MERCEDES, JAGUAR, DAIMLER/CHRYSLER "722.6" "5 Speed"

INDEX

TRANSMISSION IDENTIFICATION 3
GENERAL DESCRIPTION 7
INTERNAL COMPONENT IDENTIFICATION AND LOCATIONS 8
SOLENOID APPLICATION CHART 9
FLUID REQUIREMENTS AND CHECKING PROCEDURE 10
OIL LEVEL CONTROL 11
SOLENOID LOCATIONS AND IDENTIFICATION 12
SOLENOID OPERATION 13
ELECTRICAL CONDUCTOR PLATE 16
CASE CONNECTOR TERMINAL IDENTIFICATION 17
PARK/NEUTRAL CONTACT AND FLUID TEMP SENSOR 18
N2 AND N3 INPUT SPEED SENSORS 19
TRANSMISSION CONTROL MODULE AND LOCATIONS 20
TCM CONNECTORS AND TERMINAL IDENTIFICATION 22
SOLENOID RESISTANCE CHART 23
SHIFT LEVER ASSEMBLY 24
TRANSMISSION RANGE RECOGNITION SWITCH 26
WIRING SCHEMATICS 27
DIAGNOSTIC TROUBLE CODE DESCRIPTION 29
TORQUE CONVERTER OPERATION 34
CHECKBALL AND SMALL PARTS LOCATIONS 35
HYDRAULIC PASSAGE IDENTIFICATION 36
F-1 AND F-2 FREEWHEEL DIRECTIONS 38
TRANSMISSION DISASSEMBLY 39
COMPONENT REBUILD
- *TRANSMISSION CASE ASSEMBLY* 48
- *CONVERTER HOUSING, OIL PUMP AND B-1 CLUTCH ASSEMBLY* 49
- *K-1 CLUTCH HOUSING ASSEMBLY (INCLUDES F-1 SPRAG)* 60
- *K-2 CLUTCH HOUSING ASSEMBLY* 68
- *GEARTRAIN IDENTIFICATION AND POSSIBLE TOOTH COUNTS* 79
- *CENTER AND REAR PLANETARY GEARTRAIN ASSEMBLY (INCLUDES F-2)* 81
- *K-3 CLUTCH HOUSING ASSEMBLY* 86
- *B-2 CLUTCH HOUSING ASSEMBLY* 96
- *VALVE BODY ASSEMBLY* 102

TRANSMISSION FINAL ASSEMBLY 109
TORQUE SPECIFICATIONS 120

Note: An "Update Handbook" with the familiar Green cover, is also available from ATSG and includes much more information on the valve body variations that are found in the 722.6 transmission.

AUTOMATIC TRANSMISSION SERVICE GROUP
18635 S.W. 107 AVENUE
CUTLER BAY, FLORIDA 33157
(305) 670-4161

Copyright © ATSG 2009

INTRODUCTION

1st Printing
October, 2009

MERCEDES, JAGUAR, DAIMLER/CHRYSLER "722.6" "5 Speed"

The Mercedes 722.6 transmission made its first debut here in the United States in 1996. It is used behind 4, 6, 8 and 12 cylinder gasoline engines, as well as their diesel engines. It is their first completely computer controlled transmission and their first to have a transmission with a converter clutch. This electronically controlled 5 speed automatic transmission consists of 3 compound planetary gear sets, 3 multiple disc driving clutches, 3 multiple disc brake clutches and 2 free-wheel clutches, with 5th gear being overdrive. The Electronic Transmission Controller (ETC) controls transmission operation matching engine performance during the shift phase. The driver can choose between 2 driving programs, "S" for standard driving programs and "W" for winter driving programs. Winter option provides a second gear start and a higher gear ratio for a reverse movement. Standard mode provides a first gear take off and a lower reverse gear ratio.

Note: An "Update Handbook" with the familiar Green cover, is also available from ATSG and includes much more information on the valve body variations that are found in the 722.6 transmission.

No part of any ATSG publication may be reproduced, stored in any retrieval system or transmitted in any form or by any means, including but not limited to electronic, mechanical, photocopying, recording or otherwise, without ***written*** permission of Automatic Transmission Service Group. This includes all text illustrations, tables and charts.

We wish to send out a hearty "Thank You" to Rich Varhan at European Transmission Exchange for supplying the transmission that made this manual possible.

The information and part numbers contained in this booklet have been carefully compiled from industry sources known for their reliability, but ATSG does not guarantee its accuracy.

Copyright © ATSG 2009

WAYNE COLONNA
PRESIDENT

DALE ENGLAND
FIELD SERVICE CONSULTANT

JIM DIAL
TECHNICAL CONSULTANT

GABE DE LOS REYES
TECHNICAL CONSULTANT

ED KRUSE
TECHNICAL CONSULTANT

PETER LUBAN
TECHNICAL CONSULTANT

GREGORY LIPNICK
TECHNICAL CONSULTANT

JON GLATSTEIN
TECHNICAL CONSULTANT

DAVID CHALKER
TECHNICAL CONSULTANT

RICHARD GRAHAM
TECHNICAL CONSULTANT

ROLAND ALVAREZ
TECHNICAL CONSULTANT

GERALD CAMPBELL
TECHNICAL CONSULTANT

GREG CATANZARO
TECHNICAL CONSULTANT

AUTOMATIC TRANSMISSION SERVICE GROUP
18639 S.W. 107 AVENUE
CUTLER BAY, FLORIDA 33157
(305) 670-4161

TRANSMISSION IDENTIFICATION

To utilize the 722.6 transmission behind the diesel, and the 4, 6, 8 and 12 cylinder gas engines, different gear ratios and torque capacities are needed. Various ratios are accomplished in 2 ways:

1. ***Different size axle ratios in the rear differential.***
2. ***Different ratio planetary gear sets inside the transmission.***

Various amounts of friction and steel plates are used to accommodate the required torque capacity through different heights in the apply piston or snap ring groove location.

Should an incorrect transmission or rear axle ratio be installed into the vehicle, the computer system will observe this as a slipping transmission and produce gear ratio error codes.

Should incorrect clutch drums or pistons be used, such as a 4 cylinder set up behind a 12 cylinder engine, premature failure of the transmission will be the result.

It is for these reasons that proper identification be employed when rebuilding or exchanging this unit. To order parts from Mercedes, you ***must*** provide the VIN number.

Use Figure 1 to locate and identify the transmission designation number that is etched into a raised boss area on the left side of the transmission case. This number is matched to the engine size which determines the gear ratio and clutch capacity of the transmission. There are currently four different planetary gear ratios used in the 722.6 unit.

NAG1 identifies a family of transmissions and means "N"ew "A"utomatic "G"earbox, generation 1. Various marketing names are associated with the NAG1 family of transmissions, depending on the transmission variation being used in a specific vehicle. Some examples of the marketing names are W5A300 and W5A580. Refer to Figure 1.

Transmission and Engine designations can be identified and cross referenced to the year, model and in some cases the VIN number, for Mercedes vehicles from 1996-2001, equipped with the 722.6 transmission.

For Mercedes model years 1996-2001, refer to Figure 2 and Figure 3.

For Mercedes model years 2002-2004, refer to Figure 4.

For Daimler/Chrysler models that are equipped with the 722.6 transmission, refer to Figure 5.

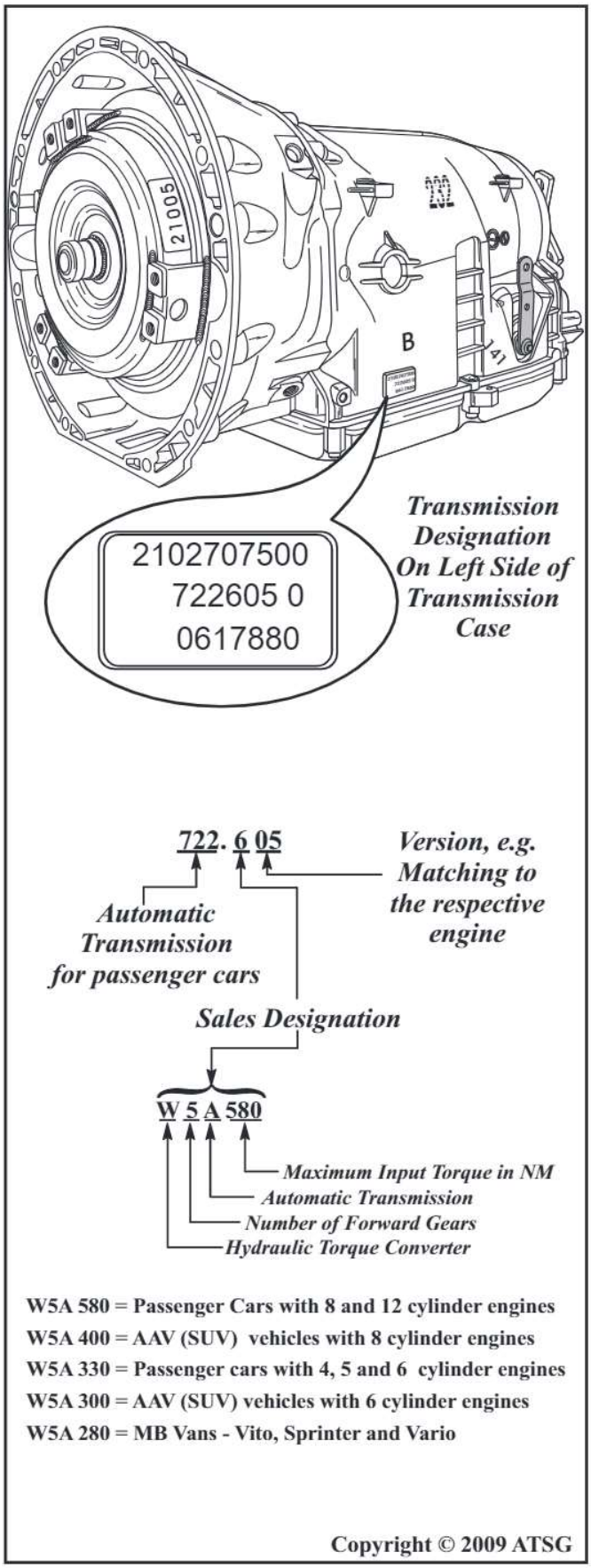

Figure 1

Vehicle Identification Number (VIN) Designation

WDB N G 70 J X Y A 123456

Manufacturer

Body (Chassis) Designation
F=129, H=202, J=210, K=170, L=208, N=220

Body Style
F=Sedan, G=Sedan Long, H=Station Wagon, J=Coupe, K=Cabriolet/Roadster, M=AMG Vehicle

Model Designation
70=S430, 75=S500

Chassis End Number

Manufacturing Plant

Model Year
S=95, T=96, V=97, W=98, X=99, Y=00, 1=01, 2=02, 3=03, 4=04,

Check Digit

Restraint System

VIN digits 4 through 7 to Chassis Designation Conversion Chart for vehicles equipped with the 722.6 Transmission up to Model Year 2001

Model	Year	Chassis	Engine	Transmission	VIN
C230	1997-1998	202.023	111.974 ME 2.1	722.600	HA23
C230	1999-2000	202.024	111.975 ME 2.1	722.600/5	HA24
C240	2001	203.061	112.912 ME 2.8	722.6	RF61
C280	1996-1997	202.028	104.941 HFM	722.604/5/629	HA28
C280	1998-1999	202.029	112.920 ME 2.0	722.606	HA29
C320	2001	203.064	112.946 ME 2.8	722.6	RF64
C36 AMG	1996-1997	202.028	104.941 HFM	722.604/5/629	HM36
C43 AMG	1998-1999	202.043	113.944 ME 2.0	722.631	
CL500 Coupe	1996-1999	140.070	119.980 ME 1.0	722.620	GA70
CL500 Coupe	2000	215.375	119.960 ME 2.0	722.6	PJ75
CL500 Coupe	2001	215.375	119.960 ME 2.8	722.633	PJ75
CL600 S600	1996-1998	140.076	102.982 ME 1.0	722.621	GA76
CLK320 Coupe	1998-2001	208.365	112.940 ME 2.0	722.607	LJ65
CLK320 Cabriole	1998-2001	208.465	112.940 ME 2.0	722.607	LK65
CLK430 Coupe	1999-2001	208.370/470	113.944/943 ME 2.0	722.607	LJ70/LK70
CLK55	2001	208.374	113.984 ME 2.8	722.6	LJ74
E300 Turbo Diesel	1998-1999	210.025	606.962 IFI	722.608	JF25
E300 Diesel	1996-1997	210.020	606.912 IFI	722.600/8	JF20
E320	1996-1997	210.055	104.995 HFM	722.605/629	JF55
E320 Sedan	1998-1999	210.065	112.995/41 ME 2.0	722.607	JF65
E320 Sedan 4 Matic	1998-1999	210.082	112.995/41 ME 2.0	722.664	JF82
E320 Wagon	1998-1999	210.265	112.995/41 ME 2.0	722.607	JH65
E320 Wagon 4 Matic	1998-1999	210.282	112.995/41 ME 2.0	722.664	JH82
E320 Sedan	2000	210.065	112.941 ME 2.8	722.607	JF65
E320 Sedan 4 Matic	2001	210.082	112.941 ME 2.8	722.664	JF82
E320 Wagon	2001	210.265	112.941 ME 2.8	722.607	JH65
E320 Wagon 4 Matic	2001	210.282	112.941 ME 2.8	722.664	JH82
E420	1996-1997	210.072	119.985 ME 1.0	722.625	JH72
E430	1998-1999	210.070	113.940 ME 2.0	722.623	JH70
E430 Sedan	2001	210.070	113.940 ME 2.8	722.623	JH65
E430 Sedan 4 Matic	2001	210.083	113.940 ME 2.8	722.623	JH82

Copyright © 2009 ATSG

Figure 2

Vehicle Identification Number (VIN) Designation

WDB N G 70 J X Y A 123456

Manufacturer

Body (Chassis) Designation
F=129, H=202, J=210, K=170, L=208, N=220

Body Style
F=Sedan, G=Sedan Long, H=Station Wagon, J=Coupe, K=Cabriolet/Roadster, M=AMG Vehicle

Model Designation
70=S430, 75=S500

Chassis End Number

Manufacturing Plant

Model Year
S=95, T=96, V=97, W=98, X=99, Y=00, 1=01, 2=02, 3=03, 4=04,

Check Digit

Restraint System

VIN digits 4 through 7 to Chassis Designation Conversion Chart for vehicles equipped with the 722.6 Transmission up to Model Year 2001

Model	Year	Chassis	Engine	Transmission	VIN
E55 AMG	1999	210.074	113.980 ME 2.0	722.623/24/636	
E55 AMG	2001	210.074	113.980 ME 2.0	722.6	JF74
ML320	1998-1999	163.154	112.942	722.662	
ML430	1999	163.172	113.942 ME 2.0	722.663	
ML55	2000	163	113 M 2.0	722.6	
S320	1997-1999	140.032	104.994 ME 2.1	722.605	GA32
S320	1997-1999	140.032 Long	104.994 ME 2.1	722.605	GA33
S420	1996-1999	140.032/43	104.9(7)81 ME 1.0	722.622/633	GA32
S430	1998-1999	140.0	113. ME 2.0	722.6	
S430	2000	220.170	113.941 ME 2.0	722.6	NG70
S430	2001	220.170	113.941 ME 2.8	722.632	NG70
S500 Coupe	1996-1998	140.070	119.970 ME 1.0	722.620	GA70
S500	1996-1999	140.051	119.9(7)80 ME 1.0	722.620/622	GA51
S500	2000	220.175	113.960 ME 2.0	722.6	NG75
S500	2001	220.175	113.960 ME 2.8	722.6	NG75
S600	1996-1999	140.057	120.982 ME 1.0	722.621	GA57
S600 Coupe	1996-1997	140.076	120.980/2 ME 1.0	722.621	
S600	2000	220.178	120.982 ME 1.0	722.621	NG78
S600	2001	220.178	137.970	722.628	NG78
SL320	1996-1997	126.063	104.991 HFM	722.603/5	FA63
SL500	1996-1998	129.067	119.9(7)82 ME 1.0	722.620	FA67
SL500	1999-2001	129.068	113.961 ME 2.0	722.620/624	FA68
SL600	1996-2001	129.076	120.983(1) ME 1.0	722.621/32	JH82
SLK230	1998-1999	170.447	111.973 ME 2.1	722.605	KK47
SLK230	2000	170.449	111.983 ME 2.1	722.616	KK49
SLK230	2001	170.449	111.983 ME 2.8	722.616	KK49
SLK320	2000	170.465	112.973 ME 2.0	722.618	KK65
SLK320	2001	170.465	112.973 ME 2.8	722.618	KK65
SLK430	1999	170.4	113. ME 2.0	722.6	KK65

Copyright © 2009 ATSG

Figure 3

MERCEDES 722.6 USAGE 2002-2004

SEDANS

C240 Sedan - 2.6L, 18 Valve, V-6 Engine.
C320 Sedan - 3.2L, 18 Valve, V-6 Engine.
C32 AMG Sedan - Supercharged SOHC 3.2L, 18 Valve, V-6 Engine.
E320 Sedan - 3.2L, 18 Valve, V-6 Engine.
E430 Sedan - 4.3L, 24 Valve, V-8 Engine.
E500 Sedan - 5.0L, 24 Valve, V-8 Engine.
E55 AMG Sedan - 5.5L, 24 Valve, V-8 Engine.
S430 Sedan - 4.3L, 24 Valve, V-8 Engine.
S500 Sedan - 5.0L, 24 Valve, V-8 Engine.
S600 Sedan - 5.5L, 24 Valve, V-12 Engine.
S600 Sedan - 5.8L, 36 Valve, V-12 Engine.
S55 AMG Sedan - 5.5L, 24 Valve, V-8 Engine.

COUPES

C230 Kompressor Sport Coupe - 1.8L, Intercooled, Supercharged DOHC, 16 Valve, L-4 Engine.
C230 Kompressor Sport Coupe - 2.3L, DOHC, 16 Valve, L-4 Engine.
CLK320 Coupe - 3.2L, 18 Valve, V-6 Engine.
CLK320 Cabriolet - 3.2L, 18 Valve, V-6 Engine.
CLK430 Coupe - 4.3L, 24 Valve, V-8 Engine.
CLK430 Cabriolet - 4.3L, 24 Valve, V-8 Engine.
CLK55 AMG Coupe - 5.5L, 24 Valve, V-8 Engine.
CLK55 AMG Cabriolet - 5.5L, 24 Valve, V-8 Engine.
CL500 Coupe - 5.0L, 24 Valve, V-8 Engine.
CL55 AMG Coupe - 5.5L, 24 Valve, V-8 Engine.
CL600 Coupe - 5.5L, 36 Valve, V-12 Engine.
CL600 Coupe - 5.8L, 36 Valve, V-12 Engine.

ROADSTERS

SLK230 Roadster - 2.3L, Intercooled, Supercharged DOHC, 16 Valve, L-4 Engine.
SLK320 Roadster - 3.2L, 18 Valve, V-6 Engine.
SLK32 AMG - 3.2L, Intercooled, Supercharged SOHC, 18 Valve, V-6 Engine.
SL500 Roadster - 5.0L, 24 Valve, V-8 Engine.
SL55 AMG - 3.2L, Intercoled, Supercharged SOHC, 18 Valve, V-6 Engine.
SL600 Roadster - 6.0L, 48 Valve, V-12 Engine.
SL500 Silver Arrow Edition - 5.0L, 24 Valve, V-8 Engine.
SL600 Silver Arrow Edition - 6.0L, 48 Valve, V-12 Engine.

WAGONS

C240 Wagon - 2.6L, 18 Valve, V-6 Engine.
C320 Wagon - 3.2L, 18 Valve, V-6 Engine.
E320 Wagon - 3.2L, 18 Valve, V-6 Engine.

LIGHT TRUCKS

ML320 Light Trucks - 3.2L, 18 Valve, V-6 Engine.
ML350 Light Trucks - 3.7L, 18 Valve, V-6 Engine.
ML500 Light Trucks - 5.0L, 24 Valve, V-8 Engine.

Copyright © 2009 ATSG

Figure 4

DAIMLER-CHRYSLER 2003-2005 USAGE

2003 MODEL YEAR			
Sprinter (VA)	*2.7L (5 cylinder) Diesel (EX9)*	*Trans Code: DGJ*	*W5A380*
2004 MODEL YEAR			
Sprinter (VA)	*2.7L (5 cylinder) Diesel (EX9)*	*Trans Code: DGJ*	*W5A380*
Crossfire (ZH)	*3.2L (6 cylinder) Gas (EGX)*	*Trans Code: DGU*	*W5A330*
2005 MODEL YEAR			
Sprinter (VA)	*2.7L (5 cylinder) Diesel (EX9)*	*Trans Code: DGJ*	*W5A380*
Chrysler 300C (LX)	*5.7L (8 cylinder) Gas (EZB)*	*Trans Code: DGJ*	*W5A580*
Dodge Magnum (LX)	*5.7L (8 cylinder) Gas (EZB)*	*Trans Code: DGJ*	*W5A580*
Grand Cherokee (WK)	*3.7L (6 cylinder) Gas (EKG)*	*Trans Code: DGJ*	*W5A580*
Grand Cherokee (WH)	*3.0L (6 cylinder) Diesel (EXL)*	*Trans Code: DGJ*	*W5J400*
Crossfire (ZH)	*3.2L (6 cylinder) Gas (EGX)*	*Trans Code: DGU*	*W5A330*

Copyright © 2009 ATSG

Figure 5

GENERAL DESCRIPTION

The Mercedes 722.6 transmission made its first debut in the United States in 1996. It is used behind 4, 6, 8 and 12 cylinder gasoline engines, as well as their diesel engines. It is their first completely computer controlled transmission and their first transmission equipped with a converter clutch. This fully electronic controlled five speed automatic transmission consists of 3 compound planetary gear sets, 3 multiple disc driving clutches, 3 multiple disc brake clutches and 2 free-wheel (sprag) clutches, with 5th gear being overdrive. The three planetary gear sets provide the five forward gear ratios and two ratios for reverse.

Changing gear ratios is fully automatic and is accomplished on the Mercedes units with the use of an Electronic Transmission Controller (ETC). On the Daimler/Chrysler units, it is referred to as a Transmission Control Module (TCM). Both of the controllers are the same and in this manual will be referred to as a Transmission Control Module (TCM), regardless of the application.

The TCM receives and monitors various electronic sensor inputs, and uses this information to shift the transmission at the optimum time and also controls line pressure.

The TCM commands shift solenoids and variable bleed Pulse Width Modulated (PWM) solenoids within the transmission to control shift timing. The TCM controls shift feel through the PWM solenoids. The TCM also controls the apply and release of the torque converter clutch which allows the engine to deliver the maximum fuel efficiency without sacrificing vehicle performance.

On Mercedes vehicles the driver can also choose between 2 driving programs, "S" for standard driving programs and "W" for winter driving programs. Winter option provides a second gear start and a higher gear ratio for a reverse movement. Standard mode provides a first gear take off and a lower reverse gear ratio.

The friction components used in this transmission consist of six multiple disc clutches. The multiple disc clutches combine with two mechanical sprag clutches, to deliver five forward gear ratios, and two reverse gear ratios, through the gearsets to the output shaft. Refer to Figure 6 for the internal component location and application chart for the 722.6 transmission.

INTERNAL COMPONENT IDENTIFICATION AND LOCATION

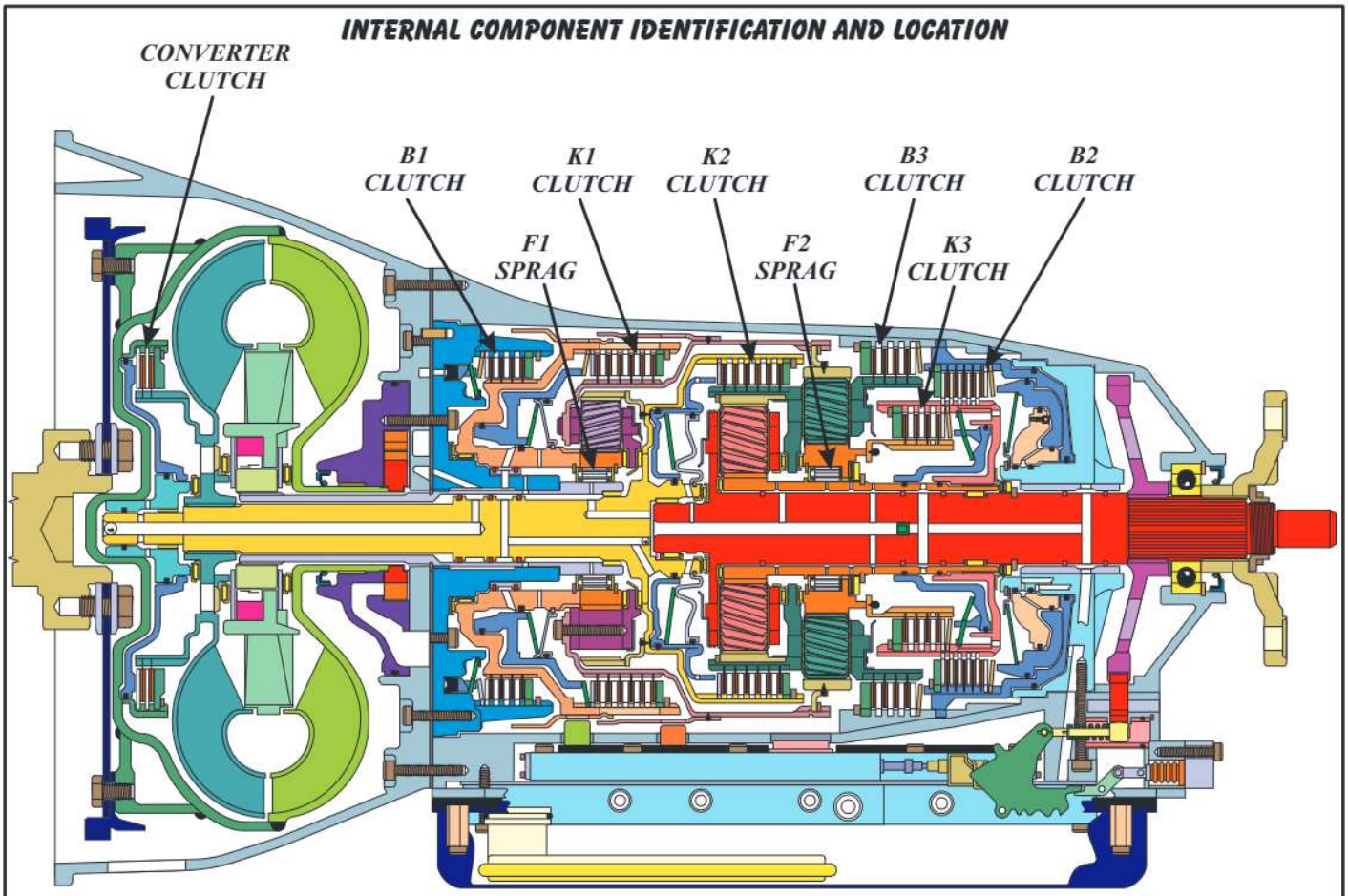

COMPONENT APPLICATION CHART

RANGE	B-1 Clutch	K-1 Clutch	K-2 Clutch	K-3 Clutch	B-3 Clutch	B-2 Clutch	F-1 Sprag	F-2 Sprag	Torq Conv Clutch	GEAR RATIO
Park	On			On						
Reverse [1]	On				On		Hold			3.16
Reverse [2]		On		On	On					1.93
Neutral	On			On						
"D"-1st	On [3]			On [3]		On	Hold	Hold		3.59
"D"-2nd		On		On [3]		On		Hold	Applied*	2.19
"D"-3rd		On	On			On			Applied*	1.41
"D"-4th		On	On	On					Applied*	1.00
"D"-5th	On		On	On			Hold [3]		Applied*	0.83

1 Mode Selector Switch in the "S" position.
2 Mode Selector Switch in the "W" position.
3 Shift components required for engine braking during coast conditions.
* TCC is available in 2nd thru 5th gear, based on throttle position, fluid temp and vehicle speed.

Copyright © 2009 ATSG

Figure 6

722.6 TRANSMISSION SOLENOID APPLICATION CHART

From the solenoid shift chart below, you will notice that shift solenoids 1-2/4-5, 2-3 and 3-4 are toggled ***"on-to-off"*** to make there respective shifts. While in gear they remain in the ***"off"*** state. This explains why, while you are driving, whatever the gear the transmission was in at the time the computer system observed a fault, that would be the gear the transmission failsafes to. When the vehicle is brought to a stop and the ignition is cycled, the transmission will remain in second gear. ***Special Note:*** If codes are stored and repairs have been made, all codes must be cleared for the limp mode feature to be turned off.

GEAR SHIFTS	SOLENOID					
	1-2/4-5 ⅄	2-3	3-4✶	MOD PC⌑	SHIFT PC ◎	TCC ⊞
1ST	OFF	OFF	OFF	PWM	OFF	OFF
SHIFT	ON	OFF	OFF	PWM	PWM	OFF
2ND	OFF	OFF	OFF	PWM	OFF	*PWM
SHIFT	OFF	ON	OFF	PWM	PWM	*PWM
3RD	OFF	OFF	OFF	PWM	OFF	*PWM
SHIFT	OFF	OFF	ON	PWM	PWM	*PWM
4TH	OFF	OFF	OFF	PWM	OFF	*PWM
SHIFT	ON	OFF	OFF	PWM	PWM	*PWM
5TH	OFF	OFF	OFF	PWM	OFF	*PWM

Additional solenoid activity observed:

⅄ ***1-2/4-5 Solenoid is pulsed during ignition crank.***

✶ ***3-4 Shift solenoid is pulsed continuously while in Park and during selector lever movement (Garage Shifts).***

⌑ ***a) Pulsed constantly while idling in Park or Neutral at approximately 40% Duty cycle.***
b) Voltage observed varied with throttle opening as well as during selector lever movement.

◎ ***a) Pulsed constantly while idling in Park or Neutral at approximately 33% Duty cycle.***
b) Voltage observed varied with throttle opening during each gear shift only.

⊞ **** The TCC solenoid is also Pulse Width Modulated and duty cycles to apply the clutch.***
**** The TCC is available in 2nd, 3rd, 4th and 5th gears, based on vehicle speed, throttle position and ATF temp.***

SHIFT GROUPS

By viewing the mechanical, hydraulic and electrical operation of a shift, it can be observed that a specific solenoid and a group of valves cause a clutch application change. This is described as a "Shift Group." A shift group has two phases. The transition from one gear to the next is called a "shift phase." Once the shift is complete and the transmission is in gear it is called the "stationary phase." There are a total of three shift groups with which 5 forward speeds are achieved. In a shift phase, a shift solenoid initiates the application of one group of valves to change the clutches required for that shift. During this time the other two groups remain in the stationary phase.

Copyright © 2009 ATSG

Figure 7

FLUID CHECKING PROCEDURE AND RECOMMENDED FLUID

Recommended Fluid...Mercedes Synthetic ATF...Part Number 001 989 21 03 10 or suitable substitute.
Daimler/Chrysler Sprinter & Crossfire....Part Number 5127382AA.
Dodge Magnum, 300C & Grand Cherokee.... Chrysler Type 4 fluid.

The Mercedes transmission does NOT come equipped with a dip stick for checking fluid level. The filler tube has a locking plug in it from the factory. When fluid level needs to be checked use a screw driver to pry the lock from the plug and remove the plug as seen below. Ensure vehicle is parked on level ground and apply the parking brake.

Purchase the dip stick from a Mercedes Benz dealer using part number 140 589 15 21 00 shown below. While in Park at idle, with fluid warm, use the **tool** to check fluid level by inserting the dip stick into the filler tube until fully seated, wait 3 seconds, then remove the dip stick and check the fluid level indication on the dip stick, as shown below.

Dipstick tool for Sprinter & Crossfire use Miller Tool 8863A, Magnum & 300C use Miller Tool 9336. Grand Cherokee comes equipped with a dipstick. Sprinter/Crossfire uses Trans fluid 5127382AA and can be topped off with no more than 1 quart of Type 4. The Dodge Magnum, 300C and the Grand Cherokee use Chrysler Type 4 fluid.

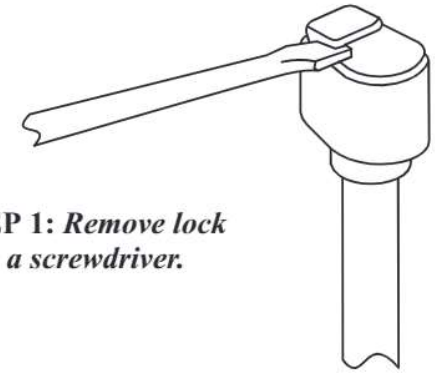

STEP 1: ***Remove lock with a screwdriver.***

STEP 2: ***Remove Plug. Part # 05093746AA for a new lock pin.***

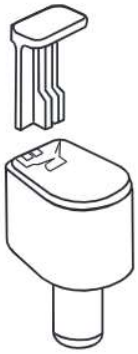

STEP 3: ***Use "Special Tool" to check fluid level, as shown below. Mercedes Part Number, 140 589 15 21 00. Sprinter & Crossfire, Chrysler Number, Miller Tool 8863B. Magnum & 300C, Chrysler Number, Miller Tool 9336. Grand Cherokee comes equipped with a dipstick..***

Approximate measurements taken from the bottom of the stick to the individual fill lines.

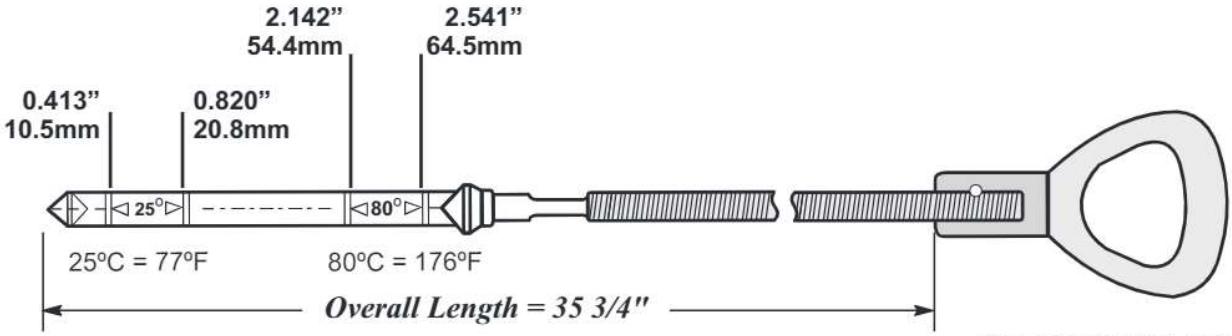

Copyright © 2009 ATSG

Figure 8

OIL LEVEL CONTROL

The oil level is controlled with a "float", that is an integral part of the valve body assembly, as shown in Figure 9. The "float" is positioned so that it can plug the opening between the transmission sump and the gearset chamber so that the rotating gearsets do not create foaming, aerate the fluid, or force it out the breather. With normal oil levels, the lubricating oil which flows constantly out of the gearset, flows back to the sump through the bottom case opening. When the oil level rises (as fluid is heated), the oil presses the "float" against the opening. The "float" therefore seperates the transmission sump from the gearset chamber. The lubricating oil which continues to flow out of the gearsets is thrown against the case wall and returns to the sump through the upper opening, as shown in Figure 9.

EFFECTS OF INCORRECT FLUID LEVEL

A low fluid level allows the oil pump to take in air along with the fluid. Air in the fluid will cause oil pressures to be low and pressures will develop slower than normal.

If the transmission is overfilled, the gearsets will churn the fluid into foam. This aerates the fluid and can cause the same conditions that occur with low fluid levels. Foaming also causes fluid expansion which can result in fluid overflow from the vent or fill tube. Fluid overflow can easily be mistaken for a leak if inspection is not done carefully.

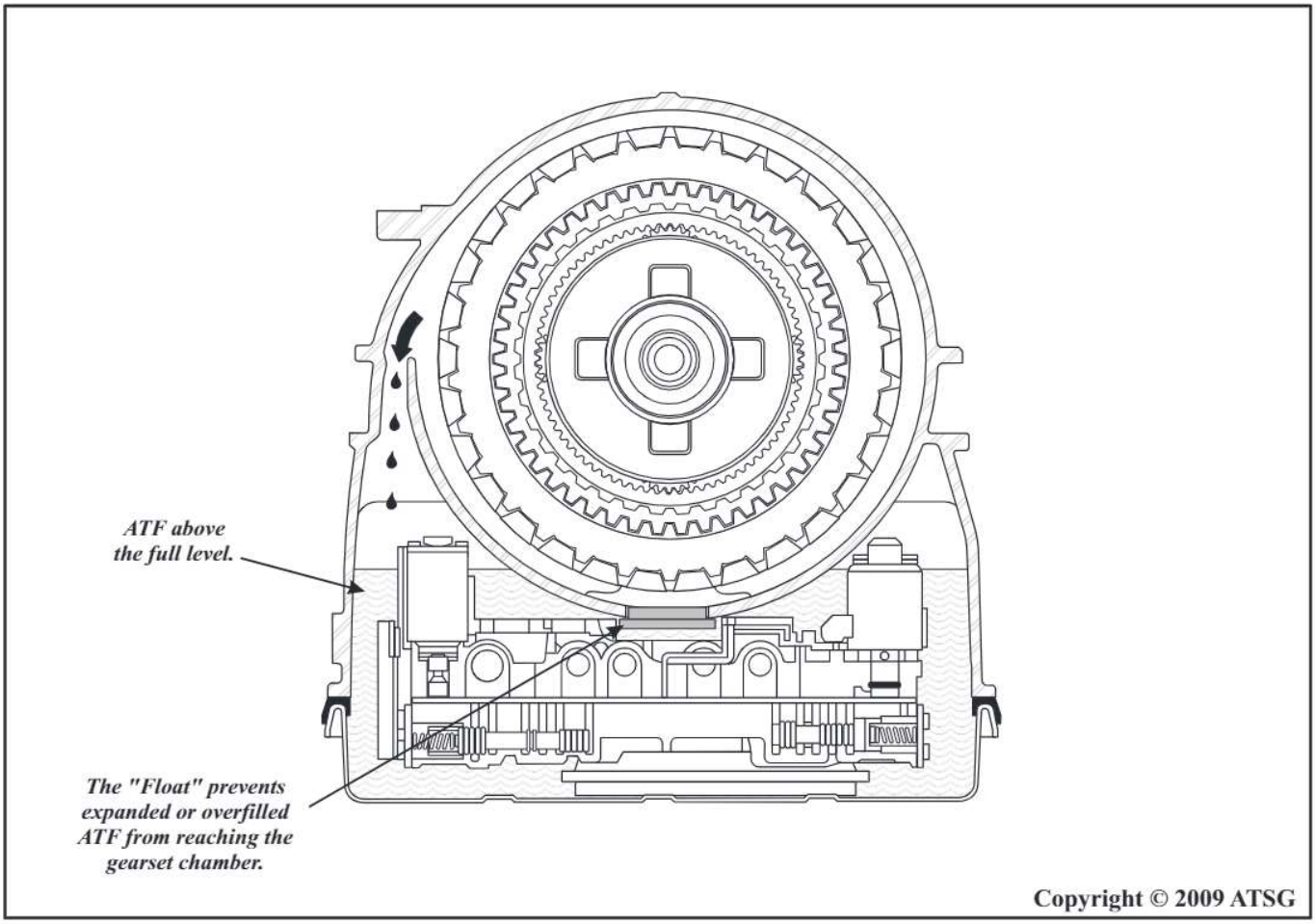

Figure 9

ELECTRONIC COMPONENTS

Solenoid Locations And Identification

All models of the 722.6 transmission use a total of six solenoids mounted on the electronic conductor plate and the valve body, as shown in Figure 10. The solenoids are located under 2 white plastic covers, also show in Figure 10. Earlier valve bodies do not have these covers. They were added to help protect the electrical connections from shorts created by metal particles that may be floating in the fluid.

These covers are not available seperately for retro-fitting. When a new conductor plate is purchased, covers should accompany the conductor plate.

The location of the "Float", that is used for oil level control is also shown in Figure 10.

Continued on Page 13

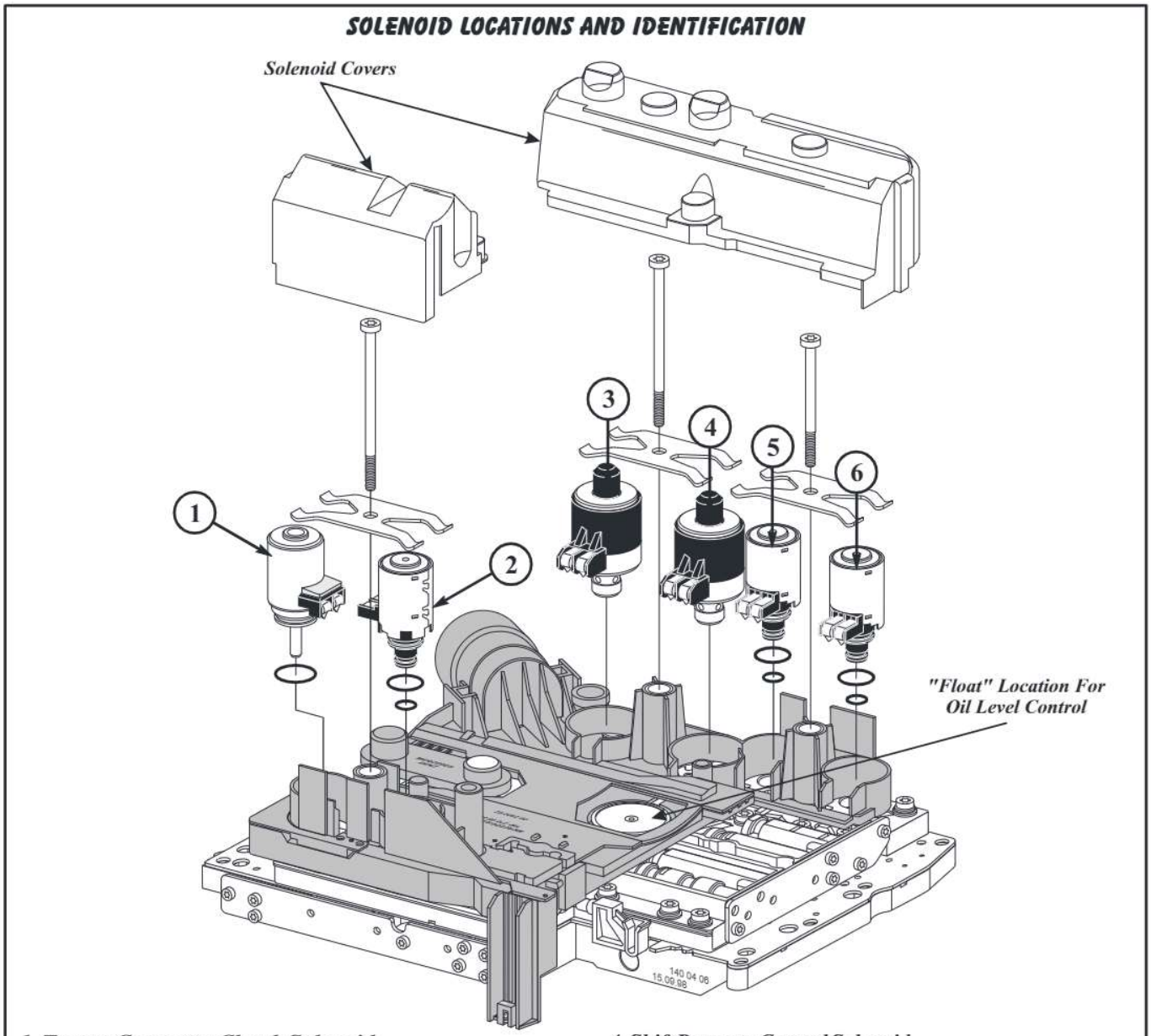

1 Torque Converter Clutch Solenoid.
2 2-3 Shift Solenoid.
3 Modulated Pressure Control Solenoid.
4 Shift Pressure Control Solenoid.
5 1-2/4-5 Shift Solenoid.
6 3-4 Shift Solenoid.

Copyright © 2009 ATSG

Figure 10

ELECTRONIC COMPONENTS (CONT'D)

Modulated Pressure Control (MPC) Solenoid Operation

The Modulated Pressure Control (MPC) Solenoid is the line pressure control solenoid which controls main line pressure rise. This solenoid is located in the electrical conductor plate, uses no "O" ring seals and relys strictly on the machined surfaces of the solenoid and the upper valve body to seal the oil pressure. This solenoid is a Pulse Width Modulated solenoid which is supplied a variable current flow from the TCM. When the solenoid is at minimum exhaust, line pressure is high. When the solenoid is at maximum exhaust, line pressure is low. The MPC Solenoid is constantly pulse-width modulating and fluctuates with throttle movement. Refer to Figure 11.

The MPC and SPC solenoids are interchangeable and work in tandem together to control holding clutch pressure as well as to assist the shift solenoids to control shift feel.

Shift Pressure Control (SPC) Solenoid Operation

The Shift Pressure Control (SPC) Solenoid regulates oil pressure to all clutch packs to control the pressure cutback during a shift, as well as the clamping force needed to prevent a clutch from slipping. This solenoid is located in the electrical conductor plate, uses no "O" ring seals and relys strictly on the machined surfaces of the solenoid and the upper valve body to seal the oil pressure. This solenoid is a Pulse Width Modulated solenoid which is supplied a variable current flow from the TCM. When the solenoid is at minimum exhaust, clutch pressure is high. When the solenoid is at maximum exhaust, clutch pressure is low. Refer to Figure 12.

The SPC and MPC solenoids are interchangeable and work in tandem together to control holding clutch pressure as well as to assist the shift solenoids to control shift feel.

Torque Converter Clutch (TCC) Solenoid Operation

The Torque Converter Clutch (TCC) Solenoid is a Pulse Width Modulated solenoid that regulates pressure to the torque converter clutch through the TCC control valve in the valve body. The TCC Solenoid is located in the electrical conductor plate, uses one "O" ring seal and also relys on machined surfaces of the bottom stem of solenoid and the valve body to seal the oil pressure. Converter clutch apply pressure is controlled in order to "ramp" the converter clutch on and off making for a smooth converter clutch apply and release. When the solenoid is at maximum exhaust, the converter clutch is released.. When solenoid is at minimum exhaust, the converter clutch is fully applied. Refer to Figure 13.

Shift Solenoid Operation

The 1-2/4-5, 2-3, and 3-4 Shift Solenoids are all "On/Off", normally closed solenoids. The shift solenoids are located in the electrical conductor plate, uses 2 "O" ring seals to seal the oil pressure. When the solenoid is "ON", it opens and transmits shift valve command pressure to the corresponding shift valve. When the solenoid is "OFF", shift valve command oil pressure is blocked. Refer to Figure 14.

The 1-2/4-5, 2-3, and 3-4 Shift Solenoids are toggled "On" to make the shift and when the shift is complete, they are toggled "Off" and remain in the "Off" state.

The three shift solenoids are also interchangeable.

Electronic Components Continued on Page 16

Copyright © 2009 ATSG

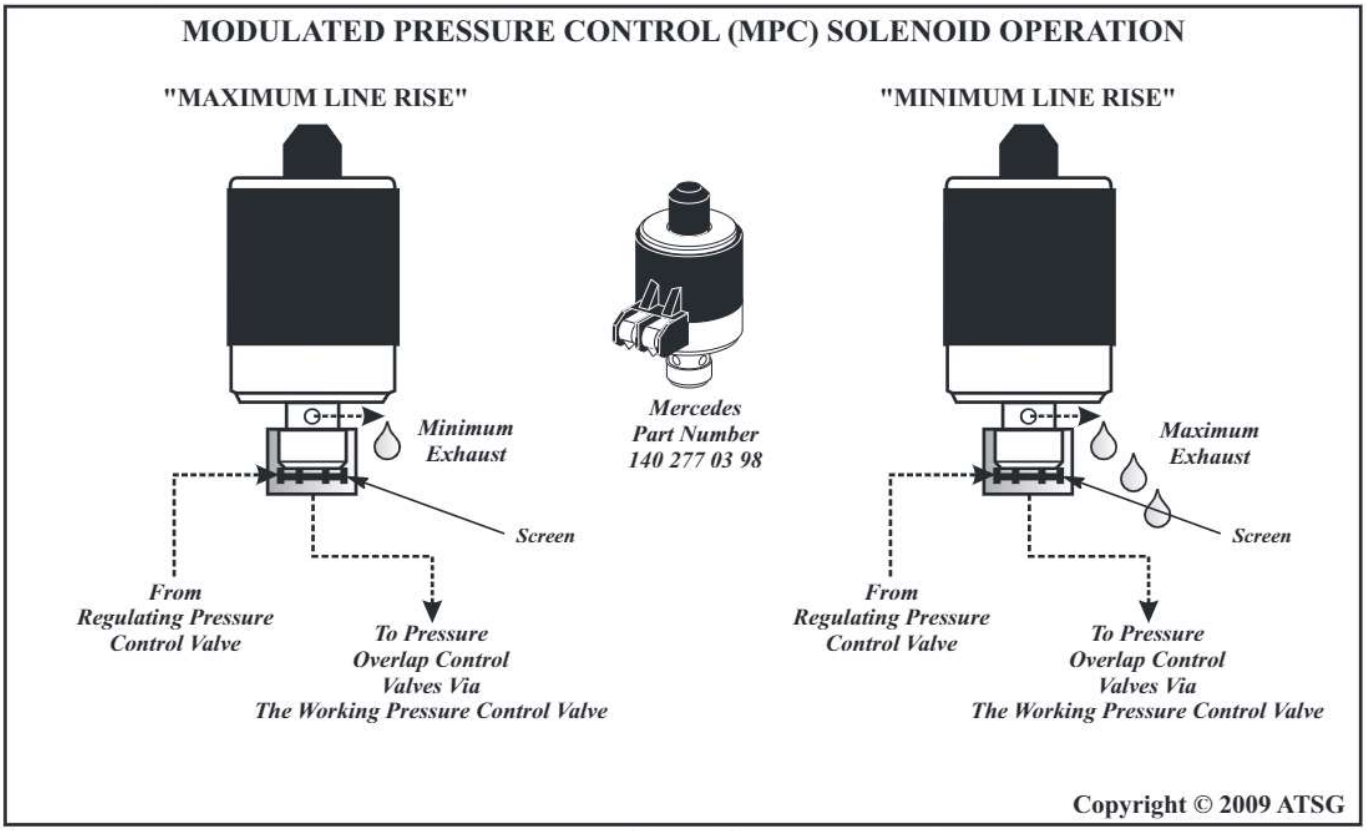

Figure 11

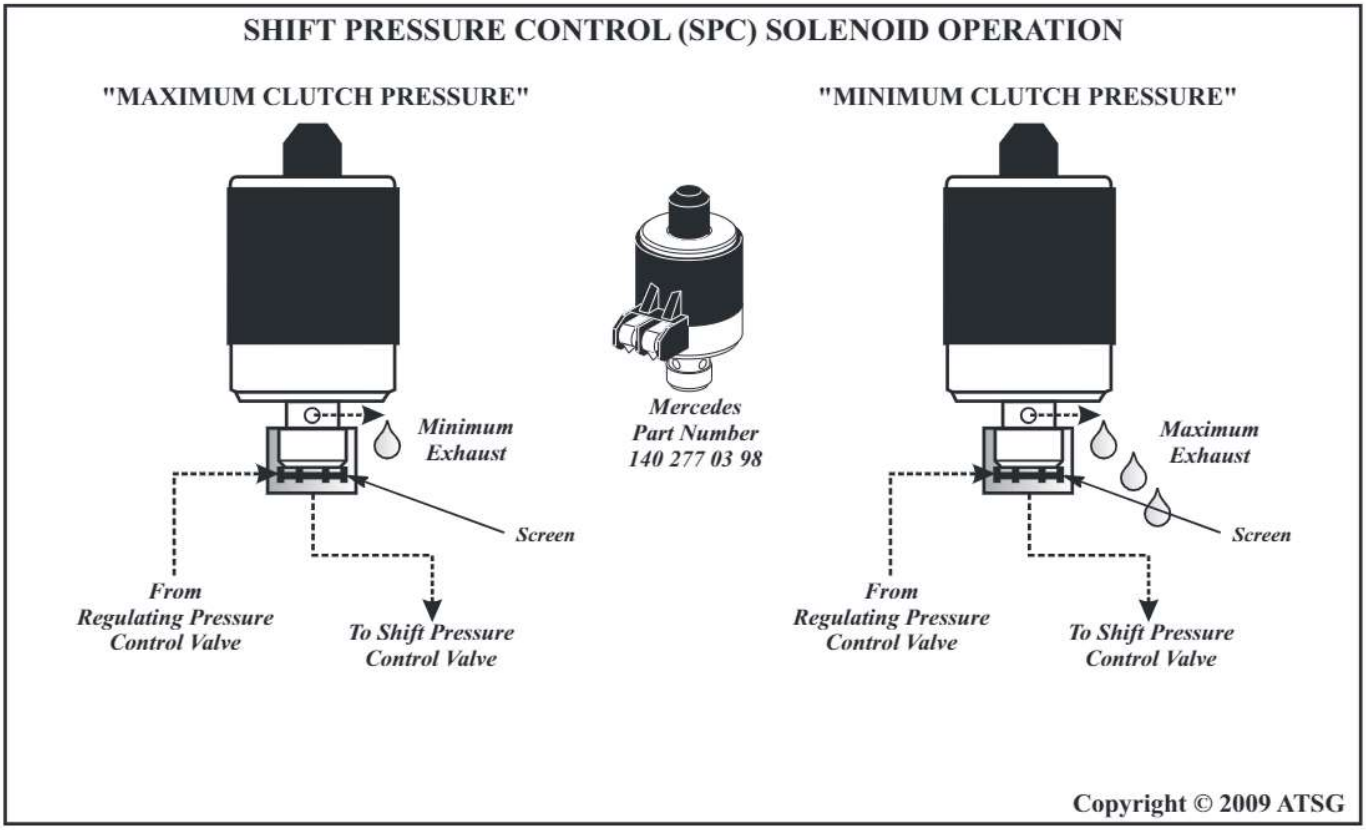

Figure 12

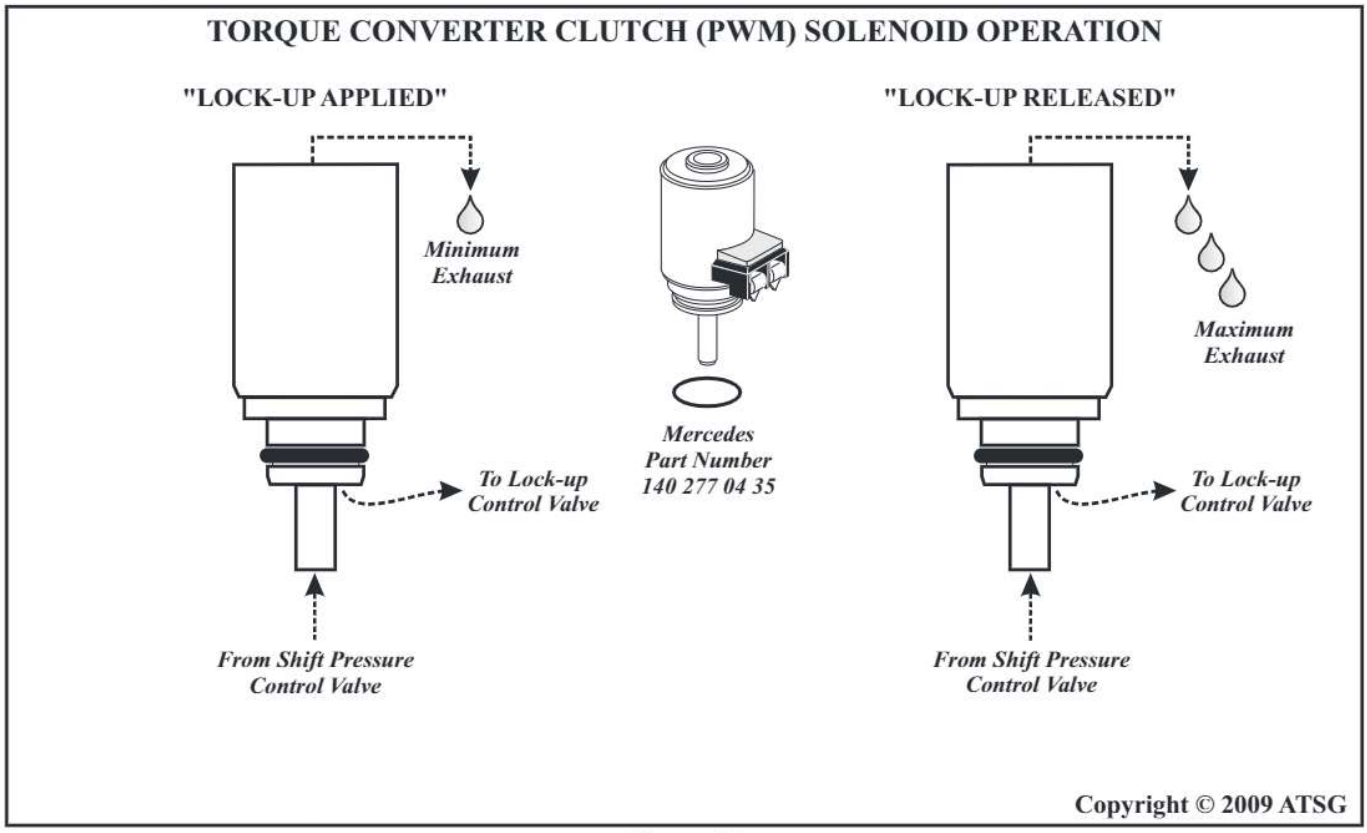

Figure 13

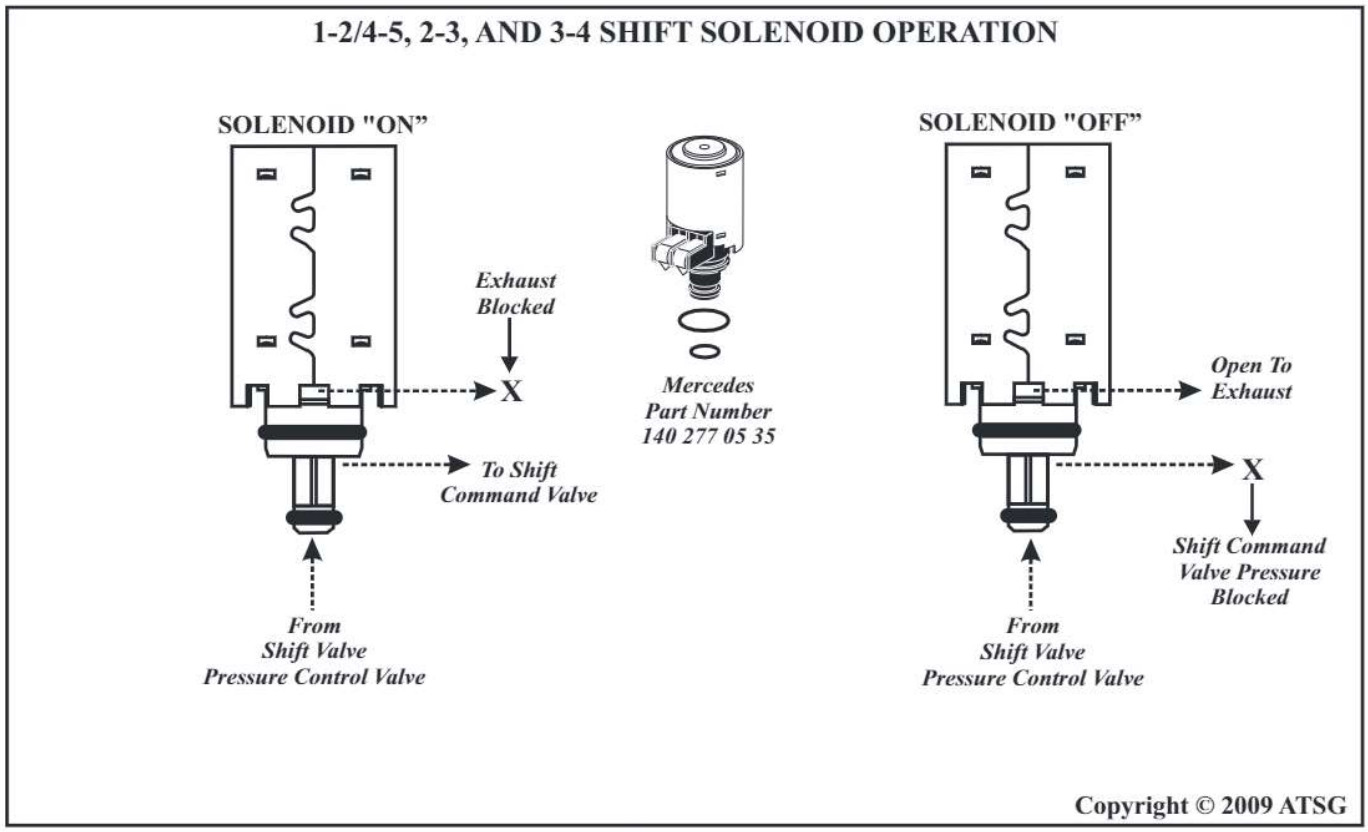

Figure 14

ELECTRONIC COMPONENTS (CONT'D)

Electrical Conductor Plate

The Electrical Conductor Plate consists of a plastic shell which houses six solenoids, all of the solenoid terminals, 2 RPM sensors, the park/neutral contact, transmission fluid temperature sensor, and a 13 pin connector that estabishes the connection to the vehicle harness and the TCM.

Conductor tracks integerated into the plastic shell connect all of the internal components to 13-way connector.

With the exception of the six solenoids, all other electronic components are integrated and part of the electrical conductor plate (See Figure 15).

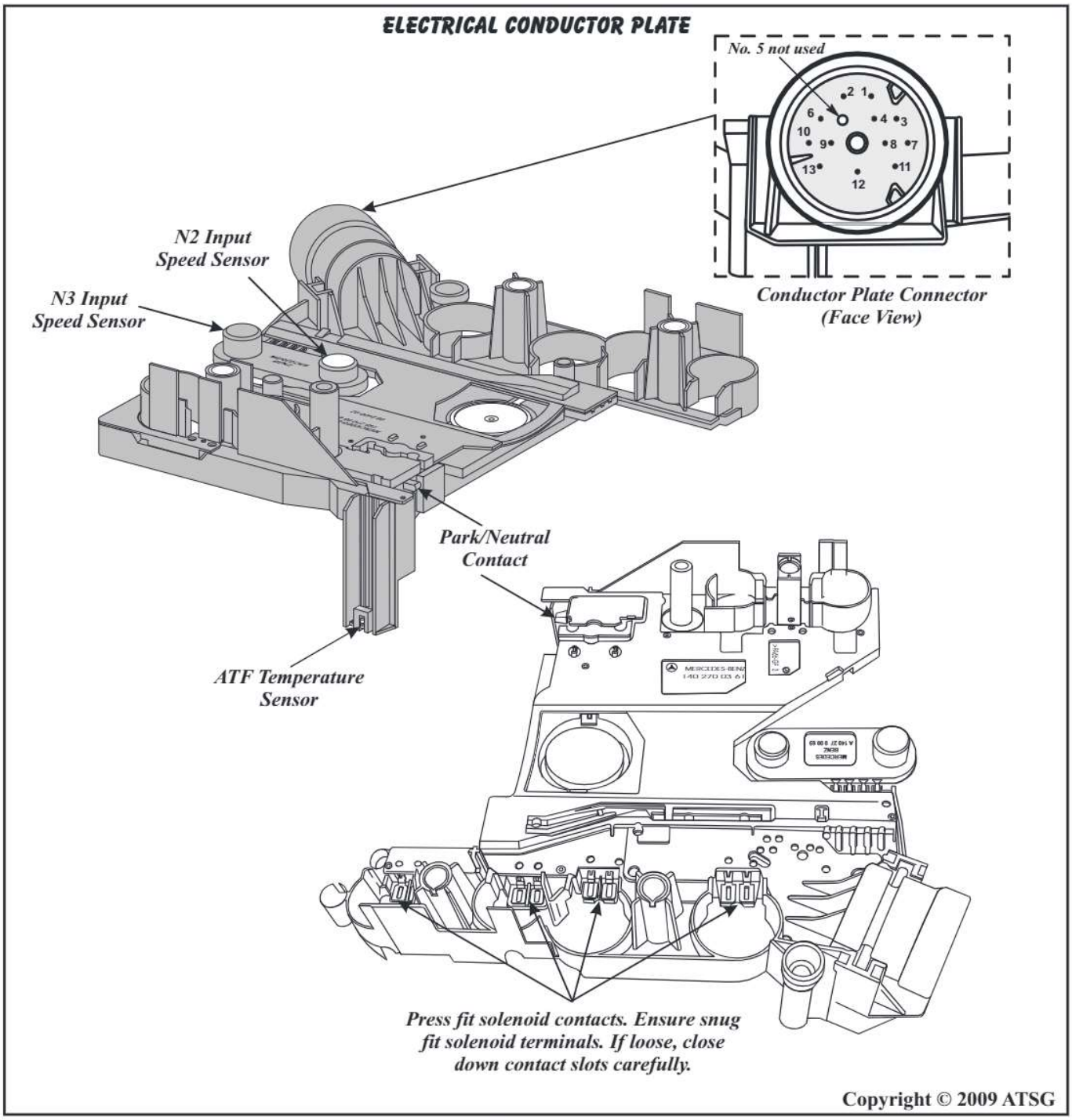

Figure 15

ELECTRONIC COMPONENTS (CONT'D)

Case Connector Terminal Identification

The case electrical connection is unique in that it has an adapter sleeve that slips over the electrical connector plate connector and sealed with two "O" ring seals, as shown in Figure 16. It is held in place with a "captured" brass screw. The vehicle harness connector then attaches with a twist and lock style connector.

Also shown in Figure 16 is the case connector terminal identification and the function of each wire going into the connector.

Electronic Components Continued on Page 18

CASE CONNECTOR IDENTIFICATION

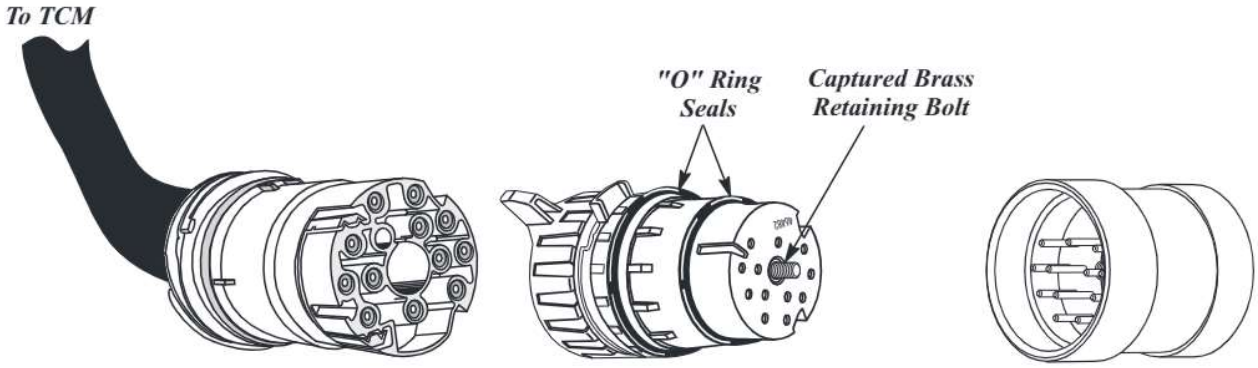

Vehicle Harness Connector — *Adapter Sleeve* — *Electrical Conductor Plate Connector*

Pin	Function
1	N3 Input Speed Sensor Signal
2	Modulation Pressure Control Solenoid Ground Control
3	N2 Input Speed Sensor Signal
4	TFT Sensor and P/N Switch Signal
5	Not Used
6	Battery Supply Voltage For All Solenoids
7	Sensor 5V Supply Voltage
8	2-3 Shift Solenoid Ground Control
9	3-4 Shift Solenoid Ground Control
10	Shift Pressure Control Solenoid Ground Control
11	TCC Solenoid Ground Control
12	Sensor Ground
13	1-2/4-5 Shift Solenoid Ground Control

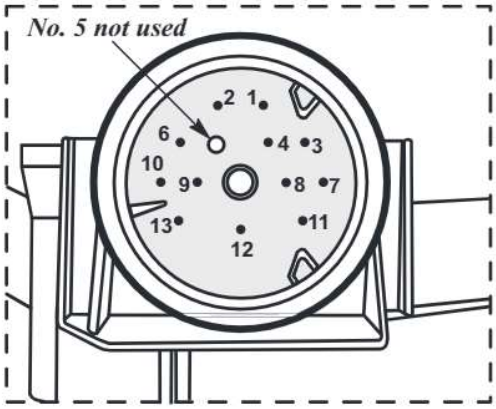

Electrical Conductor Plate Connector (Face View)

Copyright © 2009 ATSG

Figure 16

ELECTRONIC COMPONENTS (CONT'D)

Transmission Fluid Temperature Sensor

The Transmission Fluid Temperature (TFT) sensor is located in, and part of, the electrical conductor plate, as shown in Figure 17. Its purpose is to measure the fluid temp and pass that information to the TCM as an input signal. The TFT sensor is wired in series with the Park/Neutral contact. The fluid temperature signal is transferred to the TCM only when the dry-reed contact of the Park/Neutral contact is closed, when in Reverse or a forward gear position. In Park or Neutral the TCM uses engine temperature to avoid setting a DTC. Refer to the chart in Figure 18 to check the TFT using either voltage or resistance.

Note: If check is being made at the TCM, shift lever must be in Reverse or Drive, as engine temp is used in Park and Neutral.

Park/Neutral Contact

The Park/Neutral Contact is located in, and part of, the electrical conductor plate with the plunger protruding, as shown in Figure 17. Its purpose is to transfer information to the TCM as to when the selector lever is in the "P" or "N" positions. When in "P" or "N" the P/N contact is acuated by the inside detent plate. The permanent magnet is moved away from the dry-reed contact. The dry-reed contact is opened, and the TCM recieves an electrical signal that will close the signal to the starter circuit. Cut-Away of the P/N Contact is shown in Figure 17.

Electronic Components Continued on Page 19

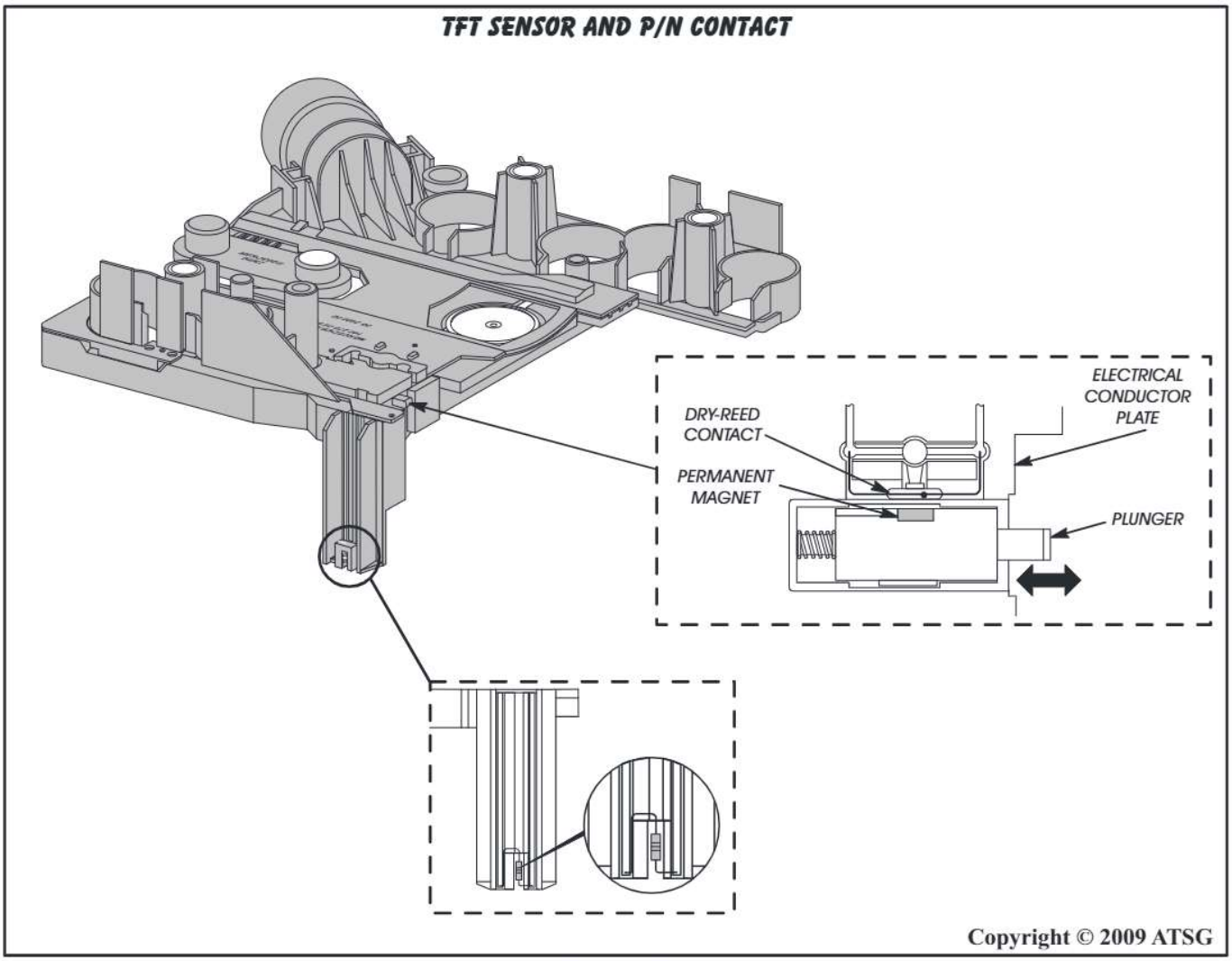

Figure 17

TFT SENSOR CHART		
ATF TEMP	VOLTAGE	RESISTANCE
-40C (-40F)	0.80	564.0
-30C (-22F)	0.88	624.0
-20C (-4F)	0.95	686.0
-10C (14F)	1.02	750.0
0C (32F)	1.09	817.0
10C (50F)	1.16	886.0
20C (68F)	1.23	957.0
30C (86F)	1.30	1032.0
40C (104F)	1.37	1109.0
50C (122F)	1.44	1189.0
60C (140F)	1.51	1273.0
70C (158F)	1.58	1306.0
80C (176F)	1.65	1450.0
90C (194F)	1.72	1545.0
100C (212F)	1.79	1644.0
110C (230F)	1.86	1747.0
120C (248F)	1.93	1855.0
130C (266F)	2.00	1968.0
140C (284F)	2.08	2087.0
150C (302F)	2.15	2211.0
160C (320F)	2.22	2276.0
170C (338F)	2.29	2479.0
		Copyright © 2009 ATSG

Figure 18

ELECTRONIC COMPONENTS (CONT'D)

N2 and N3 Input Speed Sensors

The 722.6 transmission uses 2 input speed sensors referred to as N2 and N3. Both speed sensors are located in the electrical conductor plate, as shown in Figure 19. The speed sensors are Hall Effect speed sensors that are used by the TCM to calculate the transmissions input speed. Since the input speed could not be measured directly, two of the drive elements are measured. N2 records the speed of the front sun gear and N3 records the speed of the front planetary carrier. Two input speed sensors were required because both drive elements are not active in all gears. The input sensors N2 and N3 will report the same input speed in 2nd, 3rd or 4th gear. If the N2 and N3 input speed signals are not the same in these gears, then there is an issue with the transmission and the DTC for "Input Speed Sensors Mismatch" will be set.

The N3 input speed sensor is not reported in 1st and 5th gears. The N2 input speed sensor is not reported in Reverse. The Input Speed Sensor Overspeed is a rationality check that is intended to indicate a major transmission failure and will cause a loss of drive, with transmission going to neutral.

Electronic Components Continued on Page 20

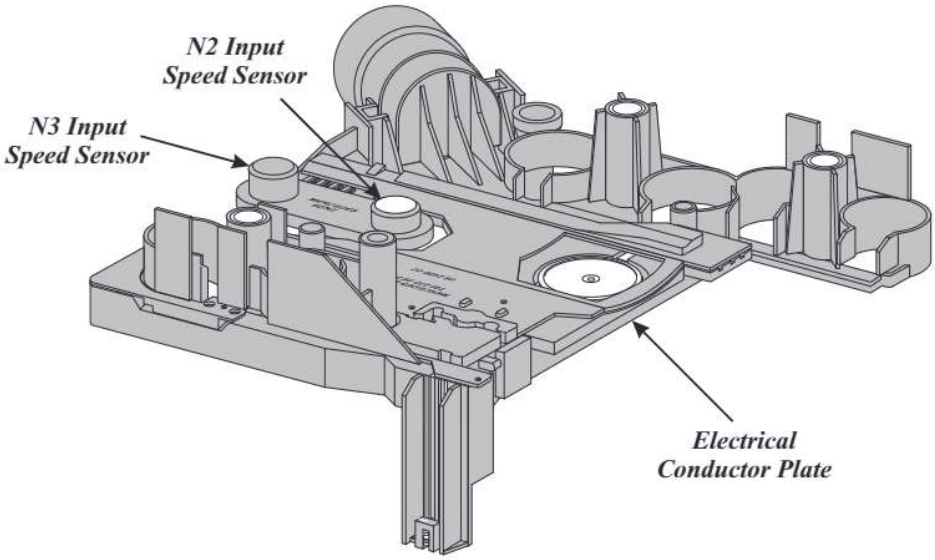

Copyright © 2009 ATSG

Figure 19

ELECTRONIC COMPONENTS (CONT'D)

Transmission Control Module (TCM)

The 722.6 electronic operated transmission is controlled by a Transmission Control Module (TCM) and has a fully adaptive control system. The system performs its functions based on real time sensor and switch feedback information. In addition the TCM recieves information from the Shift Lever Assembly (SLA), Engine Control Module (ECM) and Anti-lock Brake System (ABS) controllers over the CAN bus. The CAN bus is a high speed comunication bus that allows real time control capability between various controllers. Most messages are sent every 20 milliseconds. This allows critical information to be shared with the SLA, ECM and ABS controllers. The CAN bus uses a twisted pair of wires in the harness to reduce the potential of radio and noise interference.

The control system automatically adapts to changes in engine performance, vehicle speed, and transmission temperature variations to provide consistant shift quality. The control system ensures that clutch operation during upshifting and downshifting is more responsive without increased harshness. The TCM controls the actuation of the solenoids for modulating shift pressure and gear change. The required pressure level is calculated from the load condition and engine speed. Power for the transmission system is supplied through the Transmission Relay to the TCM.

Note: The TCM is the same type between the Mercedes and Chrysler vehicle applications, right down to the connectors and the terminal numbers. Obviously calibrations are different between the various models.

Transmission Control Module (TCM) locations for the various vehicle applications are illustrated in Figure 21.

The TCM continuously checks for electrical concerns, mechanical concerns, and some hydraulic concerns. When a transmission concern is detected, the TCM stores a Diagnostic Trouble Code (DTC). Some of these codes cause the transmission to go into "Limp-In" or Default mode. The transmission will default in the current gear if a DTC is detected, then after a key cycle, or a shift to Park, the transmission will go into "Limp-In" which is 2nd or 3rd gear, depending on model. Some DTC's may allow the transmission to resume normal operation, or recover, if the detected concern goes away.

Permanent "Limp-In" DTC will recover when the key is cycled, but if the same DTC is detected for three key cycles, the system will not recover and the DTC must be cleared from the TCM using the proper scanner. The "Typical" TCM is shown in Figure 20.

TRANSMISSION CONTROL MODULE (TCM)

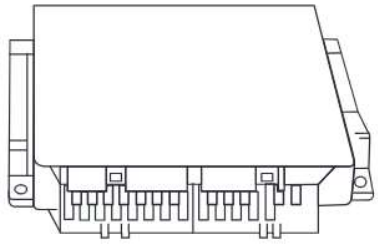

Copyright © 2009 ATSG

Figure 20

Limp Mode Operation

Certain malfunctions will cause the transmission to enter limp mode at which time a diagnostic trouble code will be stored. Should an electrical fault occur, the last selected gear will be the gear the transmission remains in until the vehicle is stopped, the engine is turned off, 10 seconds have passed and the engine is restarted. At this time 2nd gear will be hydraulically available. Some models it will be 3rd gear hydraulically available. In all situations reverse is also available.

Limp mode remains active until the malfunction is eliminated, or in some cases the key is cycled. In some cases limp mode is canceled because the fault is no longer present.

Loss of Drive

If the TCM detects a situation that has resulted in or may result in engine or transmission failure the transmission will be placed in neutral. Improper Ratio, Input Sensor Overspeed, or Engine Overspeed DTC's will create a loss of Drive.

TRANSMISSION CONTROL MODULE LOCATIONS

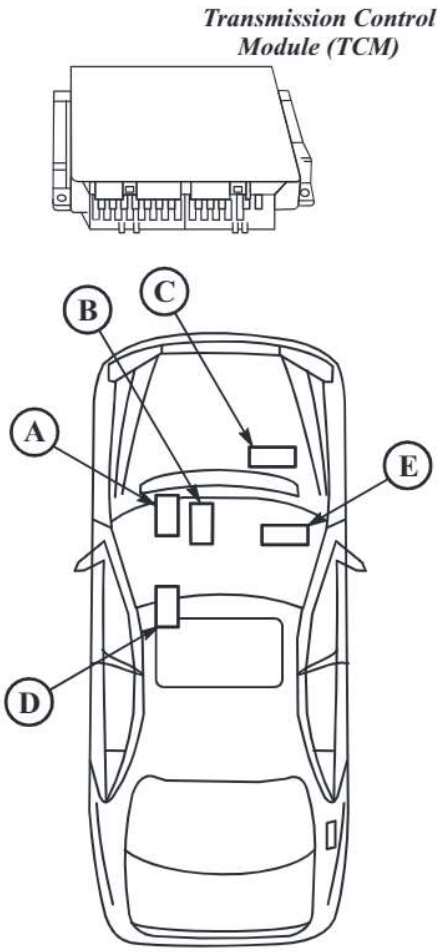

VEHICLE	TCM Location
Mercedes 163 Chasis (M Series); TCM mounted on the floor, center of the console in position "B"	B
Mercedes 140, 210 and 220 Chasis; TCM mounted in Electrical Box in engine compartment in position "C"	C
Mercedes 129, 170, 202 and 208 Chasis; TCM mounted under the passenger side floor panel in position "E"	E
Chrysler Sprinter; TCM mounted under the drivers seat in position "D"	D
Chrysler Crossfire; TCM mounted under the passenger side floor panel in position "E"	E
Dodge Magnum; TCM mounted below the steering column in position "A"	A
Chrysler 300C; TCM mounted below the steering column in position "A"	A
Grand Cherokee; TCM mounted below the steering column in position "A"	A

Copyright © 2009 ATSG

Figure 21

ELECTRICAL AND RESISTANCE CHECKS

Electrical and resistance checks can be easily as the TCM is located in one of five areas, as shown in Figure 21. The only one that is troubling for the technician is the one in the Sprinter, which is underneath the drivers seat. The TCM is small in size when compared to other control modules on board the vehicle. It measures approximately 5-1/4" X 4-1/4" X 3/4". There are two connectors which plug into the TCM and are identified in Figure 22. The face of the connectors have the terminal numbers embossed in them for circuit identification and also shown in Figure 22.

With the TCM connectors disconnected, many of the internal components can be checked for proper resistance readings. If a specific wire is a concern or needs to be inspected, continuity checks can also be easily accomplished between the TCM and the vehicle harness at the 13-way connector.

We have provided you with a chart in Figure 23 with the resistance specifications for the solenoids.

Electronic Components
Continued on Page 24

MERCEDES AND CHRYSLER TCM CONNECTOR AND TERMINAL IDENTIFICATION

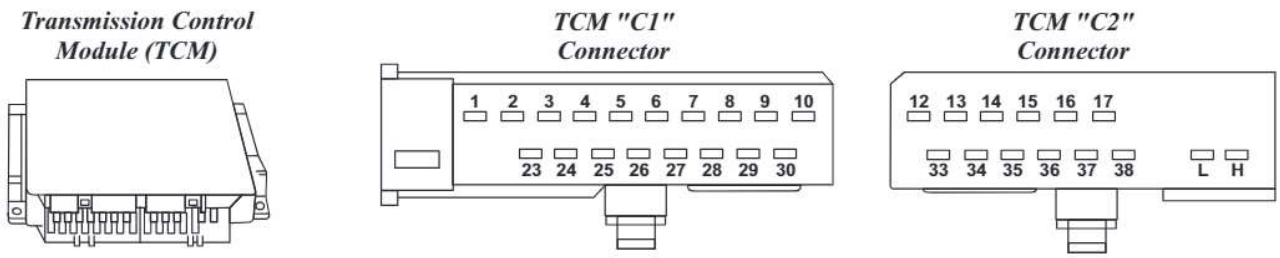

TCM		Terminal Function
Conn	Term	
C1	1	Diagnostic Output To Data Link Connector
C1	2	Kickdown Switch
C1	3	Winter/Standard Program Switch
C1	4	Reverse/Park Lock Solenoid
C1	5 & 6	Not Used
C1	7	Passenger Fuse And Relay Module Box
C1	8	Not Used
C1	9	Stop Lamp Input
C1	10	Not Used
C2	12	N2 Input Speed Sensor Signal
C2	13	Sensor 5V Voltage Supply
C2	14	1-2/4-5 Shift Solenoid Ground Signal
C2	15	3-4 Shift Solenoid Ground Signal
C2	16	2-3 Shift Solenoid Ground Signal
C2	17	TCC (PWM) Solenoid Ground Signal
C1	23 & 24	Not Used
C1	25	Transmission Range Recognition Switch (Data "A") (96-99 Only - 2000-Up They use CAN bus)
C1	26	Transmission Range Recognition Switch (Data "B") (96-99 Only - 2000-Up They use CAN bus)
C1	27	Transmission Range Recognition Switch (Data "C") (96-99 Only - 2000-Up They use CAN bus)
C1	28	Transmission Range Recognition Switch (Data "D") (96-99 Only - 2000-Up They use CAN bus)
C1	29	Transmission Control Module (TCM) Voltage Supply
C1	30	Transmission Control Module (TCM) Ground
C2	33	N2 & N3 Input Speed Sensor - TFT Sensor Ground
C2	34	TFT Temp Sensor - P/N Switch Signal
C2	35	N3 Input Speed Sensor Signal
C2	36	Modulation Pressure Control (MPC) Solenoid Ground Signal
C2	37	Shift Pressure Control (SPC) Solenoid Ground Signal
C2	38	Battery Voltage Supply to All Solenoids
C2	L	CAN Bus Data Line Low (-)
C2	H	CAN Bus Data Line High (+)

Copyright © 2009 ATSG

Figure 22

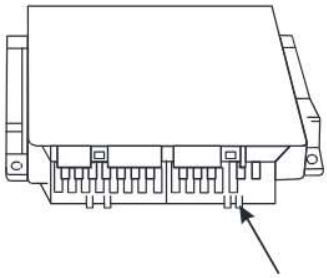

TCM "C2" Connector

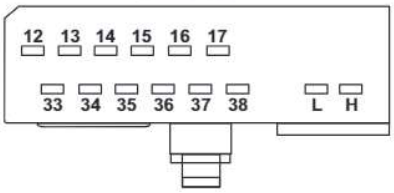

SOLENOID OHMS TEST AT THE TCM OR CASE CONNECTOR

TCM Term No's.	Component	Electrical Conductor Plate Term No's.	Resistance Specification
14 & 38	1-2/4-5 Shift Solenoid	6 & 13	2.5 - 6.5 Ohms
15 & 38	3-4 Shift Solenoid	6 & 9	2.5 - 6.5 Ohms
16 & 38	2-3 Shift Solenoid	6 & 8	2.5 - 6.5 Ohms
17 & 38	TCC (PWM) Solenoid	6 & 11	2.0 - 4.0 Ohms
36 & 38	Modulation Pressure Control (MPC) Solenoid	6 & 2	2.5 - 6.5 Ohms
37 & 38	Shift Pressure Control (SPC) Solenoid	6 & 10	2.5 - 6.5 Ohms
13 & 34	TFT Sensor	4 & 7	See Chart - Figure 18

ELECTRICAL CONDUCTOR PLATE CONNECTOR TERMINAL IDENTIFICATION

Pin	Function
1	N3 Input Speed Sensor Signal
2	Modulation Pressure Control Solenoid Ground Control
3	N2 Input Speed Sensor Signal
4	TFT Sensor and P/N Switch Signal
5	Not Used
6	Battery Supply Voltage For All Solenoids
7	Sensor 5V Supply Voltage
8	2-3 Shift Solenoid Ground Control
9	3-4 Shift Solenoid Ground Control
10	Shift Pressure Control Solenoid Ground Control
11	TCC Solenoid Ground Control
12	Sensor Ground
13	1-2/4-5 Shift Solenoid Ground Control

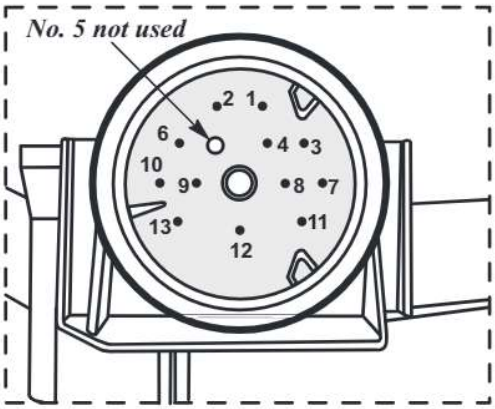

Electrical Conductor Plate Connector (Face View)

Copyright © 2009 ATSG

Figure 23

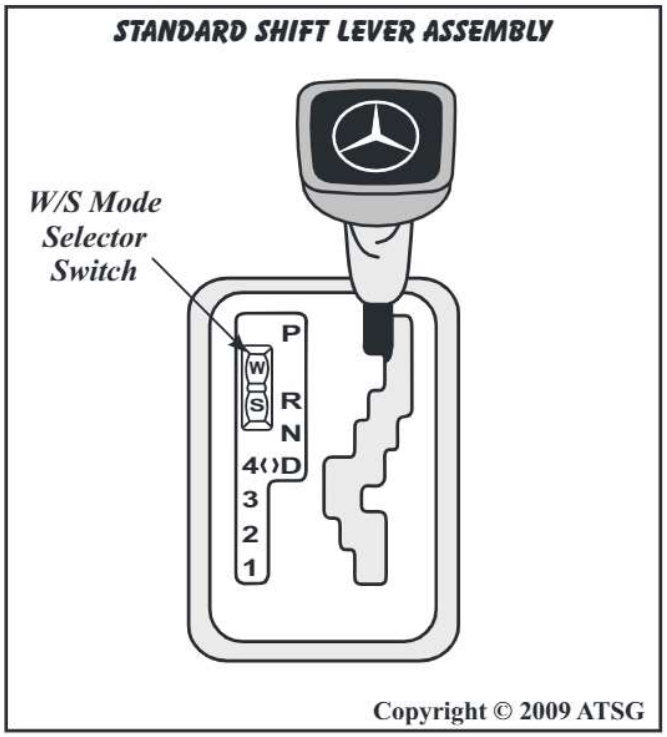

Figure 24

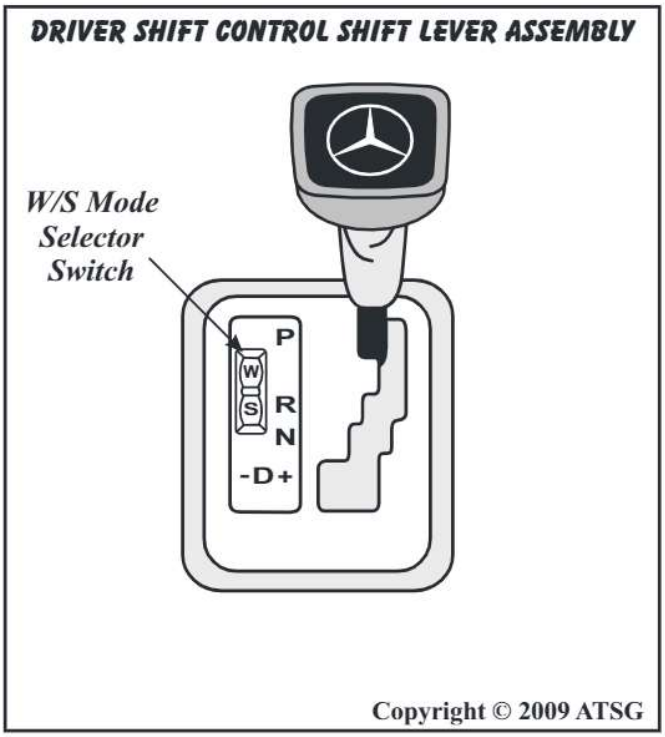

Figure 25

SHIFT LEVER ASSEMBLY

The transmission Shift Lever Assemblies vary by model. There may be four to eight different positions shown on the shift quadrants, as shown in Figure 24 and Figure 25. All are equipped with a W/S Mode Selector Switch and a Transmission Range Recognition Switch (TRRS).

W/S Mode Selector Switch Operation

"S" This is a Standard driving program which will provide a first gear start when in the 4<>D or the -D+ selector position. When the Reverse position is selected, a 3.16:1 ratio is available.

"W" This is a Winter driving program which will provide a second gear start when in the 4<>D or the -D+ selector position. When the Reverse position is selected, a 1.93:1 ratio is available. The Winter mode is to increase the probability of removing the vehicle from a stuck condition.

Vehicle Towing

If the vehicle must be flat towed, it should be done with only the "N" position selected, for a maximum towing range of 32 miles (50 km), at a maximum speed of 32 mph (50 km/h).

Standard Shift Lever Assembly

P - Park position enables the engine to be started while preventing the vehicle from moving. For safety reasons, the vehicle's parking brake should always be used in addition to the "Park" position.

R - Reverse enables the vehicle to be operated in a rearward direction.

N - Neutral position enables the engine to start and operate without driving the vehicle. If necessary, this position should be selected to restart the engine while the vehicle is moving.

4<>D - Drive range should be used for all normal driving conditions for maximum efficiency and fuel economy. Drive range allows the transmission to operate in each of the five forward gear ratios. Downshifts to a lower gear are available for safe passing, by depressing the accelerator, or by manually selecting a lower gear with the shift lever.
In this position the Driver has the option to push the lever to the left or to the right. To the right would allow a shift sequence up to 5th gear while pushed to the left side would inhibit 5th gear.

Continued on Page 25

SHIFT QUADRANTS (CONT'D)

Standard Shift Quadrant (Cont'd)

4 - Manual 4th can be selected for congested traffic and hilly terrain. It has the same 1st gear starting ratio as the "D" range, automatic shifts 1st thru 4th gear, but prevents the transmission from shifting into 5th gear.

3 - Manual 3rd can be selected for congested traffic and hilly terrain. It has the same 1st gear starting ratio as the "D" range, automatic shifts 1st thru 3rd gear, but prevents the transmission from shifting above 3rd gear.

2 - Manual 2nd just adds more performance for congested traffic and hilly terrain. It has the same starting ratio (1st gear) as the Drive range, but prevents the transmission from shifting above 2nd gear. Manual 2nd can be used to retain 2nd gear for acceleration and engine braking as desired. Manual 2nd can be selected at any vehicle speed, but will downshift into 2nd gear, only if vehicle speed is low enough not to over-rev the engine. This speed is calibrated in the TCM.

1 - Manual 1st has the same starting ratio as Drive range but prevents the transmission from shifting above 1st gear. Manual 1st can be used for heavy towing and engine braking as desired. Manual 1st can be selected at any vehicle speed but will downshift into 1st gear, only if vehicle speed is low enough not to over-rev the engine. This speed is calibrated in the TCM.

SHIFT LEVER ASSEMBLY (CONT'D)

Driver Shift Control (DSC) Shift Lever Assembly

Some vehicles are equipped with Driver Shift Control (DSC) version of the selector system, as shown in Figure 25. This configuration allows the driver to manually shift between forward gears, when the selector lever is in the **- D +** range.

P - Park position enables the engine to be started while preventing the vehicle from moving. For safety reasons, the vehicle's parking brake should always be used in addition to the "Park" position.

Driver Shift Control (DSC) Shift Lever Assembly (Cont'd)

R - Reverse enables the vehicle to be operated in a rearward direction.

N - Neutral position enables the engine to start and operate without driving the vehicle. If necessary, this position should be selected to restart the engine while the vehicle is moving.

- D + - Drive range should be used for all normal driving conditions for maximum efficiency and fuel economy. Drive range allows the transmission to upshift and downshift in each of the five forward gear ratios, according to the normal shift pattern that is programed in the TCM.

When in this range, the driver may also manually select the range of gears by tapping the selector lever towards "+" or "-" to cause an upshift or downshift, as shown in Figure 25 on Page 24. The transmission will shift up or down depending on the request that is made by tapping the selector lever.

Limp Mode Operation

Certain malfunctions will cause the transmission to enter limp mode at which time a diagnostic trouble code will be stored. Should an electrical fault occur, the last selected gear will be the gear the transmission remains in until the vehicle is stopped, the engine is turned off, 10 seconds have passed and the engine is restarted. At this time 2nd gear will be hydraulically available. Some models it will be 3rd gear hydrauically available. In all situations reverse is also available.

Limp mode remains active until the malfunction is eliminated, or in some cases the key is cycled. In some cases limp mode is canceled because the fault is no longer present.

Copyright © 2009 ATSG

ELECTRONIC COMPONENTS (CONT'D)

Transmission Range Recognition Switch (TRRS)

The Shift Lever Assembly mechanism as shown in Figure 24 and Figure 25, also contains an electrical Transmission Range Recognition Switch (TRRS) and the Park/Lock Solenoid. The TRRS informs the TCM of the shift lever position. The 1996 to 1999 models are "hard wired" to the TCM. The 2000-Up models have the TRRS signals sent to the TCM via the CAN bus system and require the proper scanner to moniter and test.

With the TRRS being an integral part of the gear Shift Lever Assembly mechanism which is located on the floor in the center console, rain water from an open sun roof, a coffee or soda spill is all it takes to damage this switch. The TRRS is a commonly failed device that produces complaints such as delayed engagements or no up-shifts. The no up-shift complaint is at times, accompanied with the TRRS switch manual low indicator light stuck on regardless of the selector lever position.

With the face plate removed, the TRRS circuit board can be easily seen. This circuit board has attached to it wires which run to a connector in the rear of the assembly. Shown in Figure 26 is a wiring diagram which could be used to assist in diagnosing the TRRS from the TCM connector. However, should the TRRS switch need to be replaced, the entire Shift Lever Assembly must be purchased.

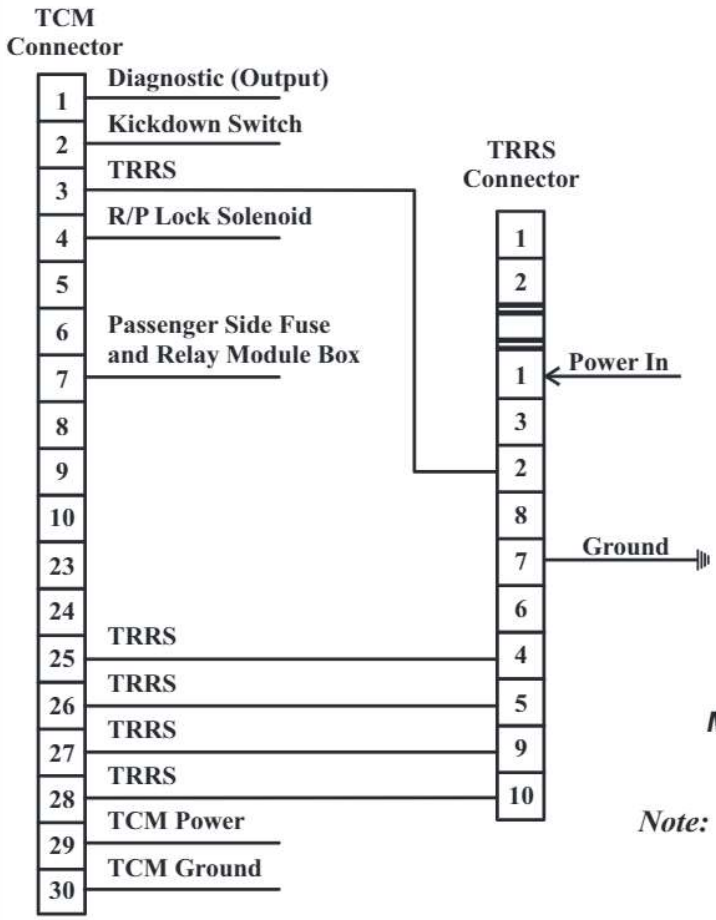

Hexadecimal Chart

Shifter Position	Approximate Voltage at the TCM Connector Pin No.			
	25	26	27	28
P	10	10	10	0
R	0	10	10	10
N	10	0	10	10
D	0	0	10	0
4	0	0	0	10
3	0	10	0	0
2	10	0	0	0
1	10	10	0	10

Measured with the TCM connector unplugged and the ignition in the "ON" position.

Note: This test applies only to 1996-1999 models. 2000-Up models require the proper scanner.

Copyright © 2009 ATSG

Figure 26

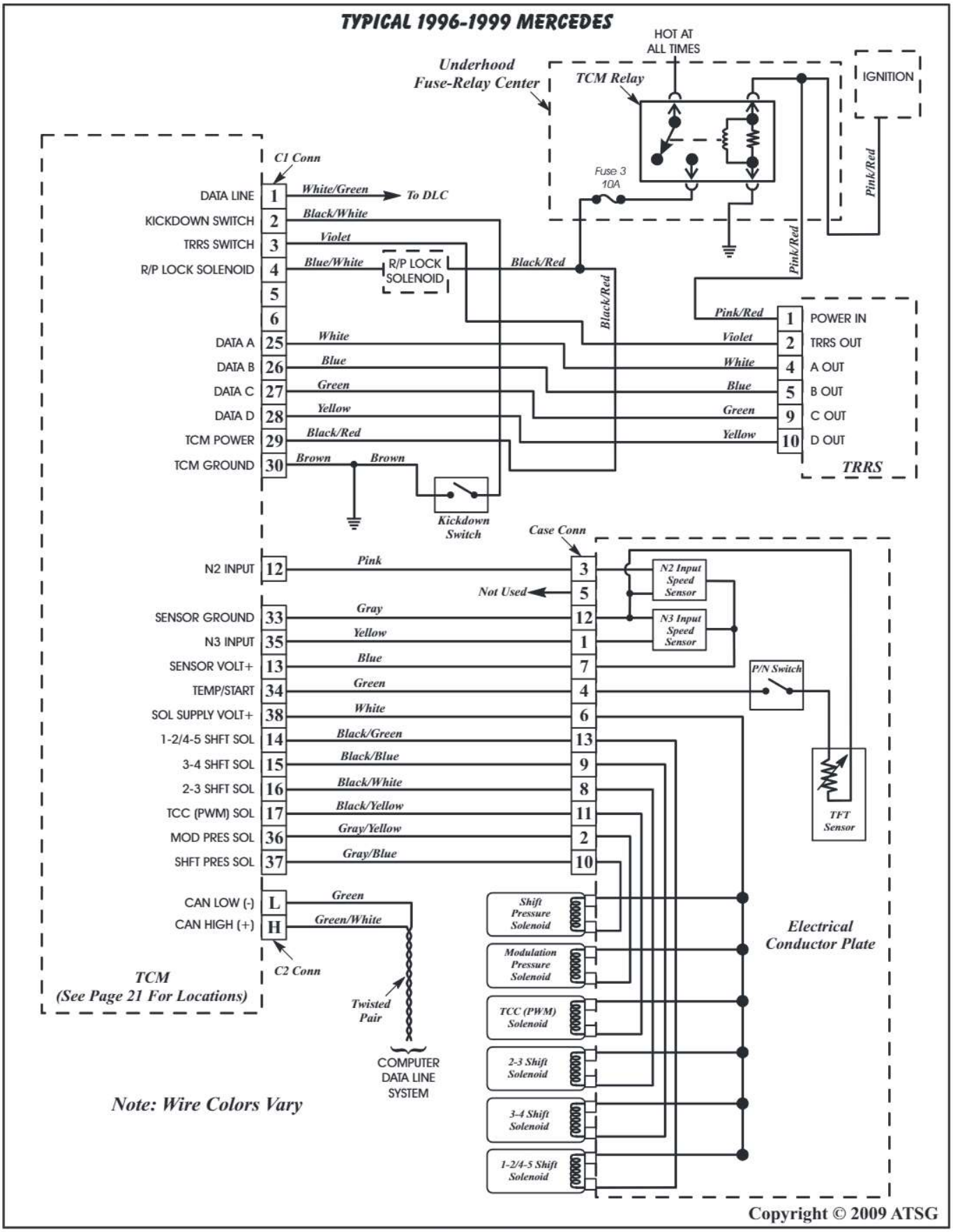
TYPICAL 1996-1999 MERCEDES
HOT AT ALL TIMES
Underhood Fuse-Relay Center
TCM Relay
IGNITION
Fuse 3 10A
Pink/Red
C1 Conn
DATA LINE 1 White/Green To DLC
KICKDOWN SWITCH 2 Black/White
TRRS SWITCH 3 Violet
R/P LOCK SOLENOID 4 Blue/White
R/P LOCK SOLENOID
Black/Red
5
6
DATA A 25 White
DATA B 26 Blue
DATA C 27 Green
DATA D 28 Yellow
TCM POWER 29 Black/Red
TCM GROUND 30 Brown Brown
Kickdown Switch
Pink/Red 1 POWER IN
Violet 2 TRRS OUT
White 4 A OUT
Blue 5 B OUT
Green 9 C OUT
Yellow 10 D OUT
TRRS
Case Conn
N2 INPUT 12 Pink 3
Not Used 5
SENSOR GROUND 33 Gray 12
N3 INPUT 35 Yellow 1
SENSOR VOLT+ 13 Blue 7
TEMP/START 34 Green 4
SOL SUPPLY VOLT+ 38 White 6
1-2/4-5 SHFT SOL 14 Black/Green 13
3-4 SHFT SOL 15 Black/Blue 9
2-3 SHFT SOL 16 Black/White 8
TCC (PWM) SOL 17 Black/Yellow 11
MOD PRES SOL 36 Gray/Yellow 2
SHFT PRES SOL 37 Gray/Blue 10
N2 Input Speed Sensor
N3 Input Speed Sensor
P/N Switch
TFT Sensor
CAN LOW (-) L Green
CAN HIGH (+) H Green/White
C2 Conn
TCM
(See Page 21 For Locations)
Twisted Pair
COMPUTER DATA LINE SYSTEM
Shift Pressure Solenoid
Modulation Pressure Solenoid
TCC (PWM) Solenoid
2-3 Shift Solenoid
3-4 Shift Solenoid
1-2/4-5 Shift Solenoid
Electrical Conductor Plate
Note: Wire Colors Vary
Copyright © 2009 ATSG

Figure 27

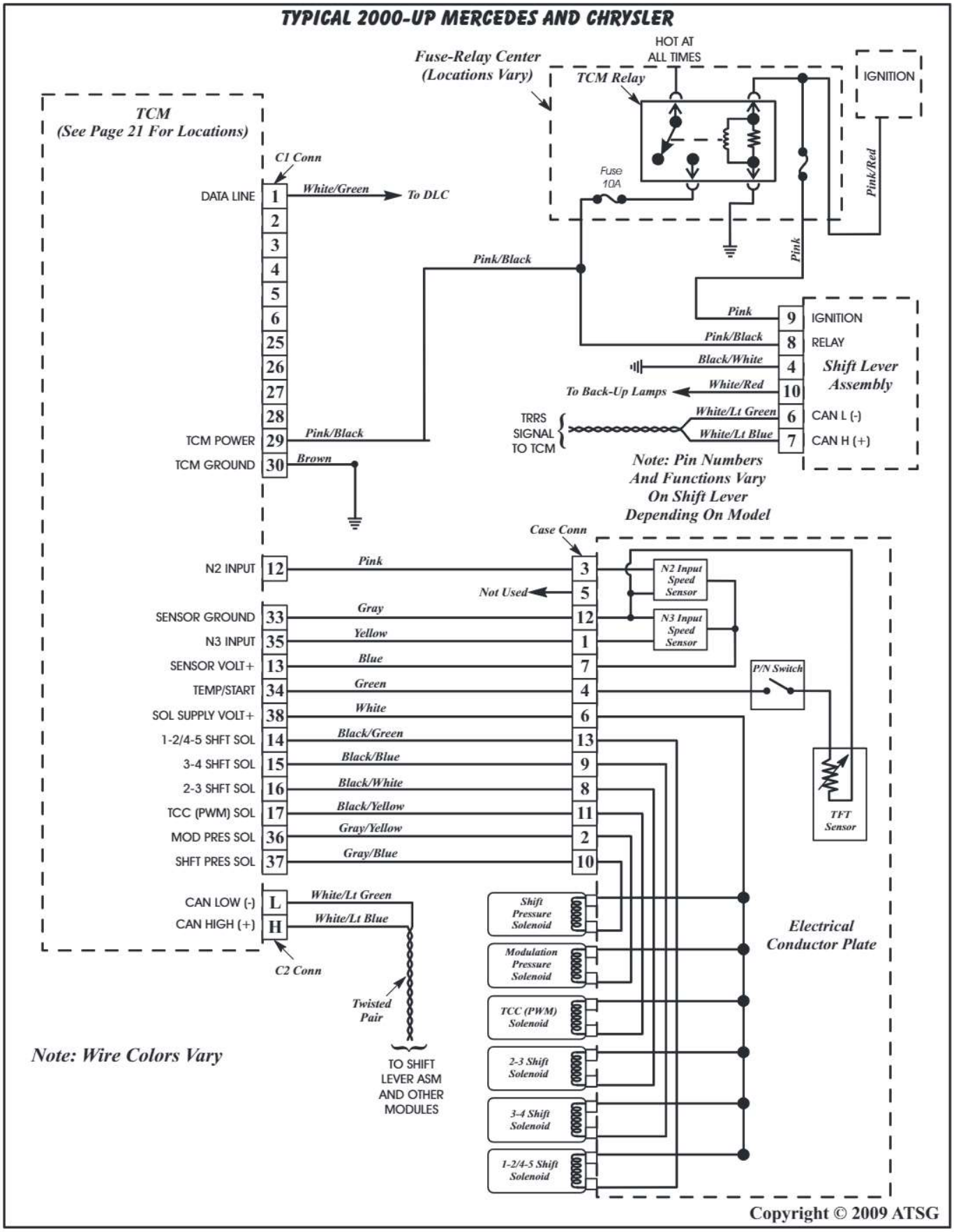
TYPICAL 2000-UP MERCEDES AND CHRYSLER
Fuse-Relay Center
(Locations Vary)
HOT AT
ALL TIMES
TCM Relay
IGNITION
Pink/Red
TCM
(See Page 21 For Locations)
C1 Conn
DATA LINE
1
White/Green
To DLC
2
3
4
5
6
25
26
27
28
TCM POWER
29
Pink/Black
TCM GROUND
30
Brown
Fuse
10A
Pink/Black
Pink
9
IGNITION
Pink/Black
8
RELAY
Black/White
4
Shift Lever
Assembly
To Back-Up Lamps
White/Red
10
TRRS
SIGNAL
TO TCM
White/Lt Green
6
CAN L (-)
White/Lt Blue
7
CAN H (+)
Note: Pin Numbers
And Functions Vary
On Shift Lever
Depending On Model
Case Conn
N2 INPUT
12
Pink
3
N2 Input
Speed
Sensor
Not Used
5
SENSOR GROUND
33
Gray
12
N3 Input
Speed
Sensor
N3 INPUT
35
Yellow
1
SENSOR VOLT+
13
Blue
7
P/N Switch
TEMP/START
34
Green
4
SOL SUPPLY VOLT+
38
White
6
1-2/4-5 SHFT SOL
14
Black/Green
13
3-4 SHFT SOL
15
Black/Blue
9
2-3 SHFT SOL
16
Black/White
8
TCC (PWM) SOL
17
Black/Yellow
11
TFT
Sensor
MOD PRES SOL
36
Gray/Yellow
2
SHFT PRES SOL
37
Gray/Blue
10
CAN LOW (-)
L
White/Lt Green
CAN HIGH (+)
H
White/Lt Blue
Shift
Pressure
Solenoid
Modulation
Pressure
Solenoid
TCC (PWM)
Solenoid
2-3 Shift
Solenoid
3-4 Shift
Solenoid
1-2/4-5 Shift
Solenoid
Electrical
Conductor Plate
C2 Conn
Twisted
Pair
TO SHIFT
LEVER ASM
AND OTHER
MODULES
Note: Wire Colors Vary
Copyright © 2009 ATSG

Figure 28

DIAGNOSTIC TROUBLE CODES (DTC'S)

We have divided the DTC charts into two different catagories. The Mercedes chart which covers "all" of their known codes, beginning on Page 30 and the Daimler/Chrysler updated OBD-II code chart beginning on Page 32.

The Shift Lever Assembly (SLA) specific codes are shown on Page 31.

The Mercedes code chart can be very confusing at times, so we have provided some "instructions" or a legend to assist you in understanding the chart.

Please read or refer to the instructions below before you go to the Mercedes code chart. The Daimler/Chrysler OBD-II code chart is a typical OBD-II code chart and they have refined the the code descriptions.

HOW TO READ THE MERCEDES DTC CHART

DTC Column

All 1 or 2 digit DTC's between 2 and 65 are actual Mercedes fault codes at the time of code retrieval.

DTC "INT" Column

All DTC codes higher than 96 are fault codes that occured previously, or Intermittently.
Example: A code 2 that occured previously would be displayed as 98 (2 + 96).

DTC OBD Column

All codes in this column are OBD II codes that are found in the U.S. only, on OBD II compliant vehicles, and are equal to the Mercedes 2 digit codes.

"Limp Mode" Column

An X in this column means that it is a code that puts the transmission in "Full Limp Mode", transmission does not shift, remains in the same gear as when the fault occured. After moving the shift lever to the Park position, cycle ignition to OFF, wait 10 seconds and restart engine. Transmission will now be in 2nd gear (3rd gear some models) and reverse will be available. To restore transmission function, if the fault is nonexistent, you must use the proper scanner to clear the codes, cycle ignition to OFF and restart engine.

An A in this column means, Limp Mode only when faults 22 and 23 occur simultaneously. With implausible input, TCM defaults to a pre-programmed, fixed, substitution value, (L/RR, R/RR = 2500 rpm).

A B in this column means, with implausible signal input, TCM defaults to a pre-programmed, fixed substitution value.

A C in this column means, with implausible signal input, TCM defaults to a variable substitution value, with loss of one rear wheel speed sensor input.

A D in this column means, with implausible signal input, TCM defaults to a variable substitution value, from other half of engine control.

An E in this column means, delayed starting.

An F in this column means, fault induces TCM to re-initalize from beginning, or reset.

"Auto Reset" Column

An X in this column means that it's a code that will automatically be eliminated, after fault condition ends.

"Key Reset" Column

An X in this column means that it is a code that can be eliminated by cycling the ignition key OFF to ON.

Copyright © 2009 ATSG

MERCEDES DIAGNOSTIC TROUBLE CODES

Code descriptions may vary due to the many updates and changes to the TCM.

DTC	DTC "INT"	DTC OBD	DTC DESCRIPTION	Limp Mode	Auto Reset	Key Reset
2	98	P0753	1-2/4-5 Shift Solenoid Circuit	X		
3	99	P0758	2-3 Shift Solenoid Circuit	X		
4	100	P0763	3-4 Shift Solenoid Circuit	X		
5	101	P0743	TCC (PWM) Solenoid Circuit	X		
6	102	P0748	Modulation Pressure Control (MPC) Solenoid Circuit	X		
7	103	P0748	Shift Pressure Control (SPC) Solenoid Circuit	X		
8	104		Reverse/Park (R/P) Solenoid Circuit			X
9	105		Starter Lockout Relay Module			X
10	106	P0702	Solenoid Supply Voltage Out Of Range	X		
11	107	P0715	N2 - N3 Sensor Supply Voltage Out Of Range	X		
12	108	P0715	RPM Sensor N2	X		
13	109	P0715	RPM Sensor N3	X		
14	110	P0715	RPM Sensor N2 To N3 Comparison implausible			
15	111	P0700	Sensor N2 Or N3 Excessive RPM			
17	113	P0705	Transmission Range Recognition Switch (TRRS) Coding Invalid			
18	114	P0705	Transmission Range Recognition Switch (TRRS) Implausible			
18	114		Selector Lever Assembly Position Implausible	X	X	
19	115		TFT Temperature Sensor	C		
20	116		P/N Contact/TFT Sensor Faulty	E		
21	117		TCM Voltage Out Of Range	X	X	
22	118	P0720	CAN: Wheel Speed Sensor, Right Rear Fault	X, A, C	X	
23	119	P0720	CAN: Wheel Speed Sensor, Left Rear Fault	X, A, C	X	
24	120		CAN: Wheel Speed Sensor, Right Front Fault, or Pedal Value Implausible		X	
25	121		CAN: Wheel Speed Sensor, Left Front Fault, or Engine RPM Implausible		X	
26	122		CAN: Accelerator Pedal Position Sensor Fault, or Eng. Torque Implausible	B	X	
27	123		Adjusted Engine or Static Engine Torque Implausible			
28	124		CAN: Engine RPM Implausible	B or D	X	
29	125		CAN: Engine Torque, Right Implausible	B or D	X	
30	126		CAN: Adjust Altitude Implemented or Traction Control Comm Error	B	X	
31	127		Engine Management Torque Implausible or Communication Error			
32	128		CAN: Engine Management Torque Implausible	B or D	X	
33	129		CAN: Throttle Valve Acutator Implausible			
34	130	P0720	CAN: TRRS Mod. (N15/5) Implemented, or Engine Management Fault			
35	131		CAN: ME 1.0, Left, Information Distorted	B or D	X	
36	132		CAN: ME 1.0, Right, Information Distorted	B	X	
36	132		Engine Coolant Temperature Implausible	B	X	
37	133		CAN: Information Totally Distorted	X, B	X	
38	134	P0720	CAN: ESP Information Distorted, or Traction Control	X, B	X	
39	135		CAN: ME 1.0, Right, Information Distorted	B or D	X	
40	136		CAN: Instrument Cluster, Communication Error			
41	137	P0700	Transfer Case Control Module, Communication Fault			
49	145	P0700	Excessive Engine RPM			
50	146	P0700	N3 Input Speed Sensor, Excessive RPM			
51	147	P0700	Engaged Gear Implausible (Transmission Slipping)			X

This Chart Continued on Page 31

Copyright © 2009 ATSG

Figure 29

MERCEDES DIAGNOSTIC TROUBLE CODES

Code descriptions may vary due to the many updates and changes to the TCM.

DTC	DTC "INT"	DTC OBD	DTC DESCRIPTION	Limp Mode	Auto Reset	Key Reset
52	148	P0700	Command Valve Stuck In Pressure Position, or TCC Stuck ON	X		X
53	149	P0740	Torque Converter Clutch Slipping	No TCC		
54	150		Confirmation Of Transmission Overload Protection Not Recieved			
55	151	P0730	Gear Recognition Repeatedly Negative	X		
56	152	P0702	Transmission Control Module (EEPROM, Incorrect Coding)	X		
57	153	P0702	Transmission Control Module (Clock)			
58	154	P0702	Transmission Control Module (Internal Watchdog Test)	X		
59	155	P0702	Transmission Control Module (External Watchdog Test)	X		
60	156	P0702	Transmission Control Module (Internal Function Watchdog)	F		
61	157	P0702	Transmission Control Module (External Function Watchdog)	F		
62	158	P0702	Transmission Control Module (RAM)	X		
63	159	P0702	Transmission Control Module (ROM)	X		
64	160	P0702	Transmission Control Module (EEPROM Critical Functions)	X		
65	161	P0702	Transmission Control Module (EEPROM Critical Functions)	B		

DATA LINK CONNECTOR (DLC) INFORMATION AND LOCATIONS

There are four different styles of Data Link Connectors, depending on year of production, vehicle model, if the vehicle is equipped with California emissions or if the vehicle is OBD-II compliant.

DLC No. 1 This DLC is located in the engine compartment and is a 16 pin diagnostic connector which will require a "Code Reader" and will produce 2 digit codes.

DLC No. 2 This DLC is located in the engine compartment, same position as DLC No.1, and is very similar in appearance. This DLC is equipped with an L.E.D. Lamp and a push button to retrieve 2 digit codes. This style connector is typically used with California emissions.

DLC No. 3 This DLC is also located in the engine compartment and is a round 38 terminal connector that requires a diagnostic code reader to retrieve 2 digit codes.

DLC No. 4 This DLC is typical 16 terminal OBD-II connector, located under the driver side dash panel. This will require the proper scanner in order to retrieve the typical OBD-II 5 digit codes.

Figure 30

DAIMLER/CHRYSLER OBD-II "SHIFT LEVER ASSEMBLY" DIAGNOSTIC TROUBLE CODES

DTC	DESCRIPTION
P0562	Battery Voltage Low
P0563	Battery Voltage High
P0607	TCM Internal Performance
P0930	Brake Transmission Shift Interlock (BTSI) Control Circuit Low
P0931	Brake Transmission Shift Interlock (BTSI) Control Circuit High
P2775	Autostick Upshift Switch Circuit Performance
P2779	Autostick Downshift Switch Circuit Performance

Copyright © 2009 ATSG

Figure 31

DAIMLER/CHRYSLER OBD-II DIAGNOSTIC TROUBLE CODES	
DTC	**DESCRIPTION**
P0100	Mass Air Flow Sensor Circuit Fault
P0105	Manifold Absolute Pressure Sensor Circuit Fault
P0110	Intake Air Temperature Sensor Circuit Fault
P0115	Engine Coolant Temperature Sensor Circuit Fault
P0120	Throttle Position Sensor Circuit Fault
P0219	Engine Overspeed
P0560	System Voltage Malfunction
P0562	Battery Voltage Low
P0563	Battery Voltage High
P0602	TCM Programming Error or Not Programmed
P0604	TCM Internal RAM
P0605	TCM Internal ROM
P0613	TCM Internal Processor
P0642	Sensor Reference Voltage 1 Circuit Low
P0643	Sensor Reference Voltage 1 Circuit High
P0657	Solenoid Supply Voltage Circuit
P0700	Transmission Control System Malfunction
P0702	Transmission Control System Electrical Malfunction
P0710	Transmission Fluid Temperature Sensor Circuit
P0712	Transmission Fluid Temperature Sensor Low
P0714	Transmission Fluid Temperature Sensor Intermittent
P0717	N2 Input Speed Sensor Circuit, No Signal
P0730	Incorrect Gear Ratio
P0731	Gear Ratio Error 1st Gear
P0732	Gear Ratio Error 2nd Gear
P0733	Gear Ratio Error 3rd Gear
P0734	Gear Ratio Error 4th Gear
P0735	Gear Ratio Error 5th Gear
P0740	Torque Converter Clutch Malfunction
P0742	Torque Converter Clutch Stuck ON
P0743	TCC Solenoid Circuit
P0748	Modulation Pressure Control (MPC) Solenoid Circuit
P0752	1-2/4-5 Shift Solenoid
P0753	1-2/4-5 Shift Solenoid Circuit
P0758	2-3 Shift Solenoid, or Circuit
P0762	3-4 Shift Solenoid
P0763	3-4 Shift Solenoid Circuit
P0778	Shift Pressure Control (SPC) Solenoid Circuit
P1629	TCM Internal, Solenoid Supply/Watchdog
P1631	TCM Internal, Processor Clock Performance
P1632	TCM Internal, Test Internal Watchdog Performance
P1633	TCM Internal, Test External Watchdog Performance
P1634	TCM Internal, Internal Watchdog Performance
P1636	TCM Internal, External Watchdog Performance
P1637	TCM Internal, EEPROM Performance

This Chart Continued on Page 33

Copyright © 2009 ATSG

Figure 32

DAIMLER/CHRYSLER OBD-II DIAGNOSTIC TROUBLE CODES	
DTC	**DESCRIPTION**
P1638	TCM Internal, CAN 1 RAM Performance
P1639	TCM Internal, CAN 2 RAM Performance
P1644	Incorrect Variant Configuration
P1704	N2 Input Speed Sensor Overspeed
P1705	N3 Input Speed Sensor Overspeed
P1731	Incorrect Gear Engaged
P1747	CAN Signal From TCM Failure
P2638	Torque Management Feedback Signal Performance
P2767	N3 Input Speed Sensor Circuit, No Signal
P2783	Torque Converter Temperature Too High
P2784	Input Speed Sensor N2 & N3 Correlation
U0002	CAN C Bus Off Performance
U0100	Lost Comunication With ECM/PCM
U0103	Lost Comunication With Electronic Gear Shift Module
U0121	Lost Comunication With ABS Module
U0141	Lost Comunication With Front Control Module
U0155	Lost Comunication With Instrument Cluster
U0164	Lost Comunication With HVAC Control Module
U0401	Implausible Data Recieved From ECM/PCM
U0404	Implausible Data Recieved From ESM
U0415	Implausible Data Recieved From ABS Module
U0423	Implausible Data Recieved From Instrument Cluster
U0424	Implausible Data Recieved From HVAC Control Module
U0431	Implausible Data Recieved From Front Control Module
U110B	Lost Engine Coolant Message
U1118	Lost Engine Message
U1119	Lost Front Control Module Message
U1400	Implausible TPS Signal Recieved
U1401	Implausible Engine Speed Signal Recieved
U1402	Implausible Engine Temperature Signal Recieved
U1404	Implausible Static Engine Torque Signal Recieved
U1405	Implausible Minimum Engine Torque Signal Recieved
U1406	Implausible Maximum Engine Torque Signal Recieved
U1407	Implausible Engine Torque Request Signal Recieved
U1408	Implausible Brake Signal Recieved
U1409	Implausible Left Front Wheel Speed Signal Recieved
U140A	Implausible Right Front Wheel Speed Signal Recieved
U140B	Implausible Left Rear Wheel Speed Signal Recieved
U140C	Implausible Right Rear Wheel Speed Signal Recieved
U140D	Implausible Wheel Speed Signals Recieved
U140F	Implausible Engine Variant Data
U1410	Implausible or Missing Front Control Module Variant Data
U1507	Implausible Engine Temperature Data Length Recieved
U1509	Implausible Engine Variant Message Data Length Recieved
U150A	Implausible Front Control Module Variant Message Data Length Recieved

Copyright © 2009 ATSG

Figure 33

TCC HYDRAULIC OPERATION

The Torque Converter is uniquely constructed in that the converter clutch apply circuit is independent to the converter in and out fluid. Additionally, the converter could contain either 1 or 2 friction plates depending on the size of the engine .

Figure 34 below, illustrates how the converter clutch apply piston contours to the flywheel side of the torque converter cover. The friction plates lug to a hub splined to the turbine shaft while the steel plates lug to the converter cover. When the clutch is commanded on, apply fluid is fed through the center of the turbine shaft and fills the area between the converter cover and piston. The piston applies the friction plates to the steel plates locking the turbine shaft to the cover.

Converter fill is fed into the converter between the converter hub that drives the pump gears and the stator shaft. The fluid's return path is between the stator shaft and turbine shaft.

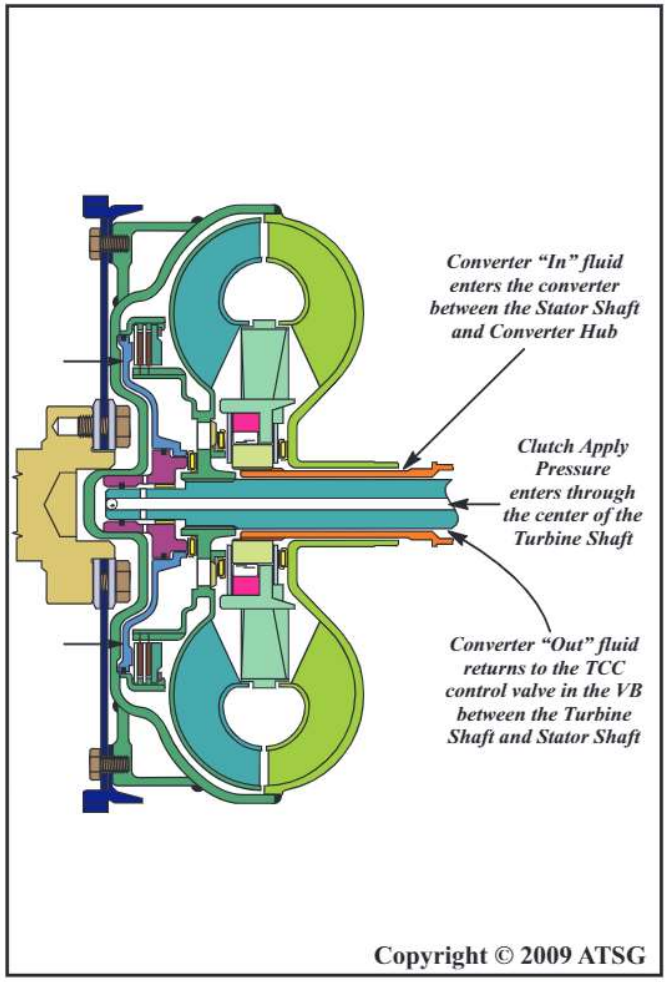

Figure 34

TCC ELECTRONIC OPERATION

The TCM controls the converter clutch apply with Electronic Modulated Converter Clutch (EMCC) software using the TCC (PWM) solenoid and the TCC valve in the valve body. There are four output logic states that can be applied as follows;

- ***No EMCC***
- ***Partial EMCC***
- ***Full EMCC***
- ***Gradual-To-No EMCC***

No EMCC

Under "No EMCC" conditions, the TCC (PWM) solenoid is OFF. There are several conditions that can result in "No EMCC" operations. It can be iniated due to a fault in the transmission or because the TCM does not see the need for EMCC under current driving conditions.

Partial EMCC

Partial EMCC operation modulates the TCC (PWM) solenoid (duty-cycle) to obtain partial converter clutch application. Partial EMCC is maintained until Full EMCC is called for and actuated. During Partial EMCC some slip does occur. Partial EMCC will usually occur at low vehicle speeds, low load and light throttle situations.

Full EMCC

During Full EMCC operation, the TCM increases the TCC (PWM) solenoid duty-cycle to full ON, after Partial EMCC brings the engine speed within the desired slip range of transmission input speed in relation to engine rpm.

Gradual-To-No EMCC

This operation is to soften the change from Full or Partial EMCC to No EMCC. This is done at mid-throttle by decreasing the TCC (PWM) solenoid duty-cycle.

CHECK BALL LOCATION AND IDENTIFICATION

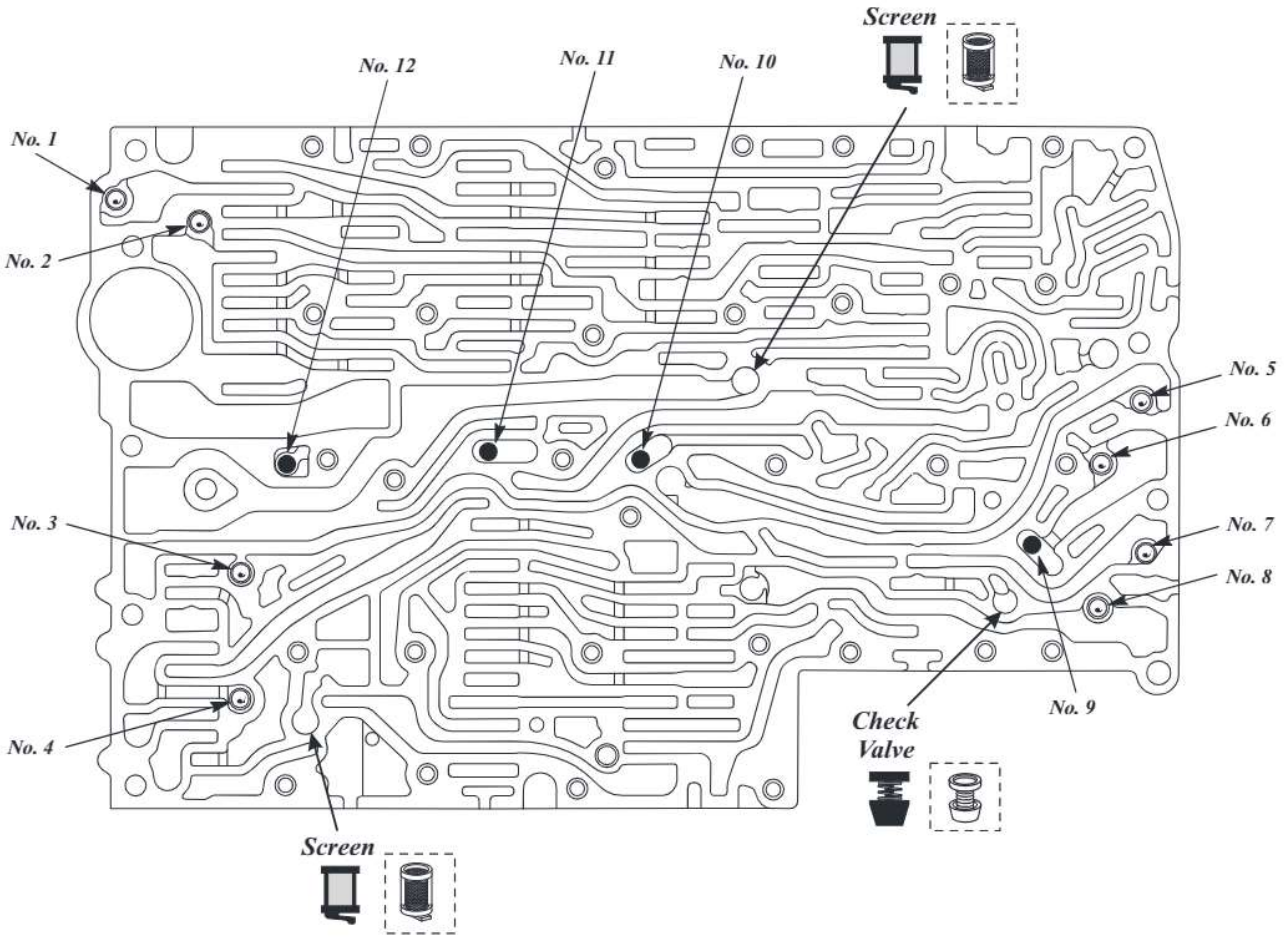

Number	Function	Size	Material
1	K1 Clutch Exhaust	5.4 MM (.215")	Steel
2	B1 Clutch Exhaust	5.4 MM (.215")	Steel
3	K2 Clutch Exhaust	5.4 MM (.215")	Steel
4	Torque Converter Clutch	5.4 MM (.215")	Steel
5	B2 Clutch Exhaust	5.4 MM (.215")	Steel
6	K3 Clutch Exhaust	5.4 MM (.215")	Steel
7	B2 Clutch Counter Exhaust	5.4 MM (.215")	Steel
8	B3 Clutch Exhaust	5.4 MM (.215")	Steel
9	K3 Shuttle Ball	5.4 MM (.215")	Plastic
10	3-4 Shift Group Shuttle Ball	5.4 MM (.215")	Plastic
11	Pressure Reducing Shuttle Ball	5.4 MM (.215")	Plastic
12	Modulator Pressure Shuttle Ball	5.4 MM (.215")	Plastic

Copyright © 2009 ATSG

Figure 35

CASE PASSAGE IDENTIFICATION

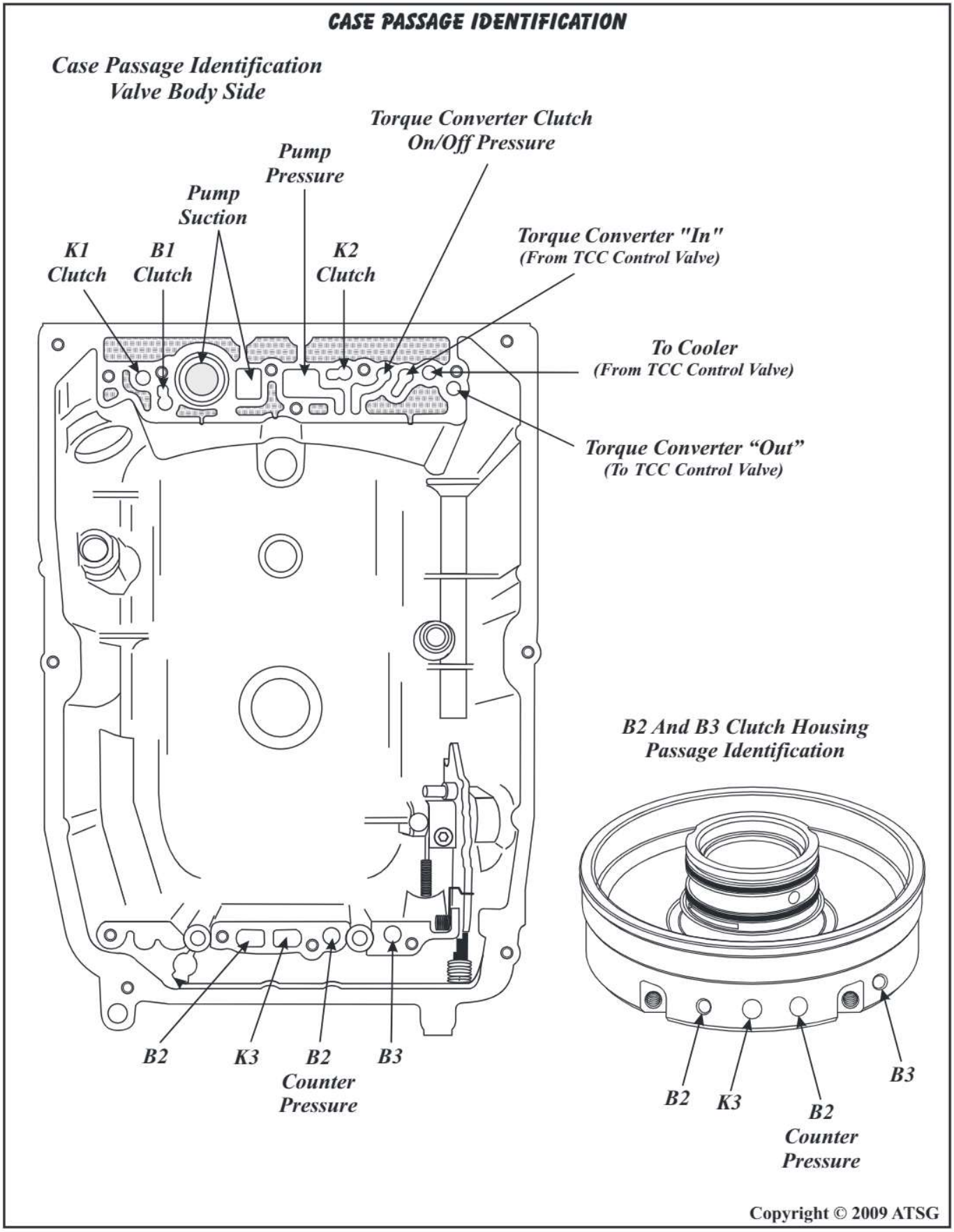

Copyright © 2009 ATSG

Figure 36

CASE PASSAGE IDENTIFICATION

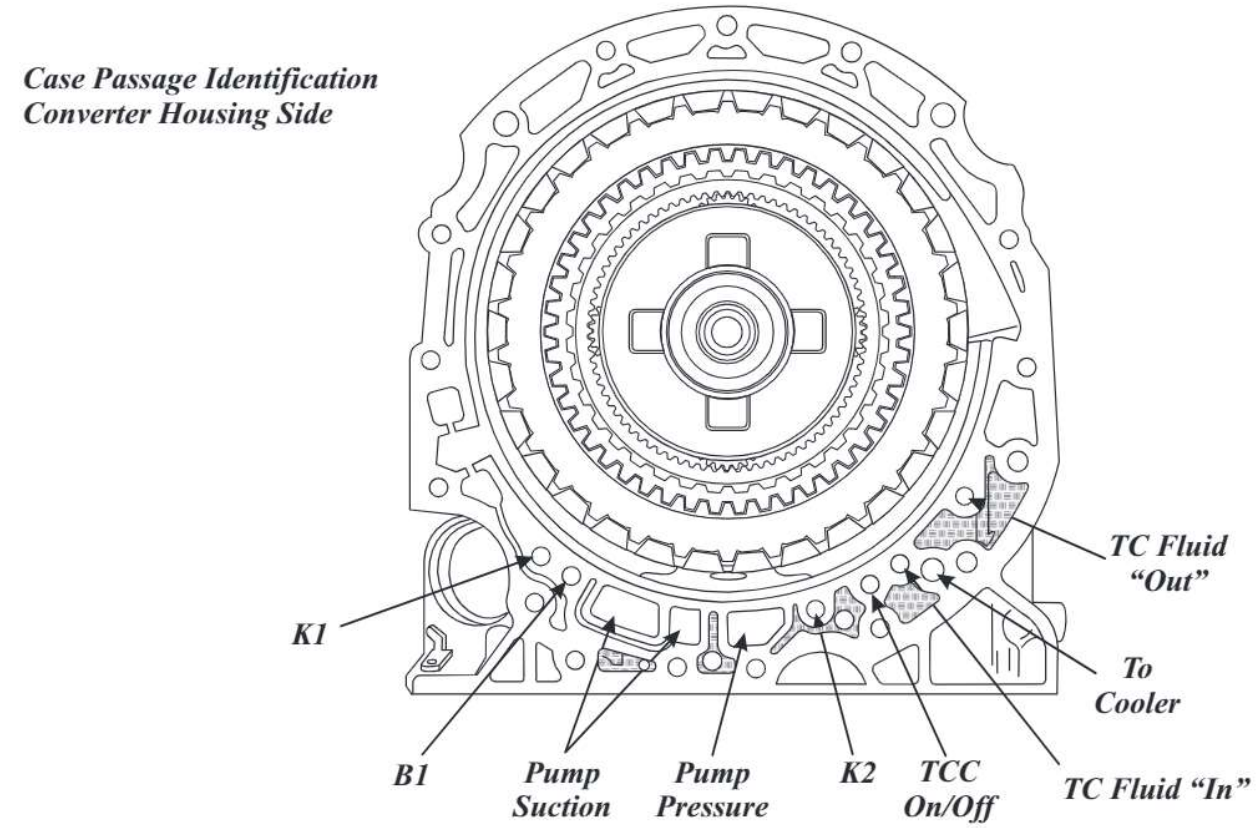

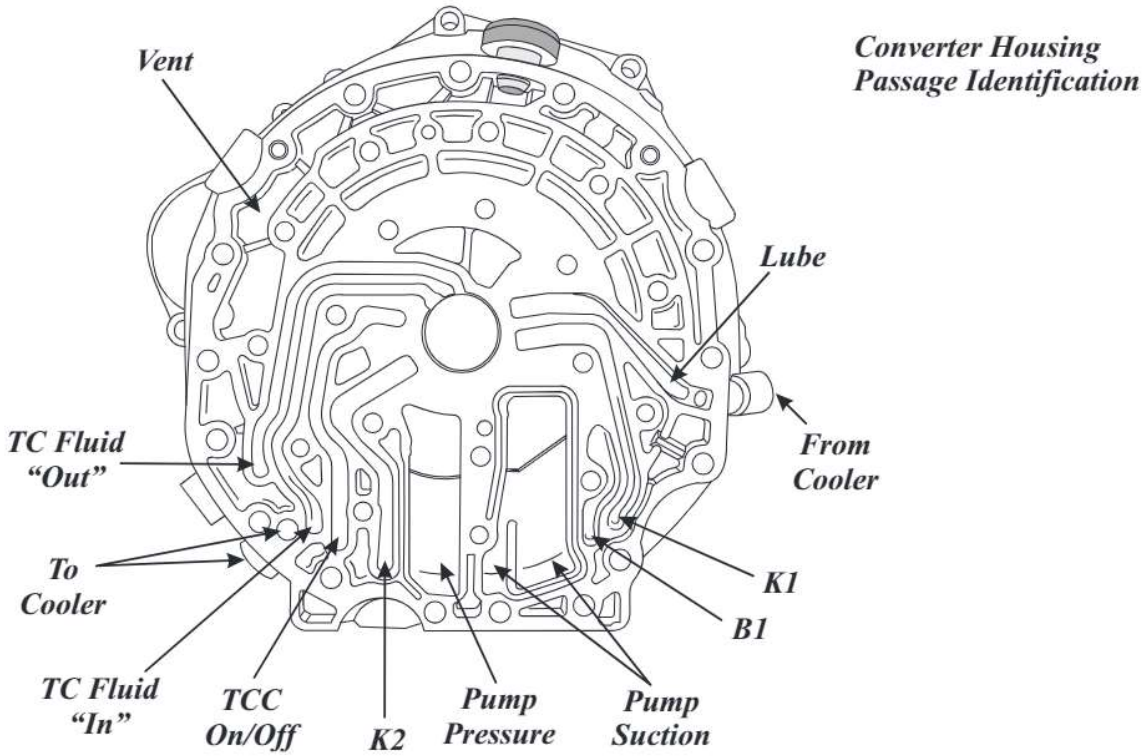

Copyright © 2009 ATSG

Figure 37

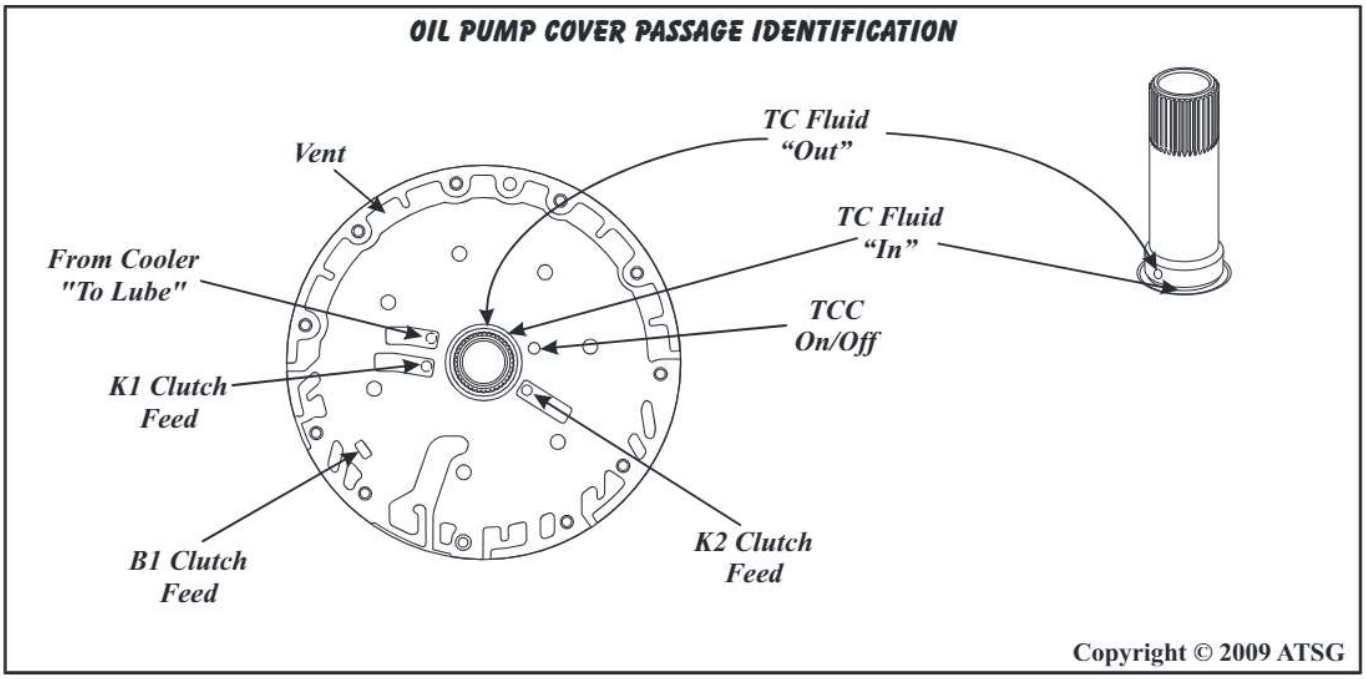

Figure 38

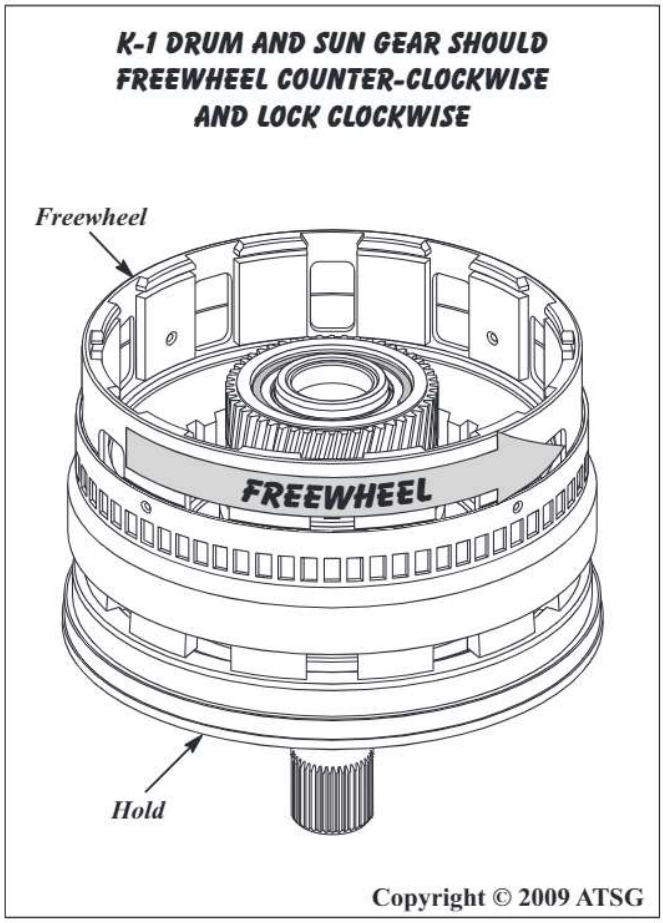

Figure 39

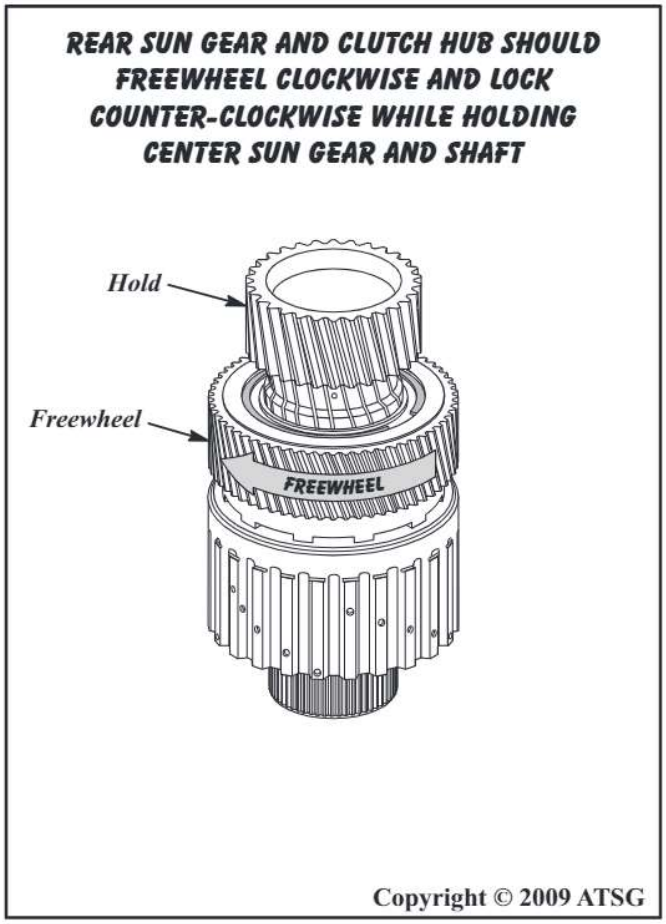

Figure 40

SAFETY PRECAUTIONS

Service information provided in this manual by ATSG is intended for use by professional, qualified technicians. Attempting repairs or service without the appropriate training, tools and equipment could cause injury to you or others.

The service procedures we recommend and describe in this manual are effective methods of performing service and repair on this unit. Some of the procedures require the use of special tools that are designed for specific purposes.

This manual contains CAUTIONS that you must observe carefully in order to reduce the risk of injury to yourself or others. This manual also contains NOTES that must be carefully followed in order to avoid improper service that may damage the vehicle, tools and/or equipment.

TRANSMISSION DISASSEMBLY

1. The complete transmission should be steam cleaned on the outside, to remove any dirt or grease, before disassembly begins.
2. The standard GM 350 holding fixture works just fine on the 722.6 transmission, as shown in Figure 41, which will give you the benefit of rotating the transmission easily.
3. Remove the torque converter from transmission and set aside to drain.
   Caution: Use care when removing the torque converter, to avoid personal injury and/or damage to converter, as it is heavy.
4. Install the holding fixture shown in Figure 41, install the unit in bench fixture and rotate the transmission so bell is facing up.

Continued on Page 40

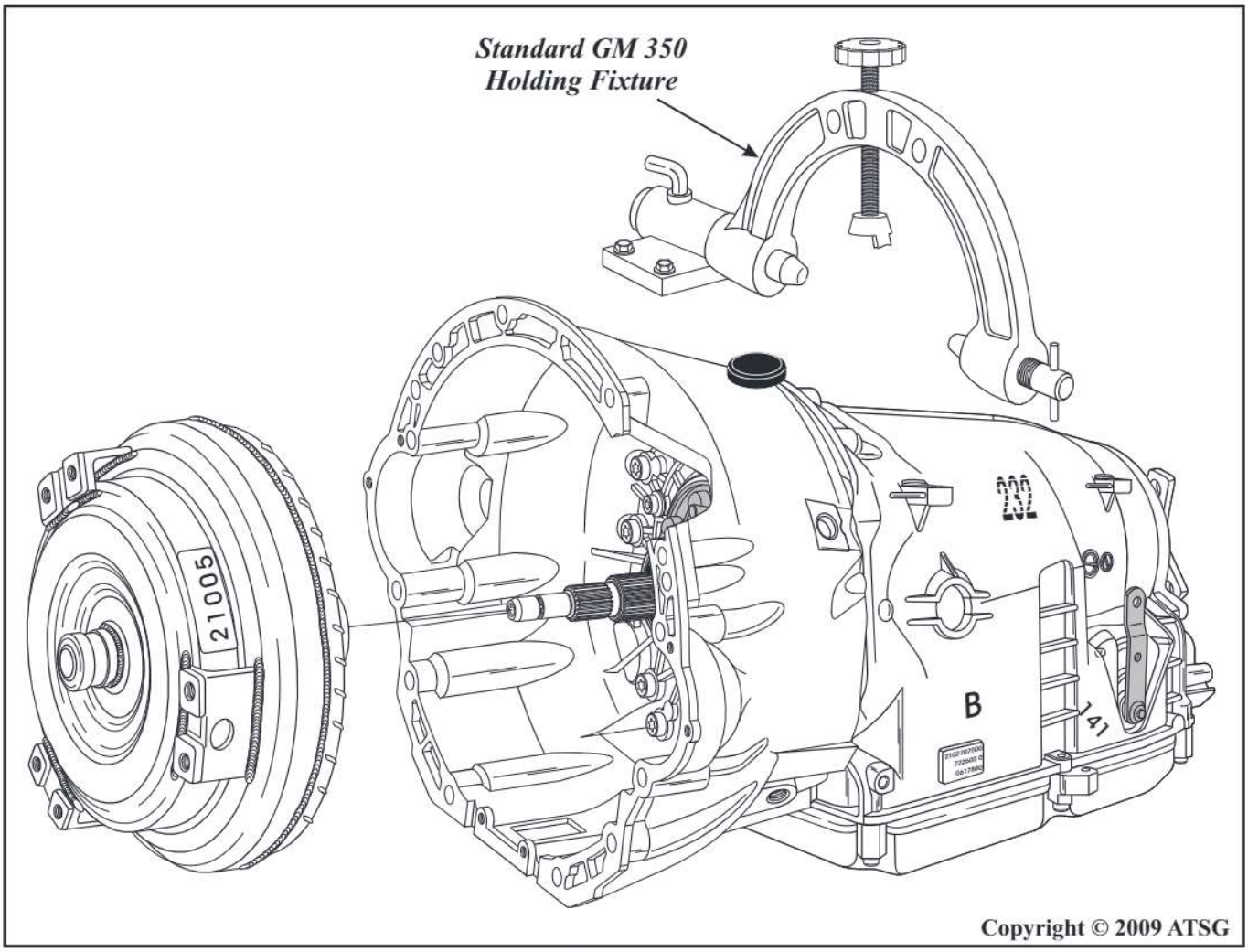

Copyright © 2009 ATSG

Figure 41

TRANSMISSION DISASSEMBLY (CONT'D)

5. Install dial indicator on transmission, as shown in Figure 42, with the plunger against flat spot on the input shaft.
6. Zero dial indicator and move the input shaft in and out to measure end-play.
7. Record measurement for assembly reference. End-play should be 0.3-0.5mm (.012"-.020").
8. Rotate transmission so that output shaft yoke is facing up, as shown in Figure 43.
   Caution: Drain pan may be required under transmission to catch fluid.
9. Place the transmission in the Park position to prepare for removal of the output shaft nut.
10. Remove the output shaft drive yoke retaining nut, using a 30 mm, 12 point socket, as shown in Figure 43.
11. Remove the output shaft drive yoke, as shown in Figure 43.
12. Remove and discard the transmission rear seal, as shown in Figure 43.
13. Remove the transmission output shaft washer, as shown in Figure 43.
    Note: Tag the washer, or tie-wrap it to the yoke since it is very similar to the geartrain end-play shim and they "must not" be interchanged.

Continued on Page 41

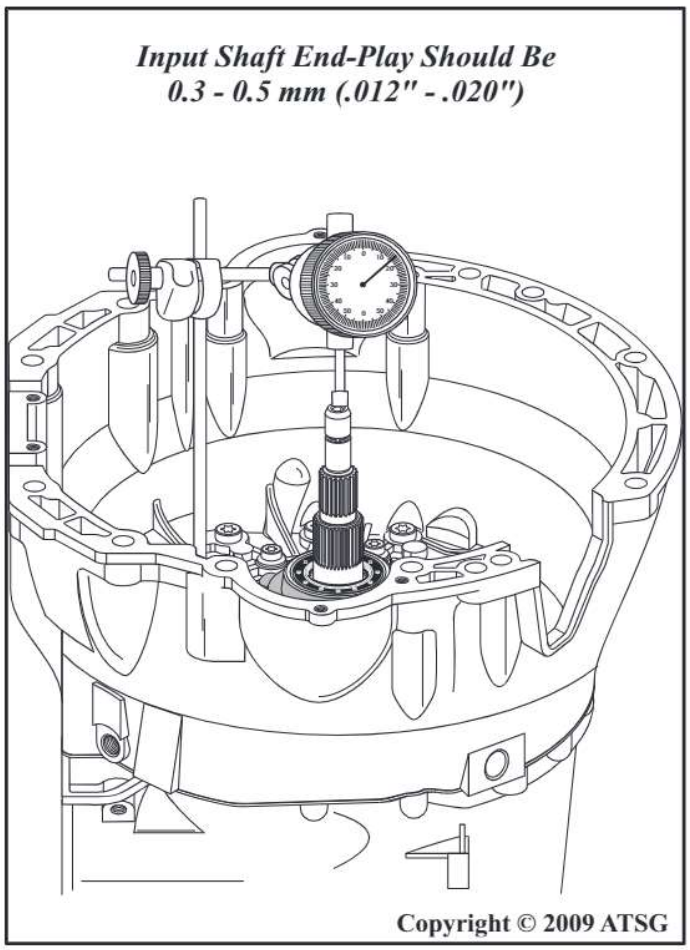

Figure 42

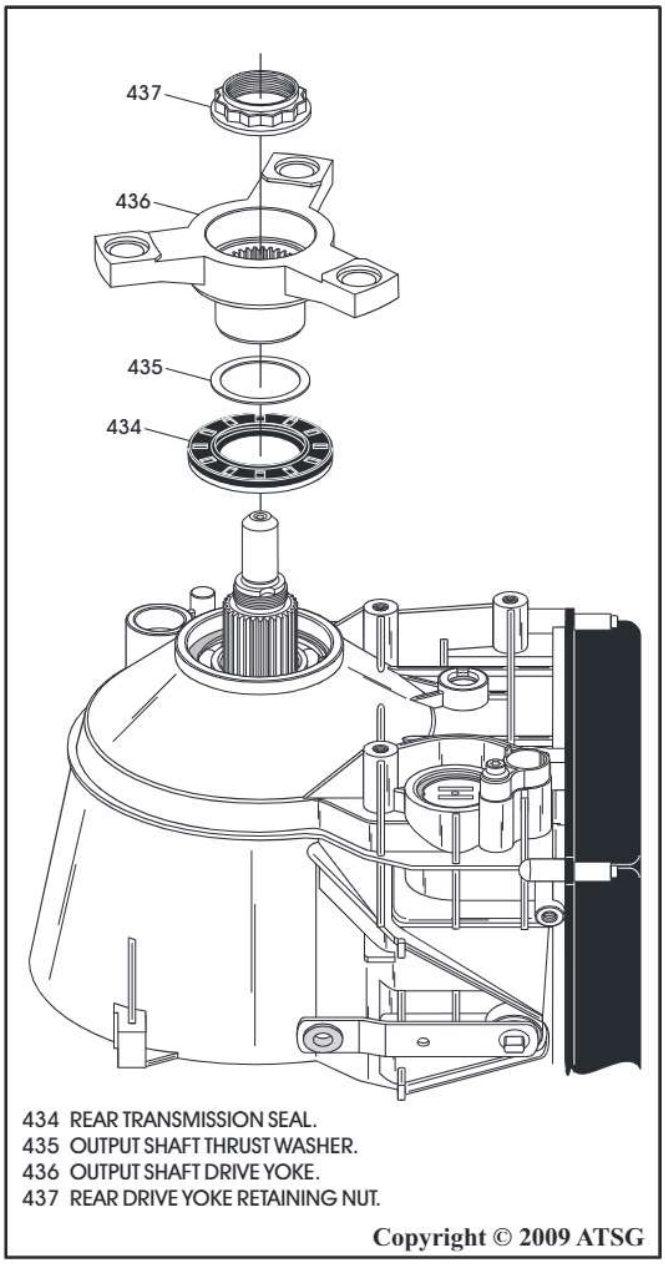

Figure 43

TRANSMISSION DISASSEMBLY (CONT'D)

14. Remove the 2 converter housing to case bolts on the rear of case by converter housing, using a 40 Torx bit, as shown in Figure 44.
15. Rotate transmission so that the bottom pan is facing up as shown in Figure 45.
16. Remove the six oil pan bolts and the spacers, as shown in Figure 45.
17. Remove the oil pan, remove and discard oil pan rubber gasket, as shown in Figure 45.

Continued on Page 42

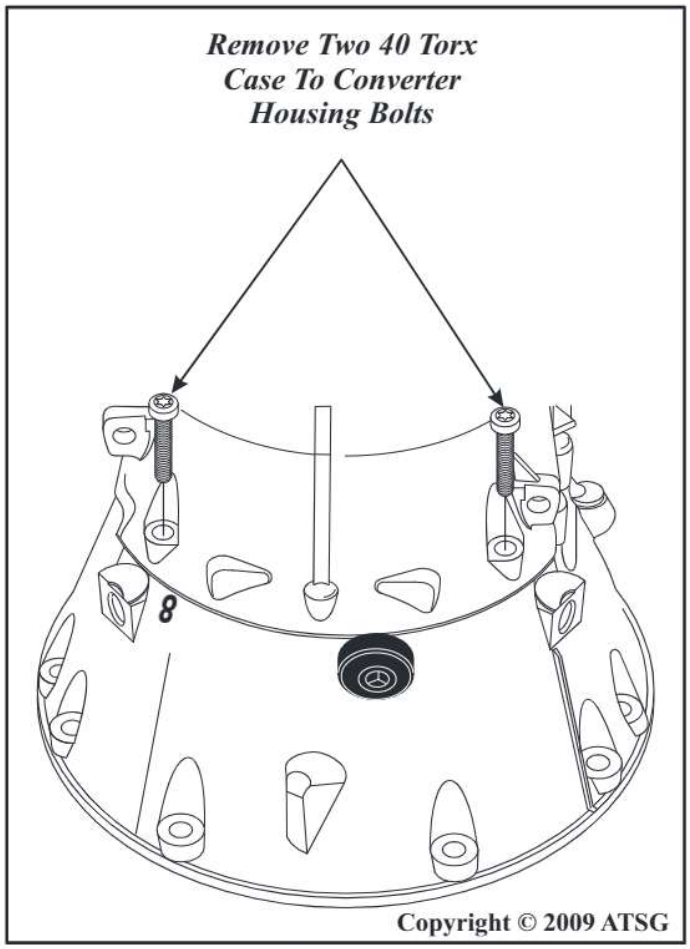

Figure 44

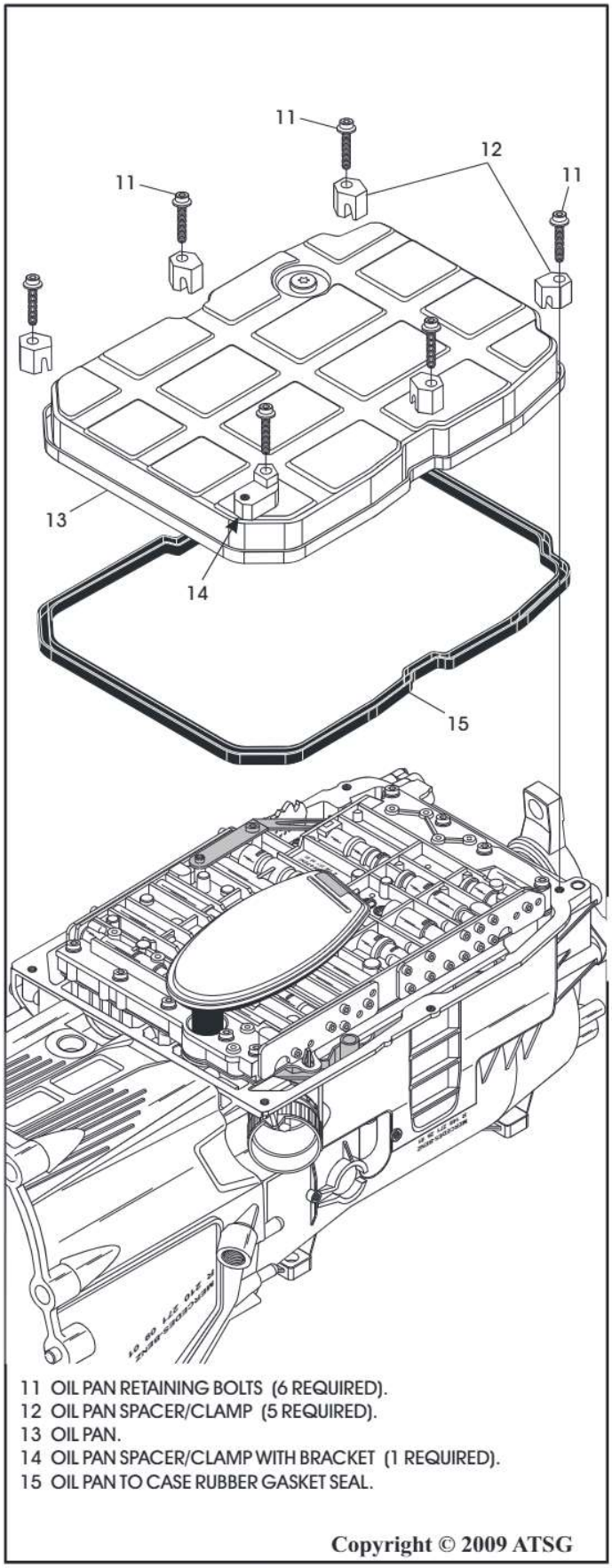

Figure 45

TRANSMISSION DISASSEMBLY (CONT'D)

18. Remove the oil filter by pulling straight up, as shown in Figure 46 and discard filter and the "O" ring seal.
19. Remove the case to electrical conductor plate sealing sleeve, as shown in Figure 47.
    Note: You must remove the "captured" brass bolt in the center of the sleeve, as shown in Figure 47, using a 7 mm socket (9/32" socket will work as well).
20. Remove and discard both the large and small "O" ring seals (See Figure 47).
21. Remove the ten valve body retaining bolts, as shown in Figure 47, using a 30 torx bit.
22. Remove the complete valve body assembly, as shown in Figure 47, by lifting straight up.
23. Set the complete valve body assembly aside for the component rebuild section.

Continued on Page 43

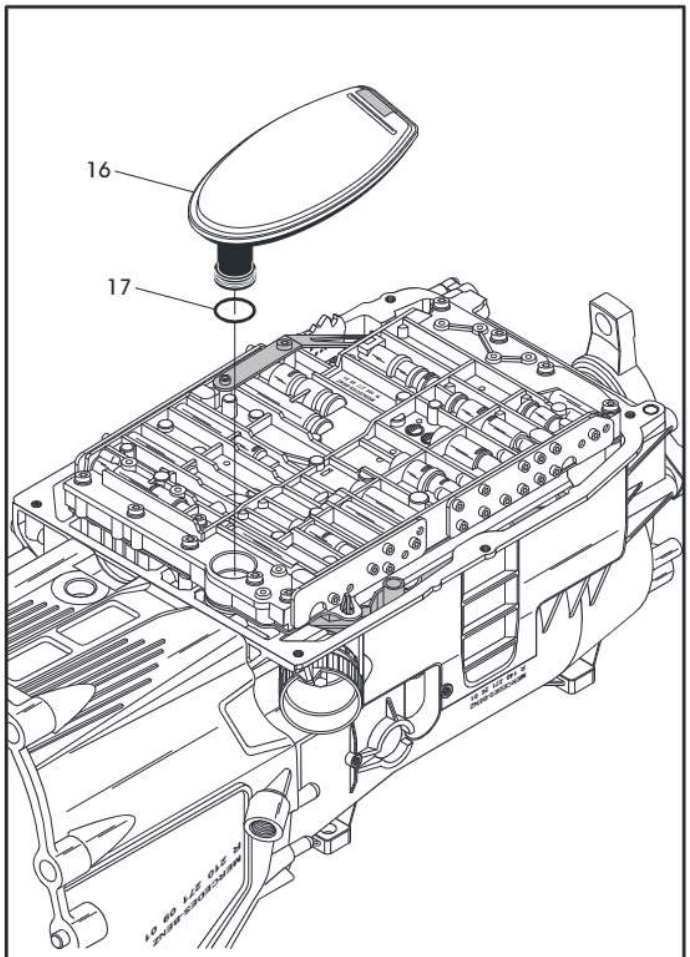

16 OIL FILTER ASSEMBLY.
17 OIL FILTER NECK "O" RING SEAL.

Copyright © 2009 ATSG

Figure 46

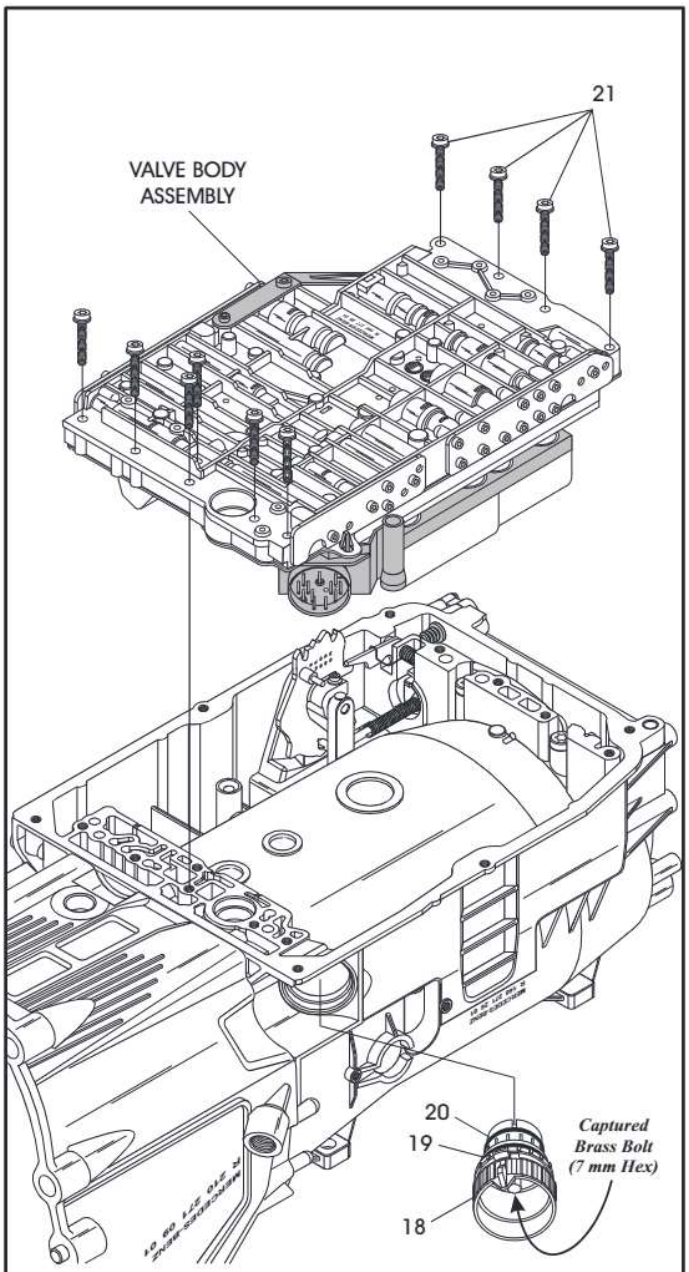

18 CASE TO ELECTRICAL CONDUCTOR PLATE SEALING SLEEVE.
19 CASE SLEEVE LARGE "O" RING SEAL..
20 CASE SLEEVE SMALL "O" RING SEAL.
21 VALVE BODY RETAINING BOLTS (10 REQUIRED).

Copyright © 2009 ATSG

Figure 47

TRANSMISSION DISASSEMBLY (CONT'D)

24. Remove the two B-2 clutch housing retaining bolts, as shown in Figure 48, using 40 Torx bit.
25. Rotate transmission so that converter housing is facing up as shown in Figure50.
26. Remove the remaining 15 converter housing to case bolts from inside the converter housing, as shown in Figure 49 and 50, using 40 Torx bit. ***Note: Do not remove the circle of 30 Torx bolts shown in Figure 49. This is easier done in component rebuild.***
27. Remove converter housing, oil pump and B-1 clutch as an assembly, as shown in Figure 50.
28. Set converter housing, oil pump and B-1 clutch assembly aside for component rebuild.

Continued on Page 44

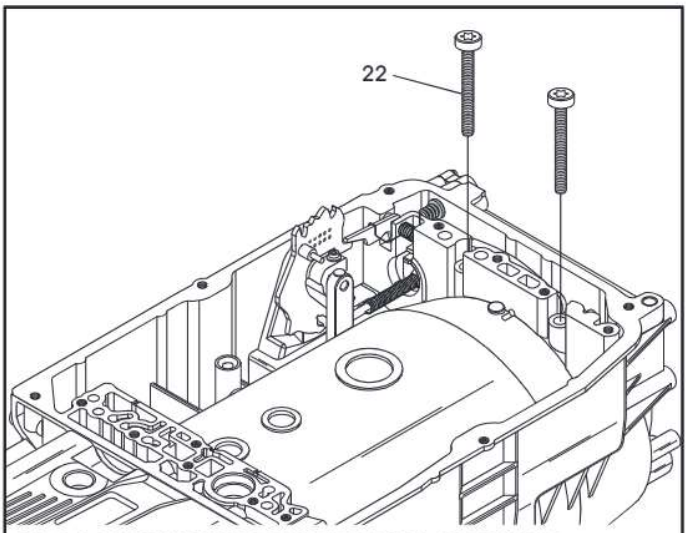

22 B-2 CLUTCH HOUSING RETAINING BOLTS (2 REQUIRED).

Copyright © 2009 ATSG

Figure 48

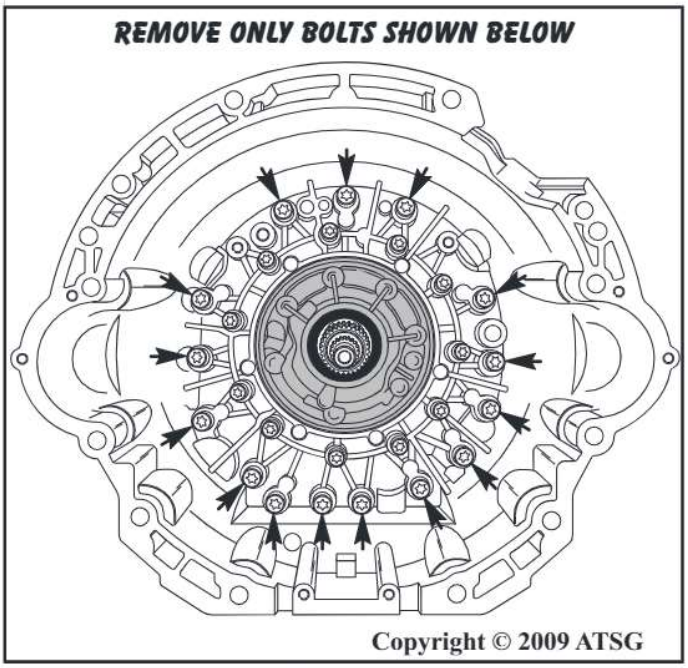

Copyright © 2009 ATSG

Figure 49

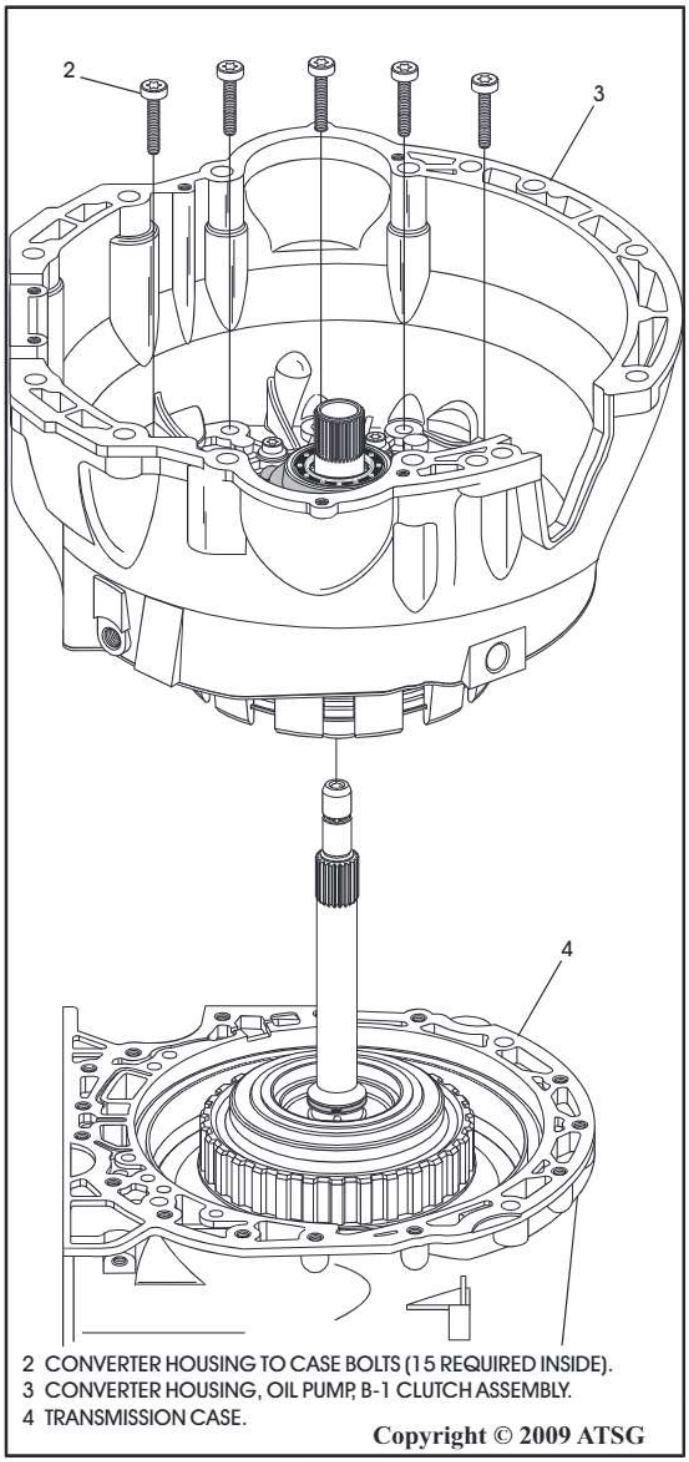

2 CONVERTER HOUSING TO CASE BOLTS (15 REQUIRED INSIDE).
3 CONVERTER HOUSING, OIL PUMP, B-1 CLUTCH ASSEMBLY.
4 TRANSMISSION CASE.

Copyright © 2009 ATSG

Figure 50

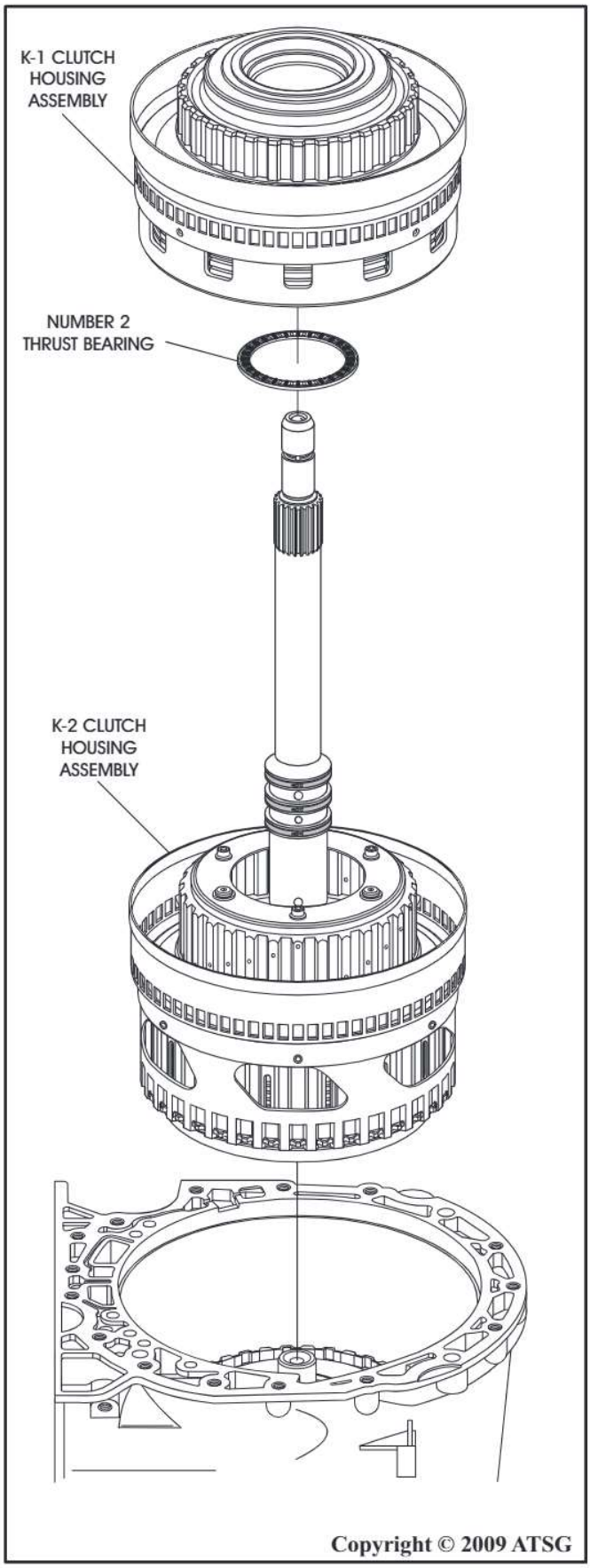

Figure 51

TRANSMISSION DISASSEMBLY (CONT'D)

29. Remove the K-1 and K-2 clutch housings from the case, as shown in Figure 51, and set both aside for component rebuild.
    Note: These can be removed as an assembly and seperated after removal. Remove the number 2 thrust bearing.
30. Remove the complete gear train assembly from the case, as shown in Figure 52, and set aside for component rebuild.
    Note: Number 4 thrust bearing race may be stuck to K-2 clutch housing.

Continued on Page 45

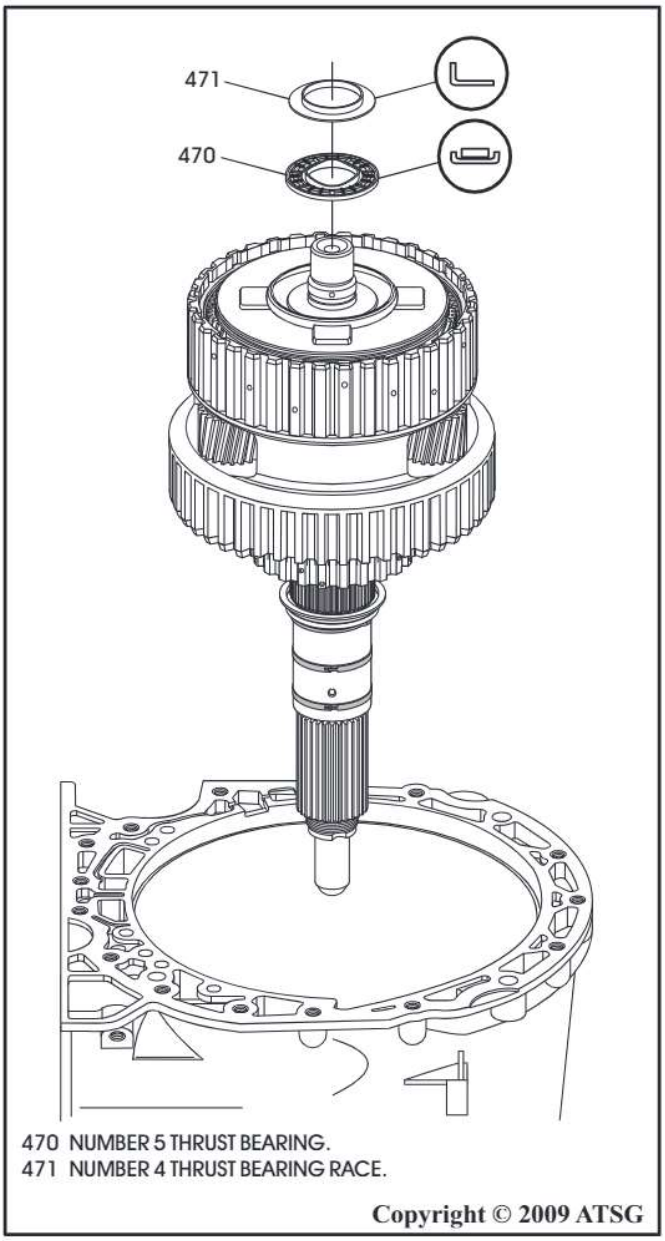

Figure 52

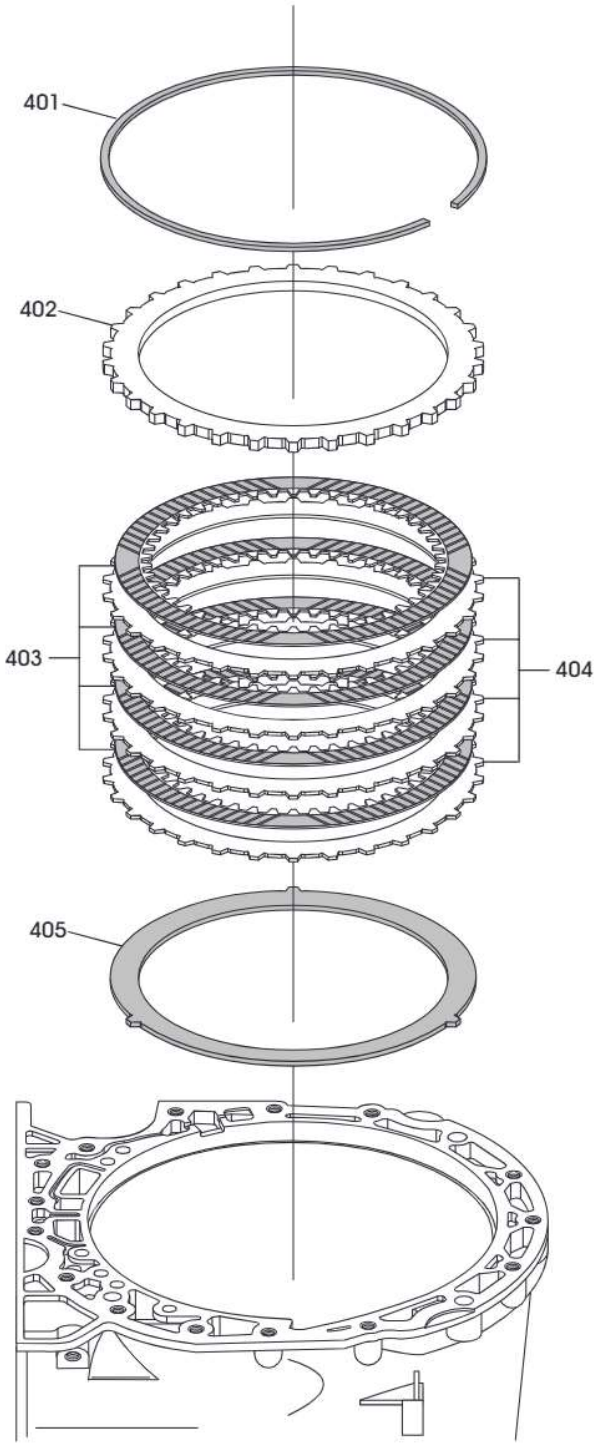

401 B-3 CLUTCH "*SELECTIVE*" SNAP RING.
402 B-3 CLUTCH BACKING PLATE.
403 B-3 CLUTCH FRICTION PLATES (QTY VARIES, SEE CHART).
404 B-3 CLUTCH STEEL PLATES (QTY VARIES, SEE CHART).
405 B-3 CLUTCH CUSHION PLATE.

Figure 53

TRANSMISSION DISASSEMBLY (CONT'D)

31. Remove the B-3 *selective* snap ring, as shown in Figure 53.
    Note: It is recommended that all snap rings be tagged for identification as many are very similar, but will not interchange.
32. Remove complete B-3 clutch pack, as shown in Figure 53.
33. Remove the B-2 clutch housing assembly, as shown in Figure 54, and set aside for the component rebuild section.

Continued on Page 46

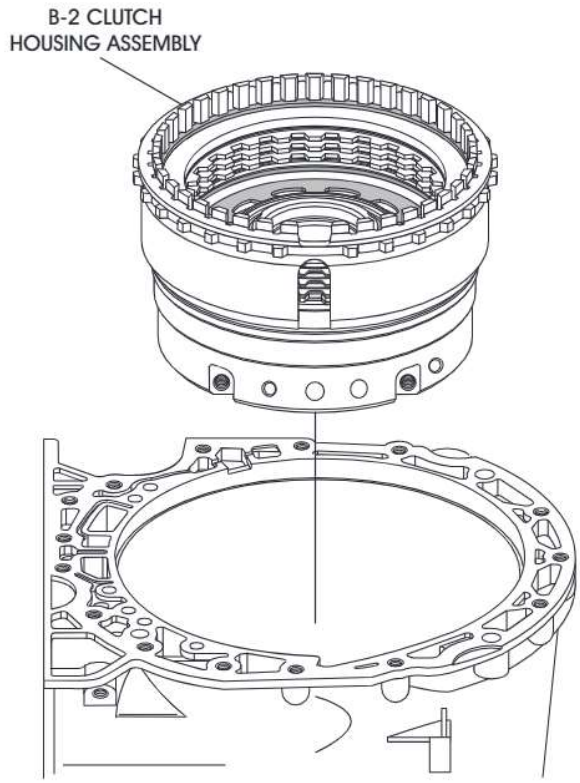

Copyright © 2009 ATSG

Figure 54

TRANSMISSION DISASSEMBLY (CONT'D)

34. Remove the parking gear and transmission end play shim, as shown in Figure 55.
    Note: Tag the end-play shim, or tie-wrap it to the parking gear since it is very similar to the output shaft washer and they "must not" be interchanged.
35. Rotate transmission case so that rear is facing up, as shown in Figure 56.
36. Remove the ball bearing retaining snap ring, as shown in Figure 56.
37. Remove the ball bearing from the case, as shown in Figure 56.
38. Remove the parking rod guide sleeve retaining snap ring (52), in preparation for removing the internal linkage (See Figure 56).
39. Remove the parking pawl pivot pin retaining circlip (56), in preparation for removing the internal linkage (See Figure 56).
40. Rotate the transmission case so that pan rail is facing up, as shown in Figure 57, and remove linkage bolt using 30 Torx bit.
41. Remove outside shift lever and manual shaft from case, as shown in Figure 58.

Continued on Page 48

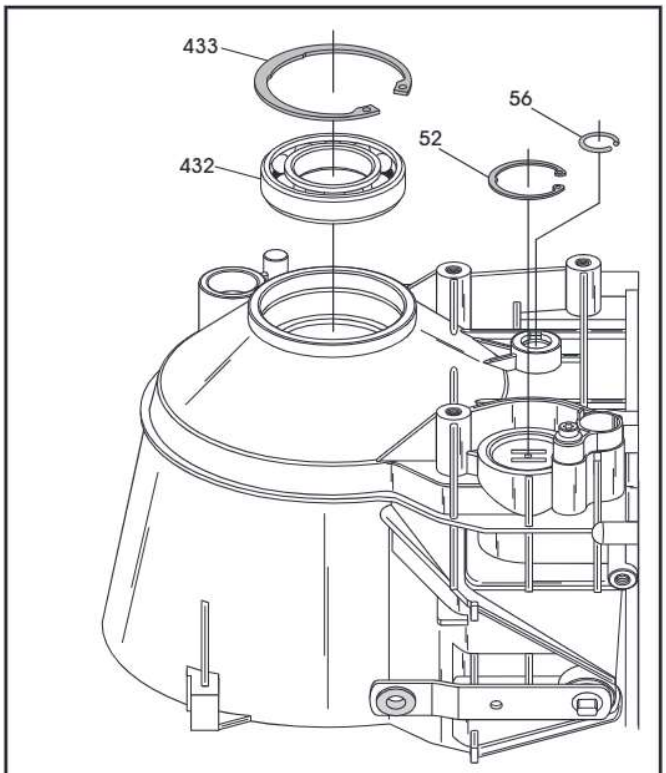

52 PARKING ROD GUIDE SLEEVE RETAINING SNAP RING.
56 PARKING PAWL PIVOT PIN RETAINING CIRCLIP
432 REAR TRANSMISSION BALL BEARING.
433 REAR BALL BEARING RETAINING SNAP RING.

Copyright © 2009 ATSG

Figure 56

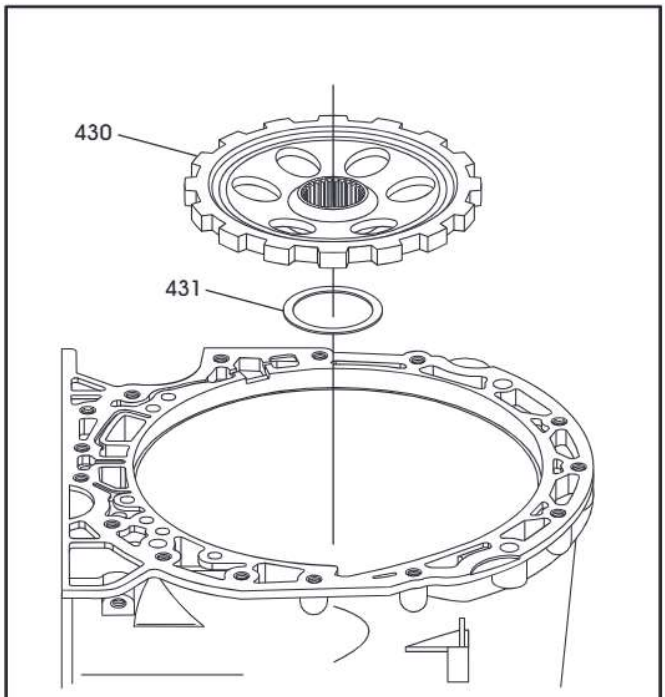

430 PARKING GEAR.
431 PARKING GEAR TO REAR BEARING SHIM (END-PLAY).

Copyright © 2009 ATSG

Figure 55

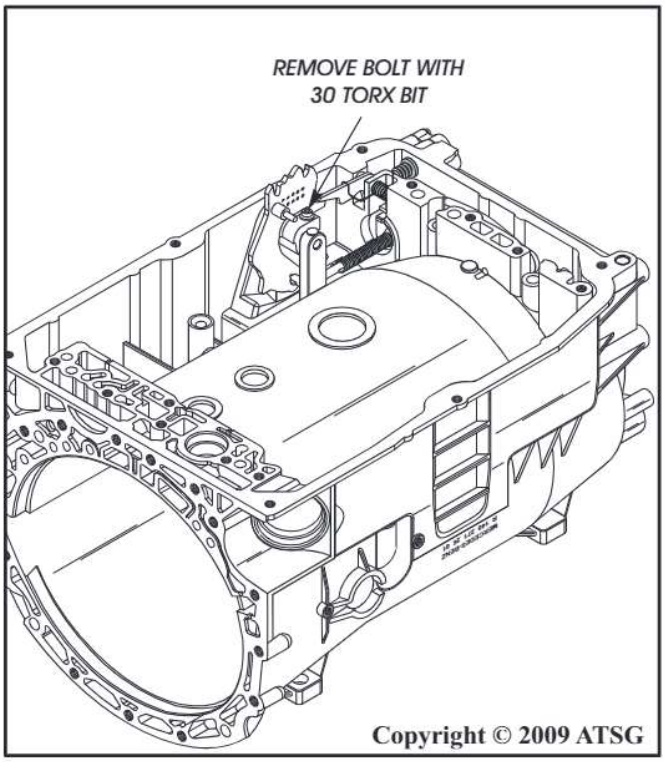

Copyright © 2009 ATSG

Figure 57

TRANSMISSION DISASSEMBLY (CONT'D)

42. Remove inside detent lever and parking rod as an assembly from case (See Figure 58).
43. Push the parking pawl down against the spring pressure and remove the parking rod guide sleeve (See Figure 58).
44. Use a pick through the hole in case, as shown in Figure 58, to push the parking pawl pivot pin out of case.

Continued on Page 48

PARKING LINKAGE EXPLODED VIEW

40 OUTSIDE SHIFT LEVER AND MANUAL SHAFT ASSEMBLY.
41 MANUAL SHAFT SEAL.
42 INSIDE DETENT LEVER.
43 PARKING PAWL ACTUATOR ROD.
44 INSIDE DETENT LEVER RETAINING BOLT.
45 LOCK PAWL PIVOT PIN (ELIMINATED 1999).
46 LOCK PAWL (ELIMINATED 1999).
47 LOCK PAWL RETURN SPRING (ELIMINATED 1999.
48 PARKING PAWL RETURN SPRING.
49 PARKING PAWL.
50 PARK LOCK INTERLOCK LINKAGE (ELIMINATED 1999).
51 PARK LOCK INTERLOCK LINKAGE RETAINING BOLT.
52 PARKING ROD GUIDE SLEEVE RETAINING SNAP RING.
53 PARKING ROD GUIDE SLEEVE "O" RING SEAL.
54 PARKING ROD SLEEVE.
55 PARKING ROD SLEEVE TENSION SPRING.
56 PARKING PAWL PIVOT PIN RETAINING CIRCLIP.
57 PARKING PAWL PIVOT PIN "O" RING SEAL.
58 PARKING PAWL PIVOT PIN.

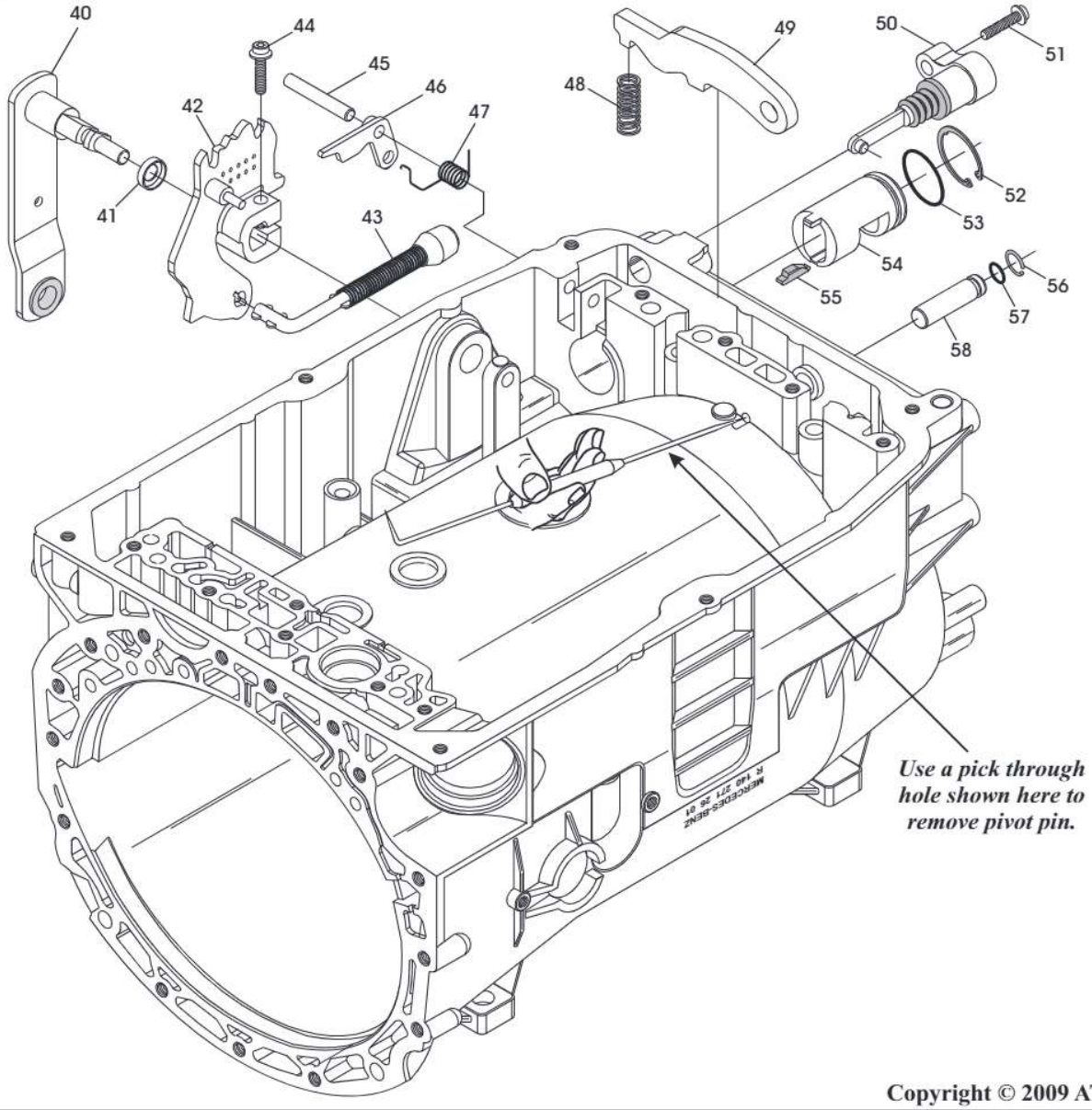

Copyright © 2009 ATSG

Figure 58

TRANSMISSION DISASSEMBLY (CONT'D)

45. The Parking Lock Interlock Linkage (PLIL), as shown in Figure 58, cannot be removed unless you first remove the lock pawl pivot pin (45), lock pawl (46), and lock pawl spring (47). ***Note: The pivot pin is very difficult to remove as it goes into a blind hole and "staked".***
46. If the PLIL is not broken and not leaking, our suggestion is, leave it alone.
47. If it does need replacement, you must figure a way to remove the pivot pin.
48. When going back in, the pin also needs some type of sealer in the case end.

COMPONENT REBUILD

Transmission Case Assembly

1. Clean all transmission case parts thoroughly and dry with compressed air.
2. Inspect all transmission case parts thoroughly for any wear and/or damage.
3. Install parking pawl and return spring into the case, as shown in Figure 58.
4. Install new "O" ring seal on the parking pawl pivot pin, as shown in Figure 58, and lube with s small amount of Trans-Jel®.
5. Install parking pawl pivot pin into case bore and through parking pawl (See Figure 58).
6. Install new "O" ring seal on the parking rod guide sleeve, as shown in Figure 58, and lube with a small amount of Trans-Jel®.
7. Push down on the parking pawl against spring pressure and install parking rod guide sleeve into the case bore, with the tension spring on the guide sleeve facing away from pan rail, as shown in Figure 58.
8. Install new manual shaft seal into case bore using the proper driver (See Figure 59).
9. Install the parking rod into the inside detent lever, as shown in Figure 58.
10. Install the assembly into the case with the park rod going into the sleeve, install the outside shift lever and manual shaft through the case and into the inside detent lever, as shown in Figure 58.
11. Install the retaining bolt and torque the bolt to 8 N·m (71 in.lb.).
12. Rotate transmission case so that rear is facing up, as shown in Figure 60.
13. Install the circlip and the snap ring, as shown in Figure 60, and ensure fully seated.
14. Transmission case is now ready for the final assembly process.

Component Rebuild
Continued on Page 49

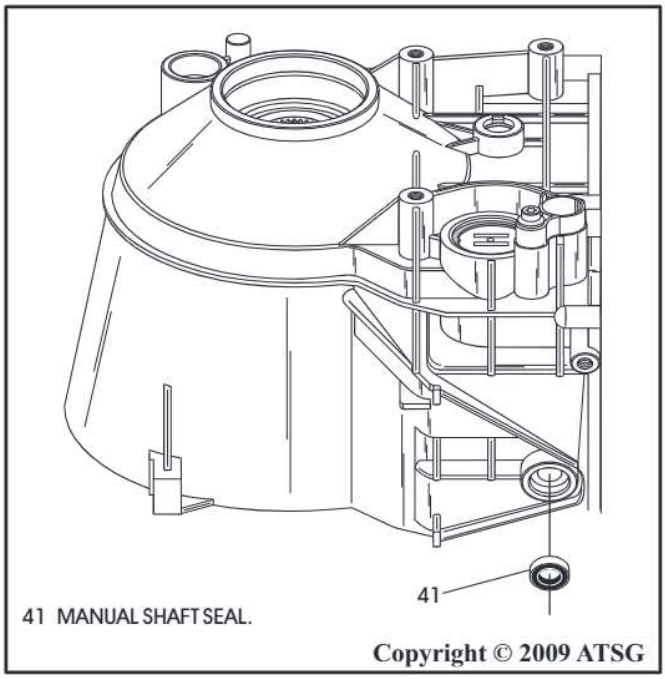

Figure 59

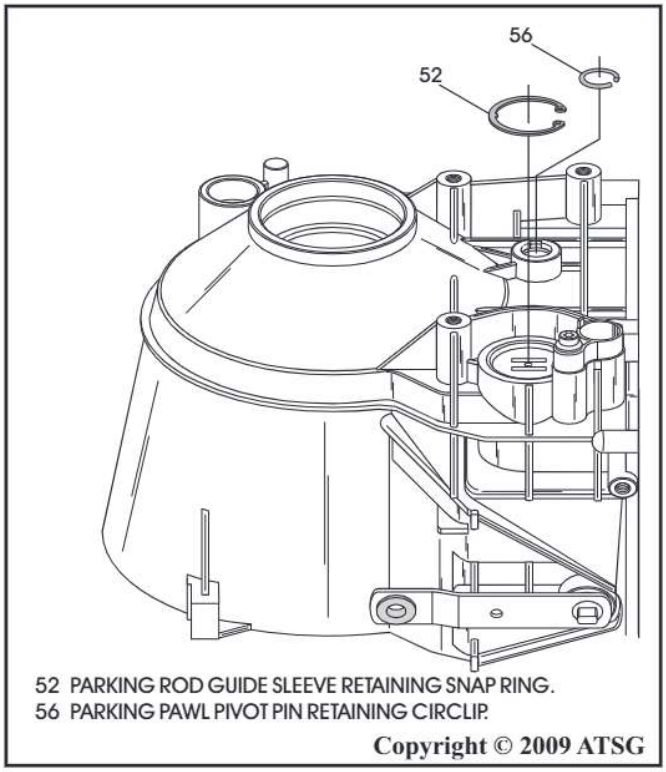

Figure 60

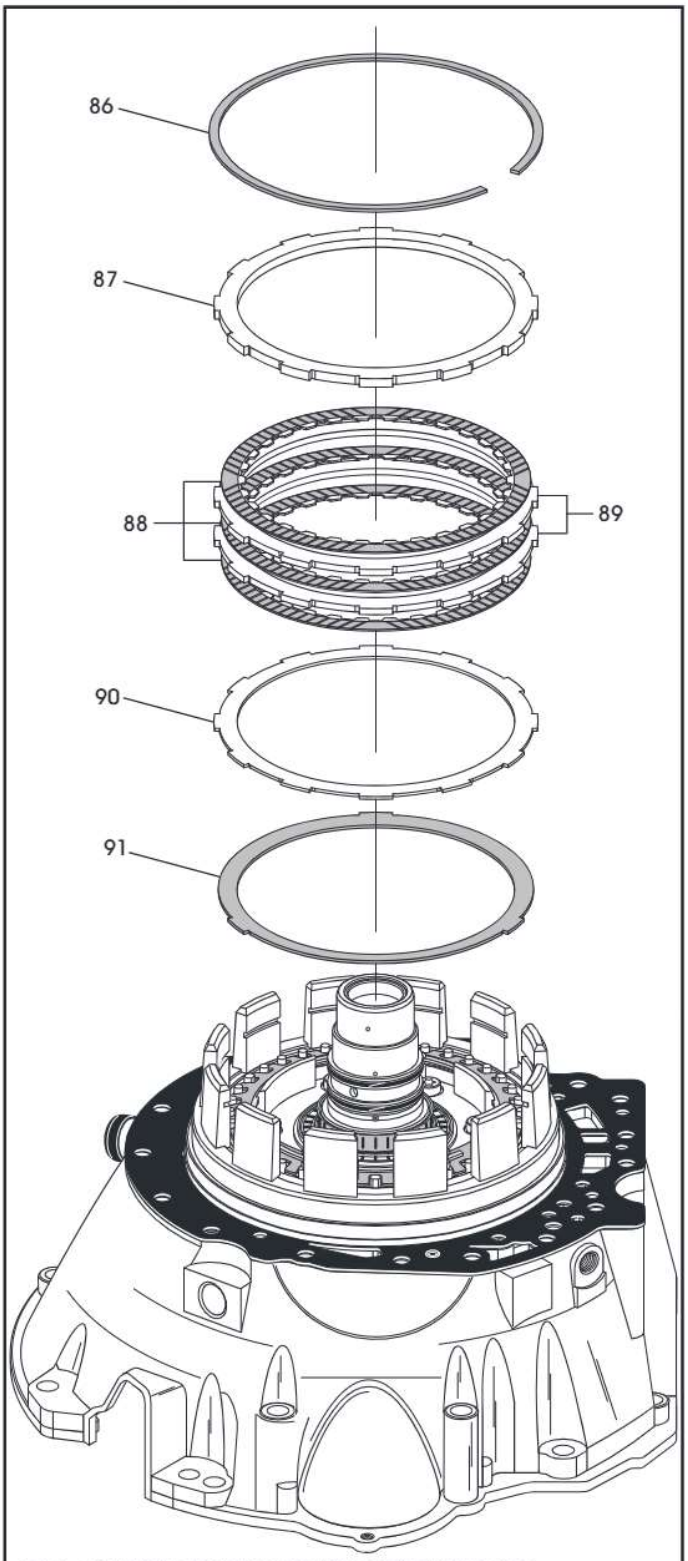

86 B-1 CLUTCH BACKING PLATE "*SELECTIVE*" SNAP RING.
87 B-1 CLUTCH BACKING PLATE.
88 B-1 CLUTCH FRICTION PLATES (QTY. VARIES, SEE CHART).
89 B-1 CLUTCH STEEL PLATES (QTY. VARIES, SEE CHART).
90 B-1 CLUTCH APPLY PLATE (.071").
91 B-1 CLUTCH CUSHION PLATE.

Copyright © 2009 ATSG

Figure 61

COMPONENT REBUILD (CONT'D)

Oil Pump And B-1 Clutch Assembly

1. Place converter housing, oil pump, B-1 clutch assembly face down on a flat work surface, as shown in Figure 61.
2. Remove the B-1 clutch *selective* snap ring, as shown in Figure 61.
   Note: It is recommended that all snap rings be tagged for identification as many are very similar, but will not interchange.
3. Remove the complete B-1 clutch, as shown in Figure 61.
4. Turn the converter housing over and remove the 11 retaining bolts, as shown in Figure 62, using a 30 Torx bit.

Continued on Page 50

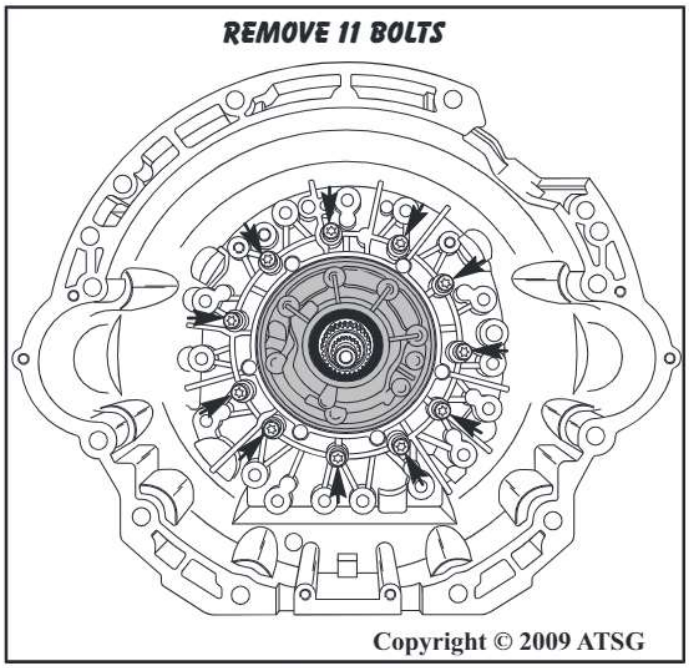

Copyright © 2009 ATSG

Figure 62

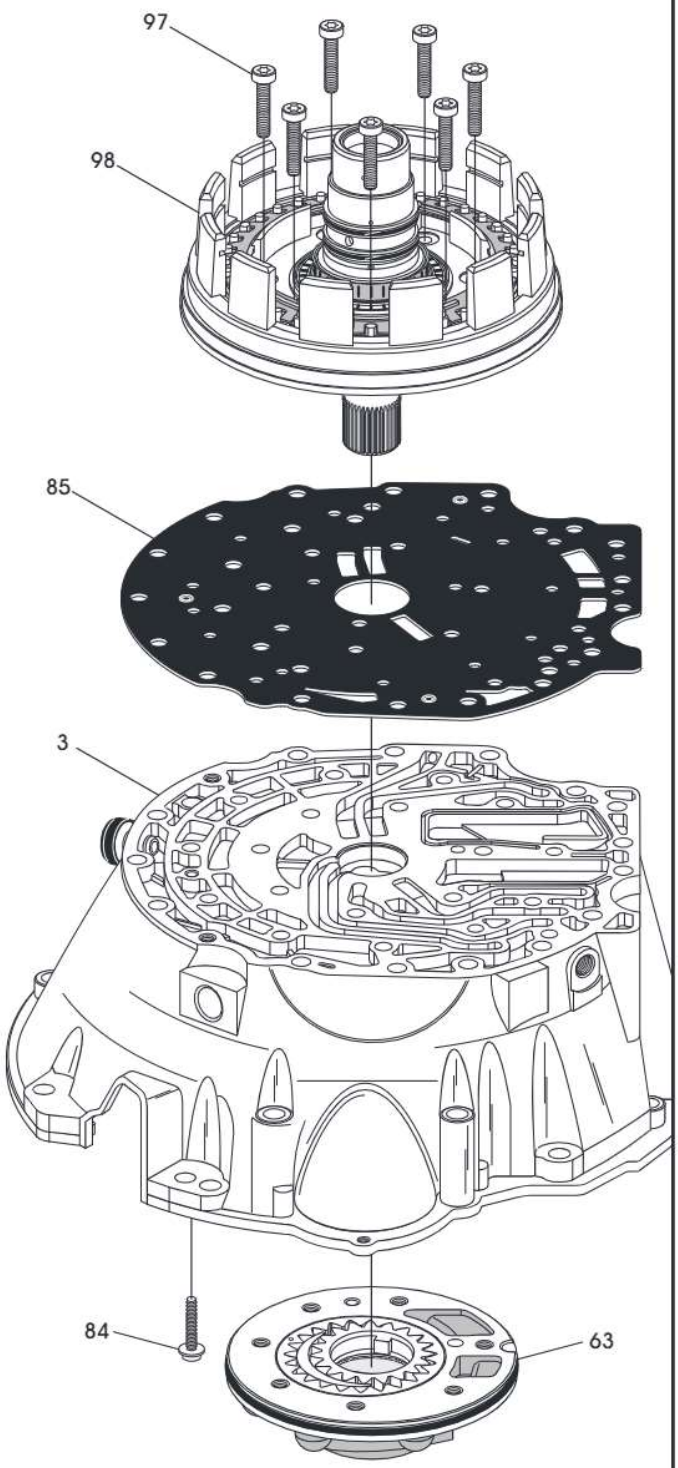

3 TORQUE CONVERTER HOUSING.
63 OIL PUMP ASSEMBLY
84 B-1 CLUTCH HOUSING RETAINING BOLTS (11 REQUIRED).
85 CONVERTER HOUSING TO CASE SPACER PLATE.
97 B-1 CLUTCH HOUSING TO OIL PUMP BOLTS (7 REQUIRED).
98 B-1 CLUTCH HOUSING AND OIL PUMP COVER ASSEMBLY.

Copyright © 2009 ATSG

Figure 63

Oil Pump And B-1 Clutch Assembly (Cont'd)

5. Remove seven B-1 clutch housing to oil pump retaining bolts, as shown in Figure 63.
6. Seperate converter housing, oil pump, B-1 clutch housing, as shown in Figure 63.
7. Compress B-1 clutch return spring and remove the "L" shaped snap ring (See Figure 64).
8. Remove the B-1 clutch return spring and apply piston, as shown in Figure 64.
9. For the rebuild process we will begin with the oil pump on Page 51.

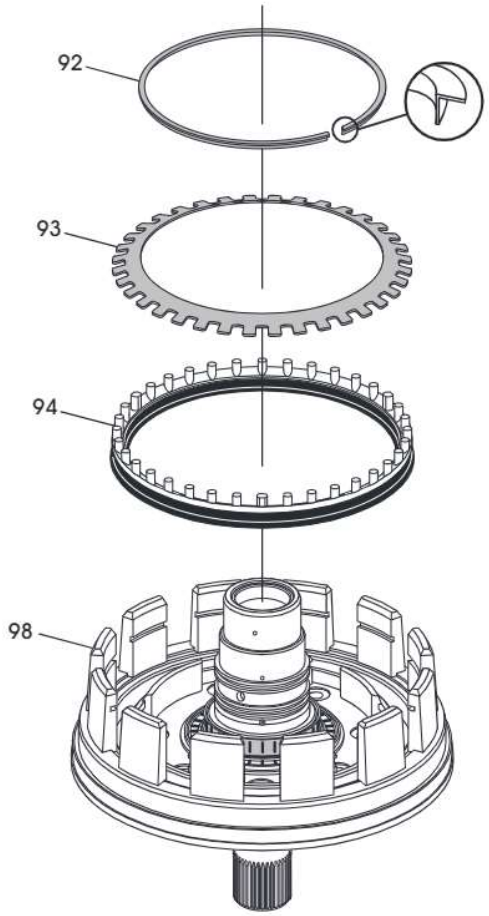

92 B-1 CLUTCH PISTON RETURN SPRING "L" SHAPED SNAP RING.
93 B-1 CLUTCH PISTON DIAPHRAGM RETURN SPRING.
94 B-1 CLUTCH MOLDED APPLY PISTON.
98 B-1 CLUTCH HOUSING AND OIL PUMP COVER ASSEMBLY.

Copyright © 2009 ATSG

Figure 64

Oil Pump And B-1 Clutch Assembly (Cont'd)

10. Clean all converter housing, oil pump and the B-1 clutch parts thoroughly and dry with compressed air.
11. Inspect all converter housing, oil pump and the B-1 clutch parts thoroughly for any wear and/or damage.

Continued on Page 52

OIL PUMP AND RELATED PARTS, EXPLODED VIEW

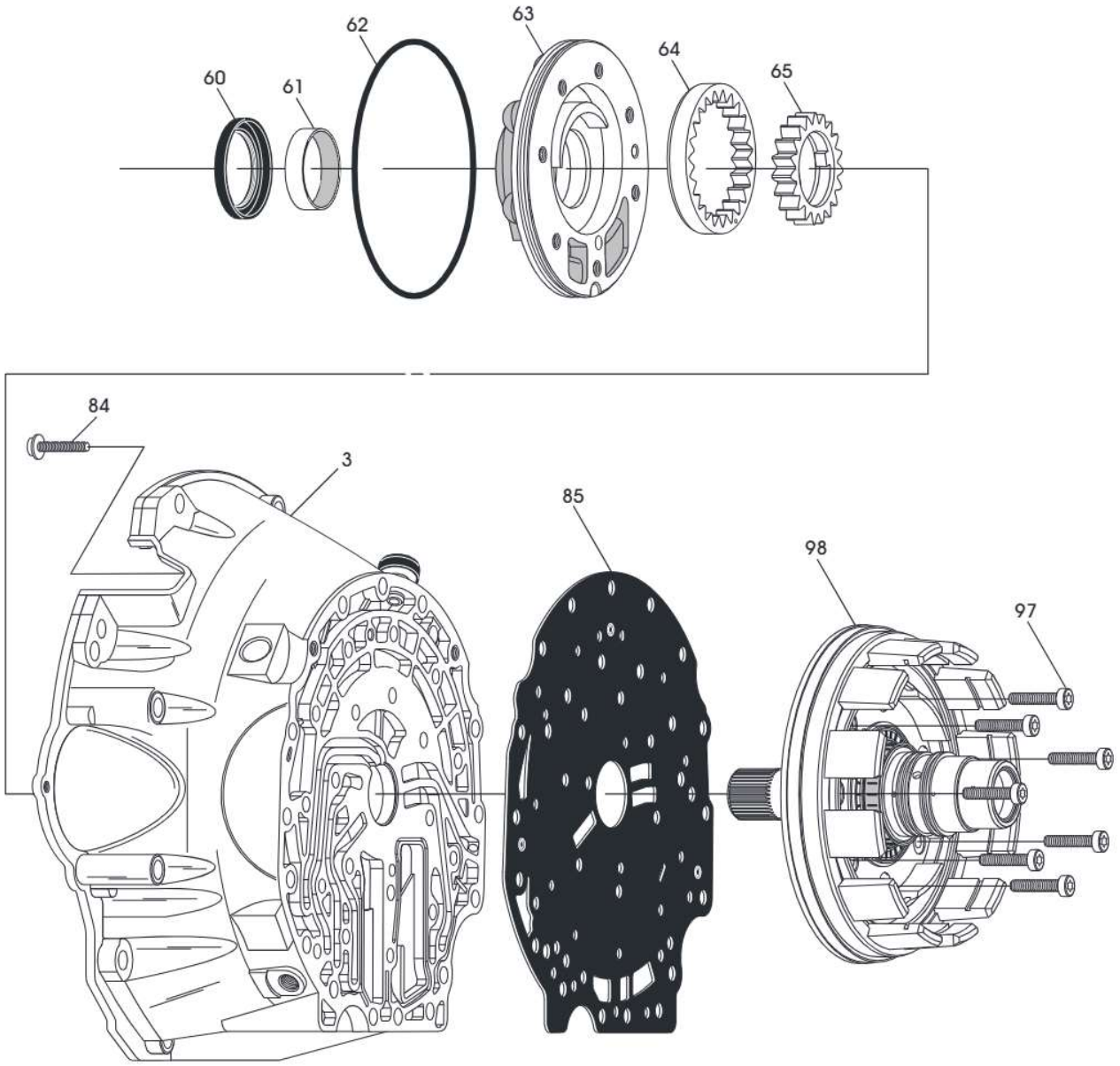

3 TORQUE CONVERTER HOUSING.
60 TORQUE CONVERTER SEAL.
61 TORQUE CONVERTER HUB BUSHING.
62 OIL PUMP BODY TO CONVERTER HOUSING "O" RING SEAL.
63 OIL PUMP BODY .
64 OIL PUMP OUTER GEAR.
65 OIL PUMP INNER GEAR.
84 CONVERTER HOUSING TO B-1 CLUTCH HOUSING BOLTS (11).
85 CONVERTER HOUSING TO CASE SPACER PLATE.
97 B-1 CLUTCH HOUSING TO PUMP BODY BOLT (7 REQUIRED).
98 B-1 CLUTCH HOUSING AND OIL PUMP COVER ASSEMBLY.

Copyright © 2009 ATSG

Figure 65

Oil Pump And B-1 Clutch Assembly (Cont'd)

12. Install new oil pump bushing as necessary using the proper driver (See Figure 65).
13. Install new converter hub seal into pump body using the proper seal driver (See Figure 65).
14. Turn the oil pump body over and install new "O" ring seal, as shown in Figure 66, and lube with a small amount of Trans-Jel®.
15. Install the oil pump outer gear with the "dot" facing up, or the champfer facing down, as shown in Figure 67.
16. Install oil pump inner gear in either direction, as shown in Figure 67.
17. Measure gear to face clearances with straight edge and feeler gage, as shown in Figure 68.
18. To measure inner gear to crescent clearance, pull the inner gear into tight mesh with outer gear, and measure between teeth of inner gear and crescent, as shown in Figure 69.
19. Any excessive wear equals pump replacement.

Continued on Page 53

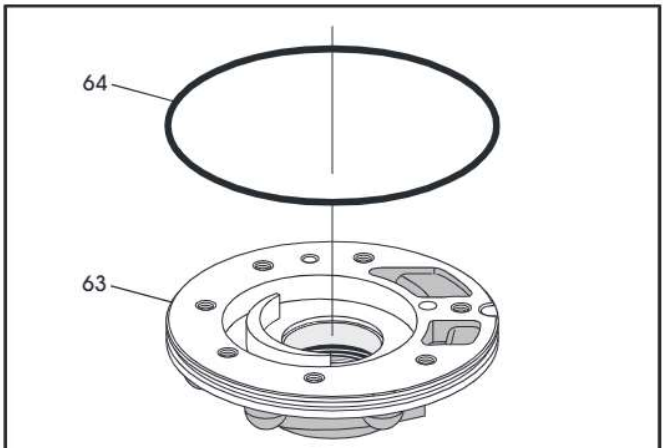

62 OIL PUMP BODY TO CONVERTER HOUSING "O" RING SEAL.
63 OIL PUMP BODY .

Copyright © 2009 ATSG

Figure 66

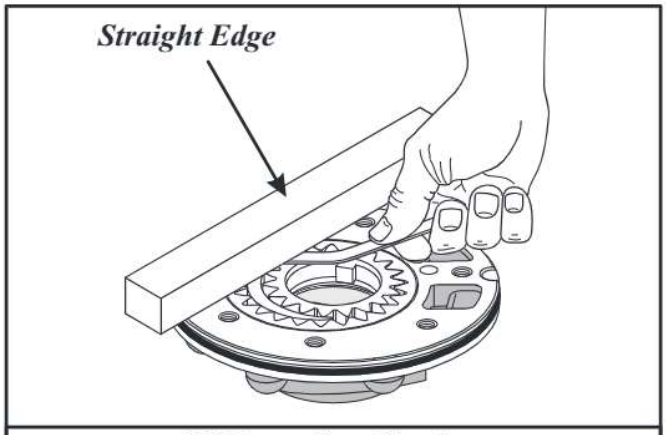

Oil Pump Specifications

COMPONENT	*SPECIFICATION*
INNER GEAR TO FACE	.0008" - .0025"
OUTER GEAR TO FACE	.0008" - .0027"
OUTER GEAR TO BODY	.003" - .005"
INNER GEAR TO CRESCENT	.033" - MAX

Copyright © 2009 ATSG

Figure 68

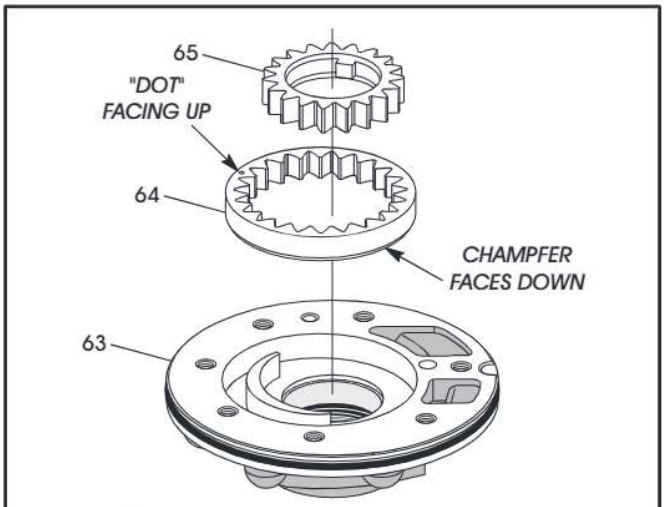

63 OIL PUMP BODY .
64 OIL PUMP OUTER GEAR.
65 OIL PUMP INNER GEAR.

Copyright © 2009 ATSG

Figure 67

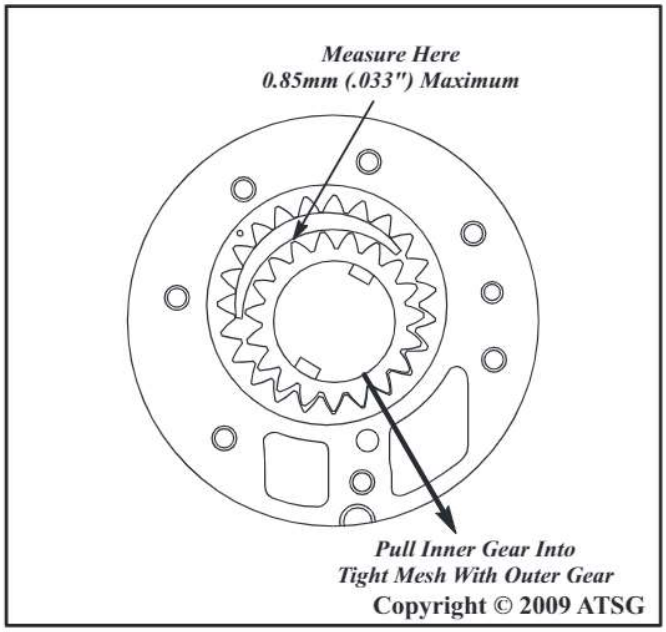

Copyright © 2009 ATSG

Figure 69

Oil Pump And B-1 Clutch Assembly (Cont'd)

20. The B-1 clutch return spring is the diaphragm style, as shown in Figure 70.
21. The snap ring for diaphragm style return spring is "L" shaped, as shown in Figure 70.
    Note: This is to keep return spring centered on the B-1 clutch apply piston.
22. The B-1 clutch apply piston is a molded piston and can be used again if not damaged.
23. The number one thrust bearing is located under a pressed on caged roller bearing on B-1 clutch housing, as shown in Figure 70.
    Note: Neither of these bearings are serviced. If they are damaged, you must replace the B-1 clutch housing. The bushing (95) shown in Figure 70 is also not serviced.

Continued on Page 54

B-1 CLUTCH HOUSING AND PUMP COVER, EXPLODED VIEW

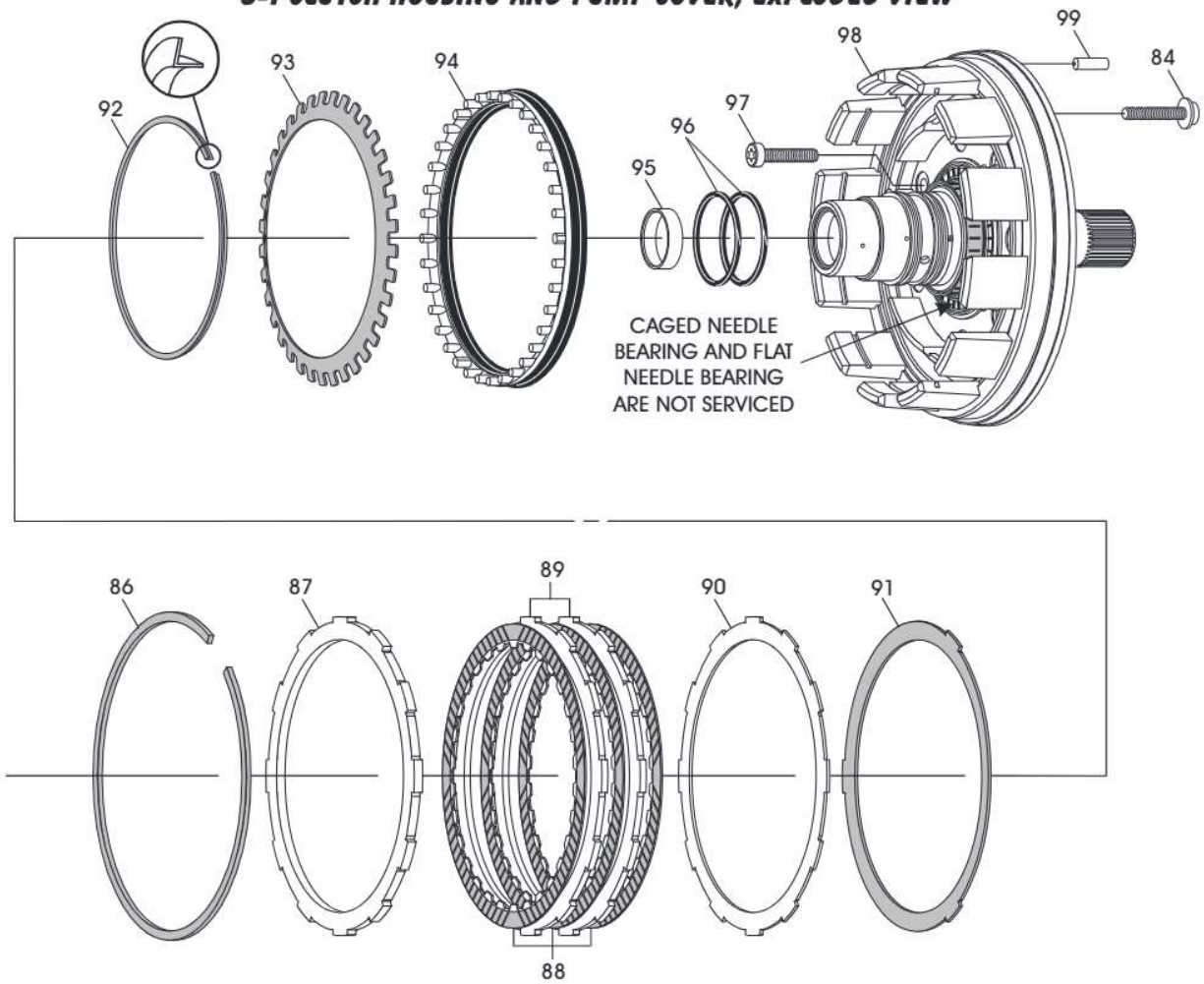

84 B-1 CLUTCH HOUSING RETAINING BOLTS (11 REQUIRED).
86 B-1 CLUTCH BACKING PLATE "*SELECTIVE*" SNAP RING.
87 B-1 CLUTCH BACKING PLATE.
88 B-1 CLUTCH FRICTION PLATES (QTY. VARIES, SEE CHART).
89 B-1 CLUTCH STEEL PLATES (QTY. VARIES, SEE CHART).
90 B-1 CLUTCH APPLY PLATE (.071").
91 B-1 CLUTCH CUSHION PLATE.
92 B-1 CLUTCH PISTON RETURN SPRING "L" SHAPED SNAP RING.
93 B-1 CLUTCH PISTON DIAPHRAGM RETURN SPRING.
94 B-1 CLUTCH MOLDED APPLY PISTON.
95 B-1 CLUTCH HOUSING BUSHING (NOT SERVICED).
96 K-1 CLUTCH SCARF-CUT SEALING RINGS.
97 B-1 CLUTCH HOUSING TO PUMP BOLT (7 REQUIRED).
98 B-1 CLUTCH HOUSING AND PUMP COVER ASSEMBLY.
99 ALIGNMENT DOWEL.

Copyright © 2009 ATSG

Figure 70

Oil Pump And B-1 Clutch Assembly (Cont'd)

24. Ensure that the alignment dowel is in place in the B-1 clutch housing, as shown in Figure 71.
25. Lubricate the B-1 clutch apply piston and the seal surfaces in the housing with small amount of Trans-Jel®.
26. Install the B-1 clutch apply piston, as shown in Figure 72.
27. Install the B-1 clutch return spring, as shown in Figure 72.
28. Compress the return spring using a foot press and install the "L" shaped snap ring, as shown in Figure 72.

Continued on Page 55

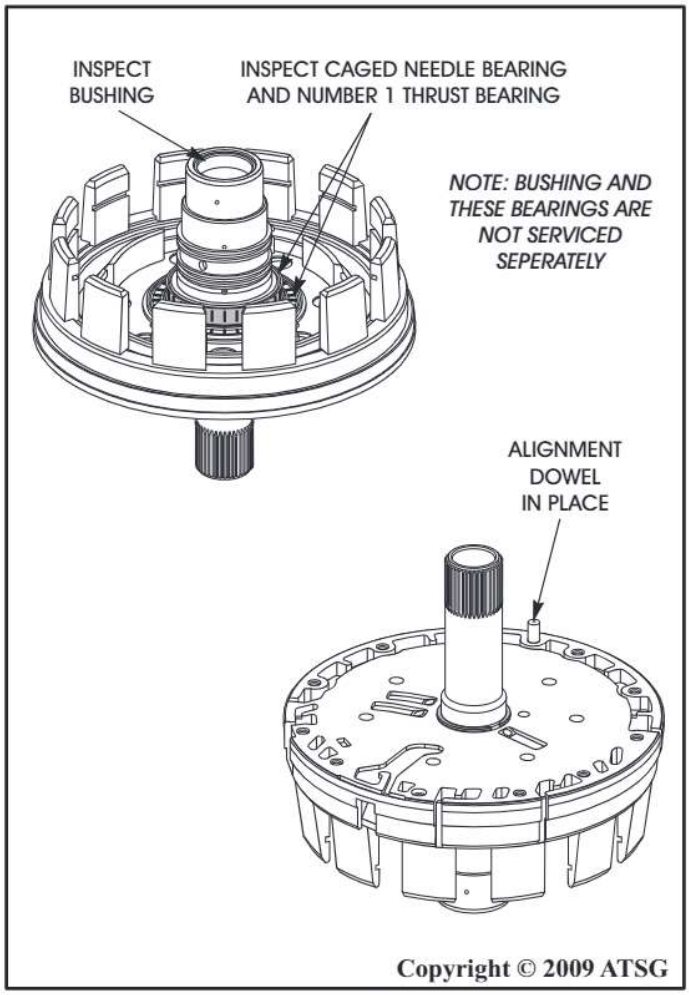

Figure 71

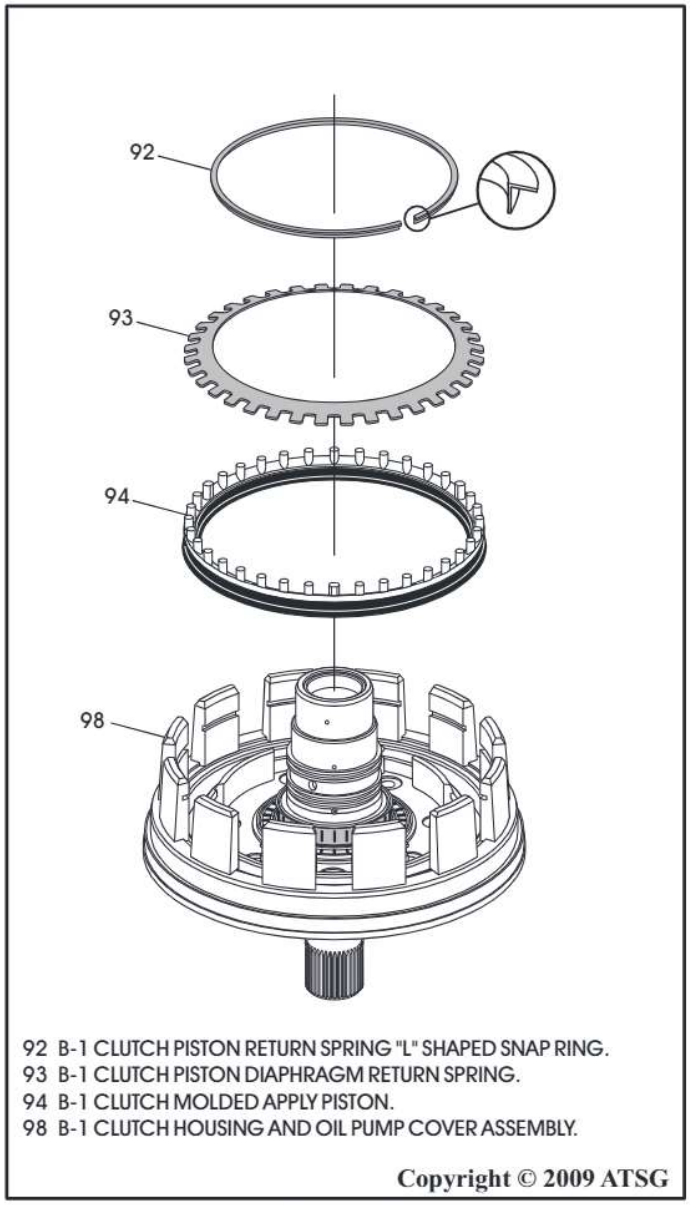

Figure 72

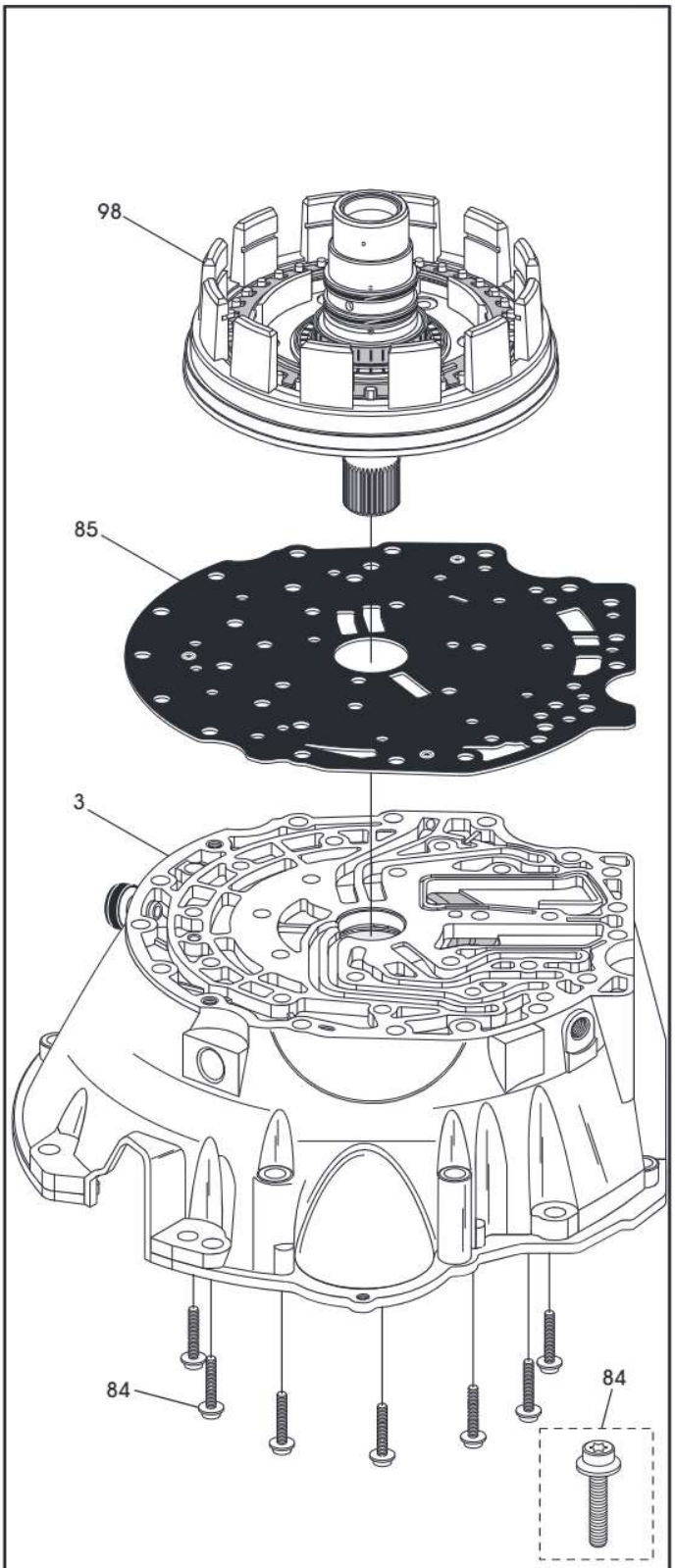

3 TORQUE CONVERTER HOUSING.
84 B-1 CLUTCH HOUSING RETAINING BOLTS (11 REQUIRED).
85 CONVERTER HOUSING TO CASE SPACER PLATE.
98 B-1 CLUTCH HOUSING AND OIL PUMP COVER ASSEMBLY.

Copyright © 2009 ATSG

Figure 73

Oil Pump And B-1 Clutch Assembly (Cont'd)

29. Place the converter housing face down on flat work surface, as shown in Figure 73.
30. Place converter housing to case spacer plate on converter housing, as shown in Figure 73.
31. Install the B-1 clutch housing with piston onto spacer plate, as shown in Figure 73.
32. Install the eleven clutch housing retaining bolts as shown in Figure 73.
33. Torque the B-1 clutch housing retaining bolts to 10 N·m (88 in.lb.) (See Figure 74).

Continued on Page 56

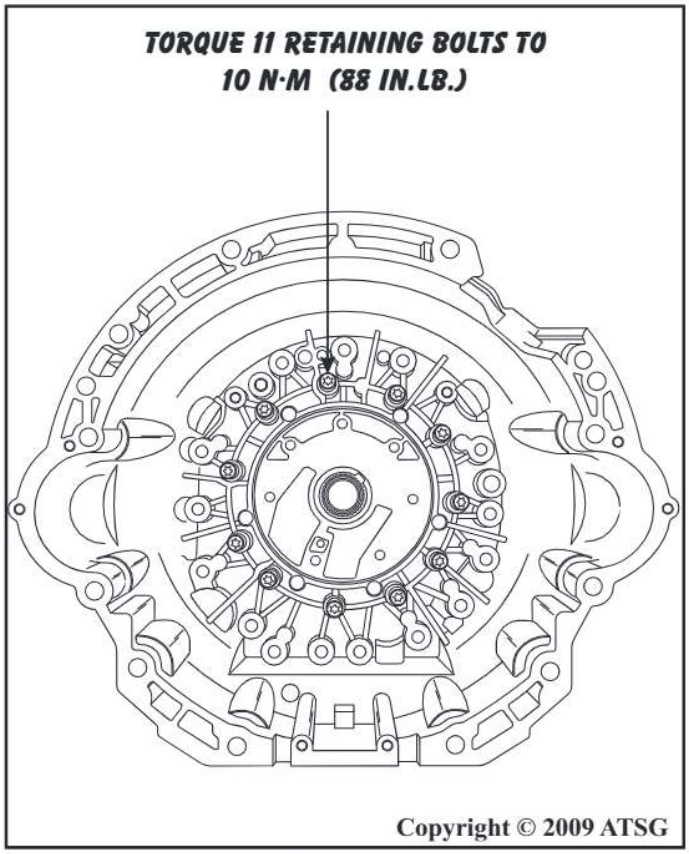

Copyright © 2009 ATSG

Figure 74

Oil Pump And B-1 Clutch Assembly (Cont'd)

34. Lube the oil pump gears with the proper fluid, and the pump "O" ring with Trans-Jel®.
35. Install the completed oil pump into converter housing pocket, as shown in Figure 75.
36. Align the pump holes using a No. 2 phillips screwdriver and install the 7 clutch housing to oil pump bolts, as shown in Figure 75.
37. Torque the clutch housing to oil pump bolts to 20 N·m (14 ft.lb.) using 40 Torx bit, as shown in Figure 76.
38. Install two new K-1 clutch sealing rings into B-1 clutch housing, as shown in Figure 77.

Continued on Page 57

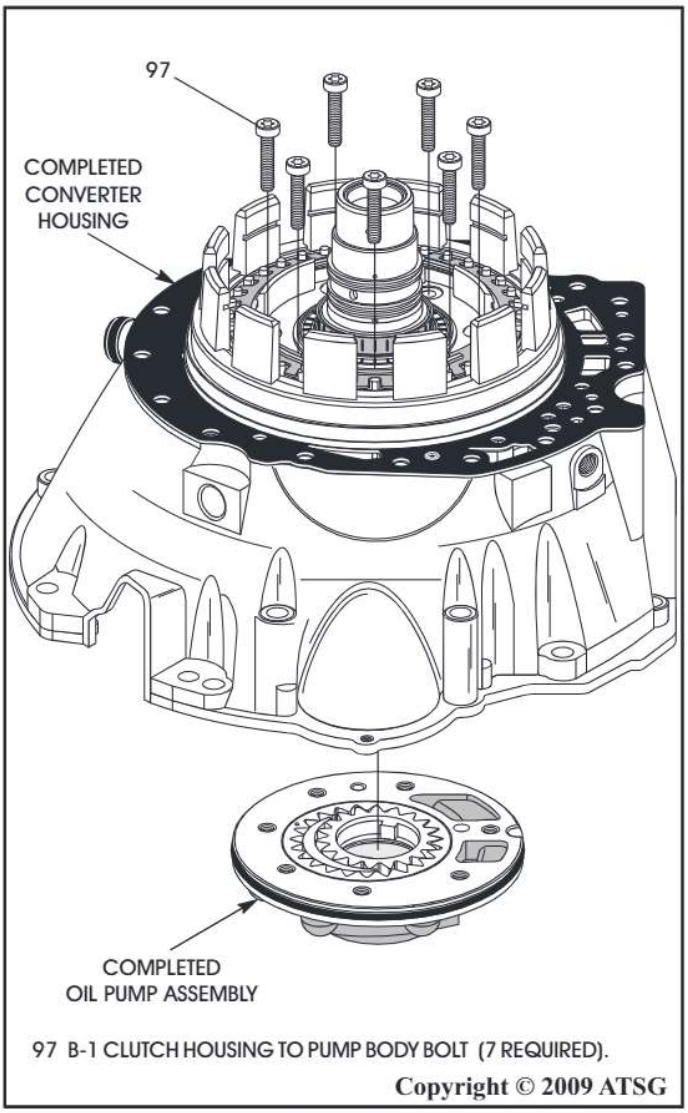

Figure 75

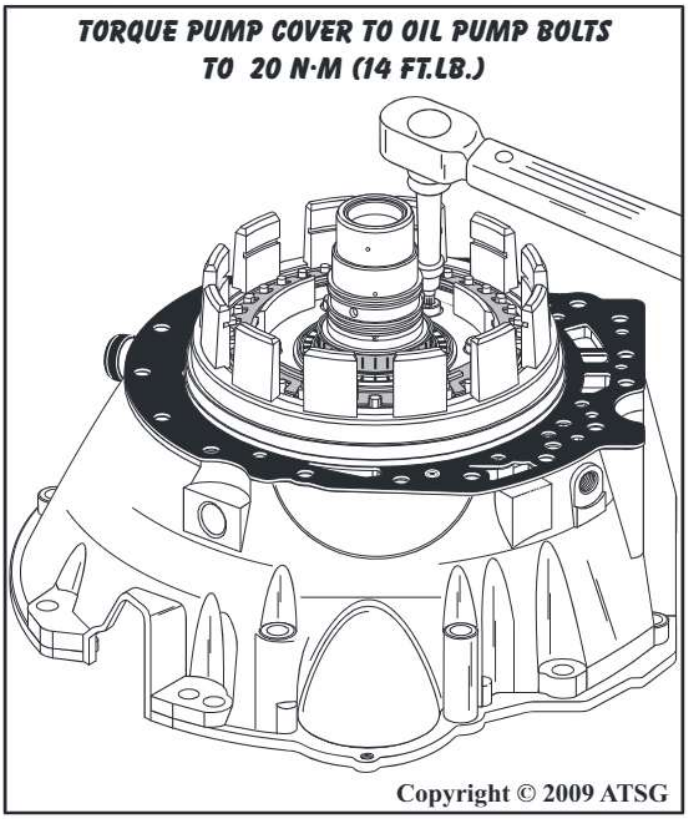

Figure 76

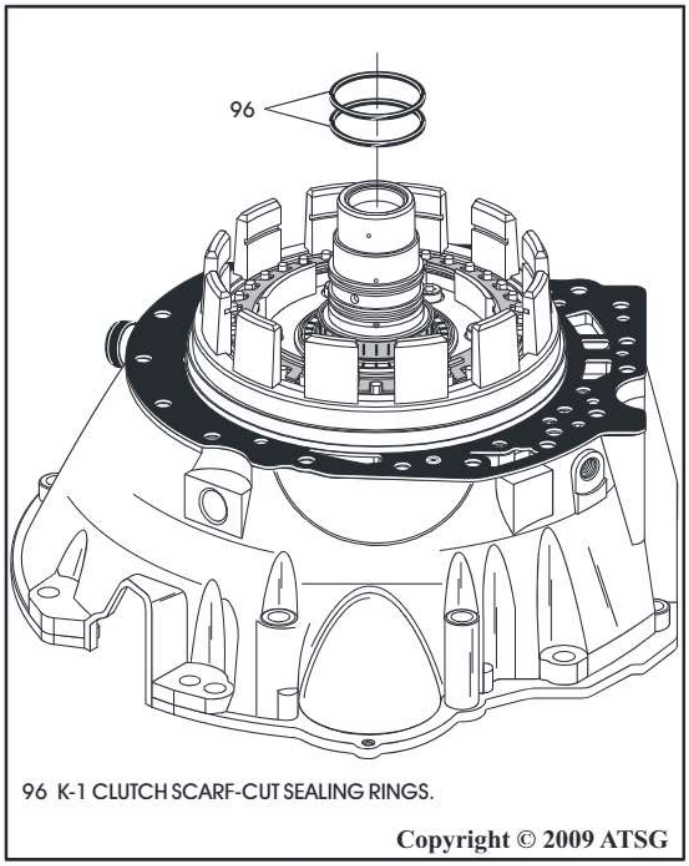

Figure 77

Oil Pump And B-1 Clutch Assembly (Cont'd)

39. Use caution when installing B-1 clutch plates.
    Caution: The B-1 clutch may have 2, 3, or 4 "double-sided" friction plates depending on the model. Refer to the chart in Figure 78 for reference.
    Later models may also use "single-sided" friction plates. We will cover the assembly process for both.
    All friction plates should be soaked in proper fluid for 30 minutes before installation.

"Double-Sided" Clutch Plates

40. Install the B-1 clutch "dished" cushion plate in direction shown in Figure 79.
41. Install the .071" thick apply plate, as shown in Figure 79.
42. Install "double-sided" frictions beginning with a friction plate and alternating with steel plates, as shown in Figure 79.
    Note: Steel plate thickness will vary depending on snap ring groove location and number of frictions required.
43. Install the B-1 clutch backing plate, as shown in Figure 79.
44. Install the B-1 clutch *selective* snap ring, as shown in Figure 79.

Continued on Page 58

B-1 CLUTCH QUANTITY CHART BY MODEL

TRANSMISSION MODEL	LINED PLATE	STEEL PLATE	BACK. PLATE	THIN APPLY PLATE
722.600/660	2	1	1	1
722.601/602/603/610	2	1	1	1
722.604/606/609/617	3	2	1	1
722.605/607/608/611/614 618/662/664/699	3	2	1	1
722.665	3	2	1	1
722.620/621/624/626/627 628/630/633/636/666	4	3	1	1
722.622/623/625 631/632/663/669	3	2	1	1
722.629/634/661	4	3	1	1

The number of B-1 friction plates used is model dependant and determined by the backing plate snap ring location and the thickness of the steel plates.

Copyright © 2009 ATSG

Figure 78

B-1 "DOUBLE-SIDED FRICTIONS

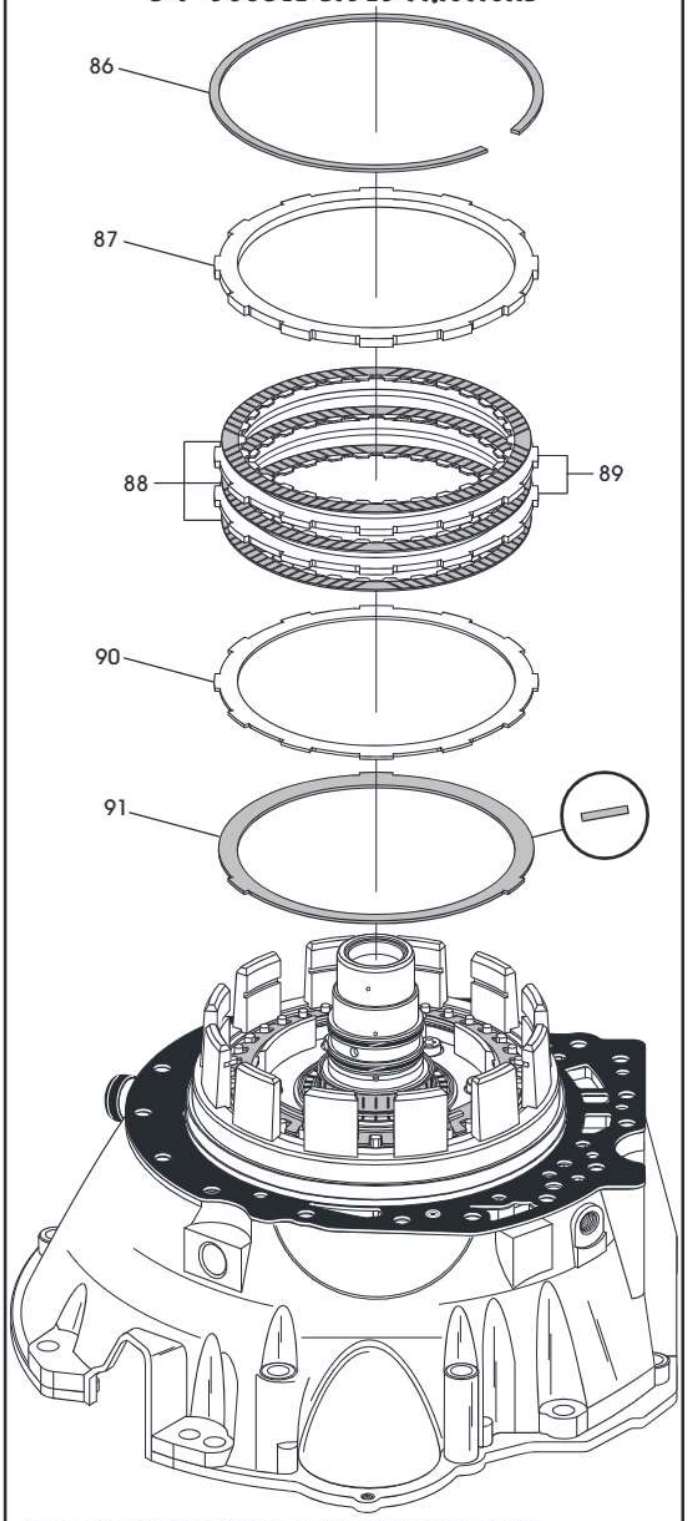

86 B-1 CLUTCH BACKING PLATE "*SELECTIVE*" SNAP RING.
87 B-1 CLUTCH BACKING PLATE.
88 B-1 CLUTCH "DOUBLE-SIDED" FRICTION PLATES (QTY. VARIES).
89 B-1 CLUTCH STEEL PLATES (QTY. VARIES).
90 B-1 CLUTCH APPLY PLATE (.071").
91 B-1 CLUTCH DISHED CUSHION PLATE.

Copyright © 2009 ATSG

Figure 79

Oil Pump And B-1 Clutch Assembly (Cont'd)
"Single-Sided" Clutch Plates

45. Install the B-1 clutch "dished" cushion plate in direction shown in Figure 81.
    Note: .071" apply plate is not used in the "single-sided" stack-up.
46. Install the "single-sided" frictions beginning with an external spline plate and alternating with an internal spline plate, as shown in Figure 81, until you have the proper amount of plates installed.
47. Install the B-1 clutch backing plate, as shown in Figure 81.
48. Install the B-1 clutch *selective* snap ring, as shown in Figure 81.

Continued on Page 59

B-1 CLUTCH QUANTITY CHART BY MODEL

TRANSMISSION MODEL	LINED PLATE	STEEL PLATE	BACK. PLATE	THIN APPLY PLATE
722.600/660	2	1	1	1
722.601/602/603/610	2	1	1	1
722.604/606/609/617	3	2	1	1
722.605/607/608/611/614 618/662/664/699	3	2	1	1
722.665	3	2	1	1
722.620/621/624/626/627 628/630/633/636/666	4	3	1	1
722.622/623/625 631/632/663/669	3	2	1	1
722.629/634/661	4	3	1	1

The number of B-1 friction plates used is model dependant and determined by the backing plate snap ring location and the thickness of the steel plates.

Copyright © 2009 ATSG

Figure 80

B-1 "SINGLE-SIDED" FRICTIONS

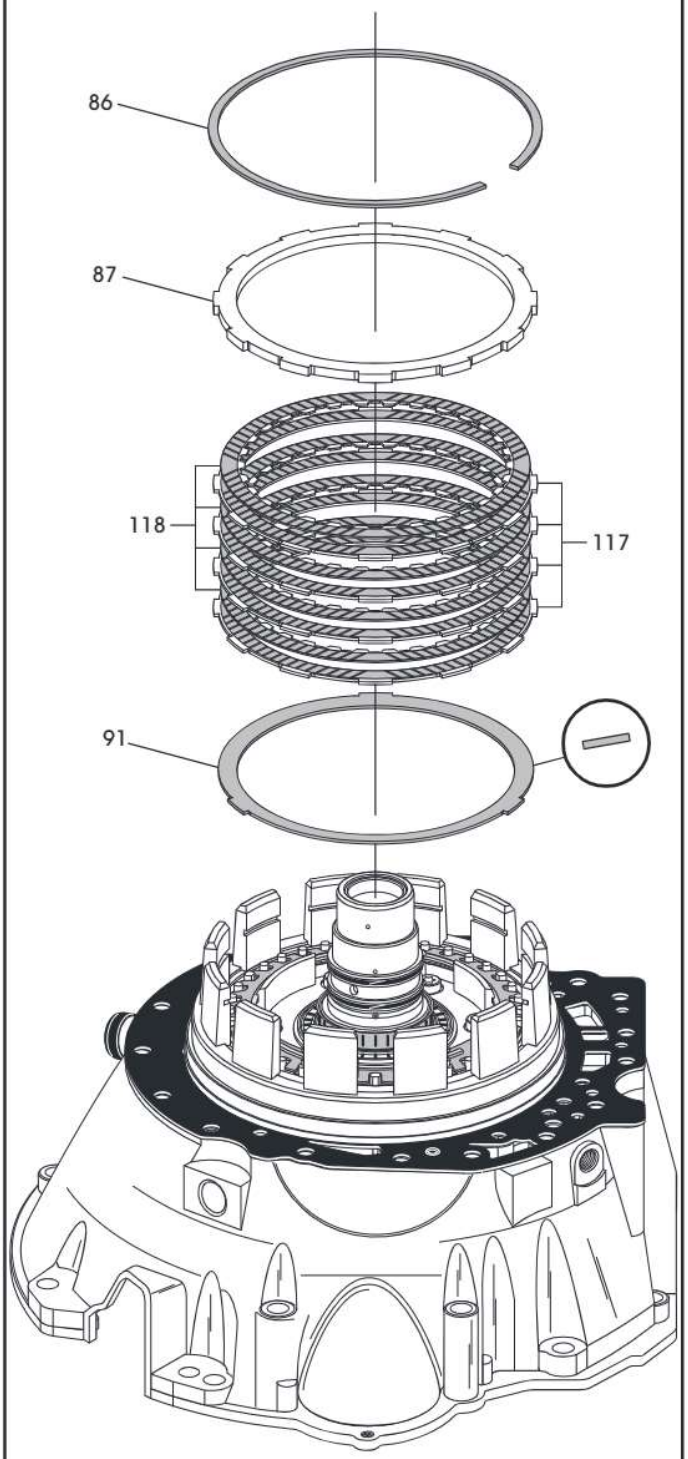

86 B-1 CLUTCH BACKING PLATE "*SELECTIVE*" SNAP RING.
87 B-1 CLUTCH BACKING PLATE.
91 B-1 CLUTCH CUSHION PLATE.
117 B-1 "SINGLE-SIDED" EXTERNAL SPLINE FRICTION PLATES.
118 B-1 "SINGLE-SIDED INTERNAL SPLINE FRICTION PLATES.

Copyright © 2009 ATSG

Figure 81

Oil Pump And B-1 Clutch Assembly (Cont'd)

49. Measure B-1 clutch clearance using a feeler gauge between the selective snap ring and the backing plate, as shown in Figure 83.
50. B-1 clutch clearance will depend on how many friction plates are used in the pack. The proper clearances for each are listed in Figure 83. ***Note: ATSG clutch clearances vary from the Mercedes specification, as Mercedes uses a rather costly tool to compress the cushion plate in the clutch pack.***
51. Change the selective snap ring as necessary to obtain the proper clutch clearance. There are 4 different thickness' available and listed in Figure 83.
52. We have provided you with frequently used part numbers for the clutches in Figure 82. Keep in mind that part numbers can change without notice.
53. Set the completed converter housing, oil pump, B-1 clutch assembly aside for final assembly.

Component Rebuild
Continued on Page 60

B-1 CLUTCH CUT-AWAY

Double-Sided Stack | ***Single-Sided Stack***

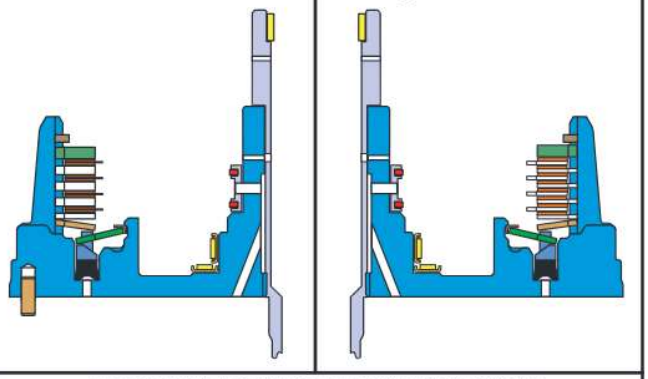

B-1 CLUTCH MOST FREQUENTLY USED PLATES		
USAGE	THICKNESS	PART NUMBER
BACKING PLATE	3.98 MM (.157")	140 272 04 26
STEEL PLATE	3.5 MM (.138")	140 272 03 26
STEEL PLATE	2.8 MM (.110")	140 272 28 26
APPLY PLATE	1.8 MM (.071")	140 272 02 26
FRICTION PLATE	2.14 MM (.084")	140 272 00 25

B-1 "SINGLE-SIDED" MOST FREQUENTLY USED PLATES		
USAGE	THICKNESS	PART NUMBER
BACKING PLATE	3.98 MM (.157")	140 272 04 26
FRICTION (INT-30 SPLINE)	2.07 MM (.081")	52108507AA
FRICTION (EXT-12 SPLINE)	2.07 MM (.081")	52108508AA

Copyright © 2009 ATSG

Figure 82

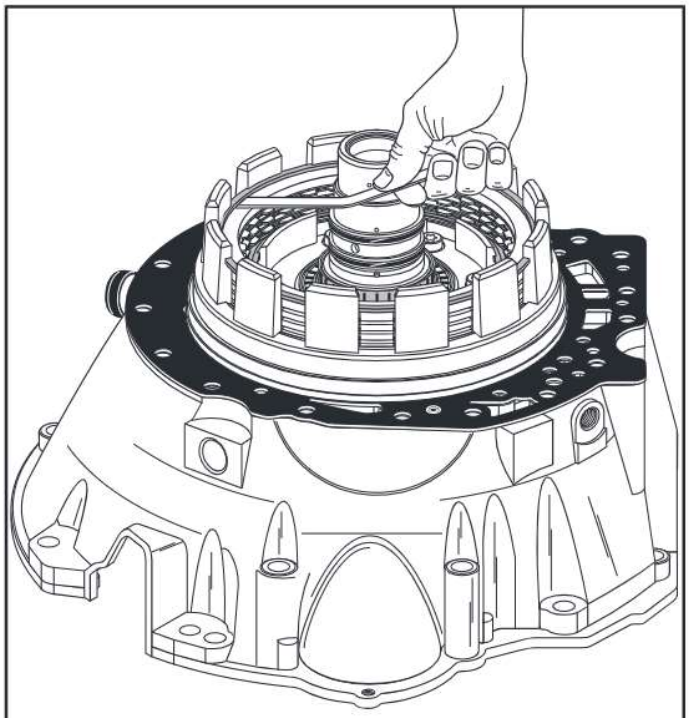

B-1 "Double-Sided" Clutch Clearance Should Be;
2 Frictions = 0.5 - 0.8mm (.020" - .031")
3 Frictions = 0.8 - 1.0mm (.031" - .040")
4 Frictions = 1.0 - 1.3mm (.040" - .051")

B-1 "Single-Sided" Clutch Clearance Should Be;
4 Friction = 0.5 - 0.8mm (.020" - .031")
6 Frictions = 0.8 - 1.0mm (.031" - .040")
8 Frictions = 1.0 - 1.3mm (.040" - .051")

B-1 CLUTCH SELECTIVE SNAP RINGS	
THICKNESS	PART NUMBER
2.5 MM (.098")	140 994 87 40
2.8 MM (.110")	140 994 88 40
3.1 MM (.123")	140 994 89 40
3.7 MM (.146")	140 994 30 35

Copyright © 2009 ATSG

Figure 83

K1 CLUTCH HOUSING, EXPLODED VIEW

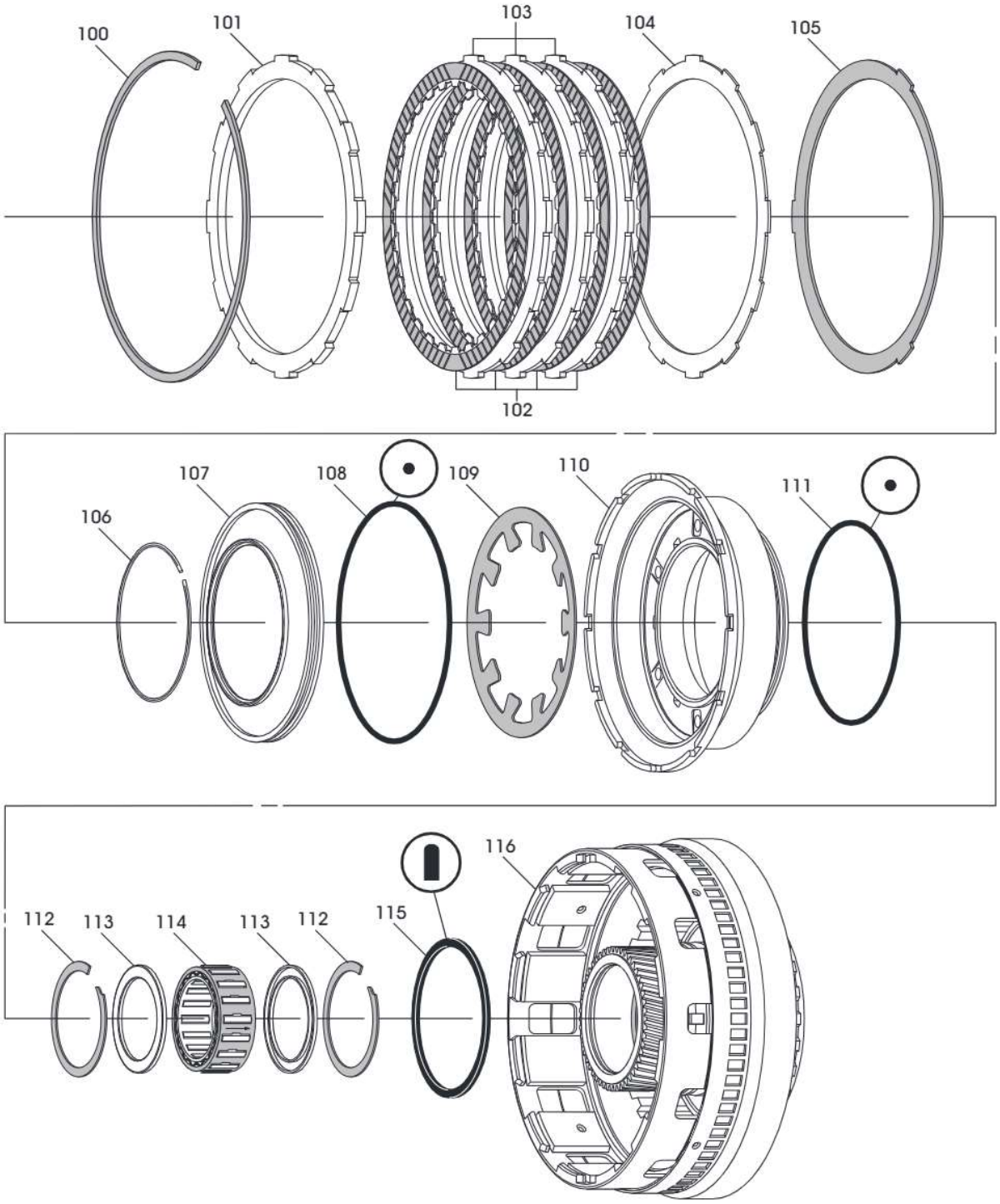

100 K-1 CLUTCH BACKING PLATE "SELECTIVE" SNAP RING.
101 K-1 CLUTCH BACKING PLATE.
102 K-1 CLUTCH FRICTION PLATES (QUANTITY VARIES).
103 K-1 CLUTCH STEEL PLATES (QUANTITY VARIES).
104 K-1 CLUTCH APPLY PLATE (.070").
105 K-1 CLUTCH CUSHION PLATE.
106 K-1 CLUTCH PISTON RETAINER SNAP RING.
107 K-1 CLUTCH BALANCE PISTON.
108 K-1 CLUTCH BALANCE PISTON "O" RING SEAL.
109 K-1 CLUTCH PISTON RETURN SPRING.
110 K-1 CLUTCH APPLY PISTON.
111 K-1 CLUTCH PISTON OUTER "O" RING SEAL.
112 F-1 SPRAG SNAP RING (2 REQUIRED).
113 F-1 SPRAG END BEARINGS (2 REQUIRED).
114 F-1 SPRAG ASSEMBLY.
115 K-1 CLUTCH PISTON INNER "D" RING SEAL.
116 K-1 CLUTCH HOUSING ASSEMBLY.

Copyright © 2009 ATSG

Figure 84

COMPONENT REBUILD (CONT'D)

K-1 Clutch Housing Assembly

1. Disassemble the K-1 clutch housing using Figure 84 as a guide.
   Note: Not necessary to remove bottom snap ring for the F-1 sprag.
2. Clean all K-1 clutch housing parts thoroughly and dry with compressed air.
3. Inspect all K-1 clutch housing parts thoroughly for any wear and/or damage.
   Note: There are three different design levels of the F-1 sprag assembly. Refer to Figure 85 to determine which one you have.

Continued on Page 62

F-1 SPRAG IDENTIFICATION

1ST DESIGN	2ND DESIGN	3RD DESIGN
Mercedes Part Number	*Mercedes Part Number*	*Mercedes Part Number*
210 270 00 31	*722 270 00 31*	*772 270 02 31*
11 Element	*20 Element*	*20 Element*
(Not Recommended)	*(OK To Use)*	*Thicker End Bearings*
		(OK To Use)
BLACK PLASTIC OUTER CAGE	BROWN PLASTIC OUTER CAGE	BROWN PLASTIC OUTER CAGE
ASSEMBLED HEIGHT 21.46 MM (.845")	ASSEMBLED HEIGHT 21.46 MM (.845")	ASSEMBLED HEIGHT 23.37 MM (.920")
END BEARING THICKNESS 3.02 MM (.119")	END BEARING THICKNESS 3.02 MM (.119")	END BEARING THICKNESS 3.99 MM (.157")

112 F-1 SPRAG SNAP RING (2 REQUIRED).
113 F-1 SPRAG END BEARINGS (2 REQUIRED).
114 F-1 SPRAG ASSEMBLY.

INTERCHANGEABILITY

1st Design, Not recommended for use in any models.
2nd Design, Will back service all previous models equipped with the 11 element sprag.
3rd Design, Will back service all previous models but also requires a new K-1 clutch housing, as snap ring grooves are relocated to accommodate thicker end bearings.

Copyright © 2009 ATSG

Figure 85

COMPONENT REBUILD (CONT'D)

K-1 Clutch Housing Assembly (Cont'd)

4. Install new "O" ring seal on the K-1 clutch balance piston, as shown in Figure 86, and lube with small amount of Trans-Jel®.
5. Turn the balance piston over and install the apply piston return spring in direction shown in Figure 87.
   Note: Use a liberal amount of Trans-Jel to hold return spring in place as it gets turned over for installation. The balance piston acts as a centering device for the spring and it is difficult to install unless you use this method.
6. Install a new "O" ring seal on the K-1 clutch apply piston, as shown in Figure 88, and lube with a small amount of Trans-Jel®.

Continued on Page 63

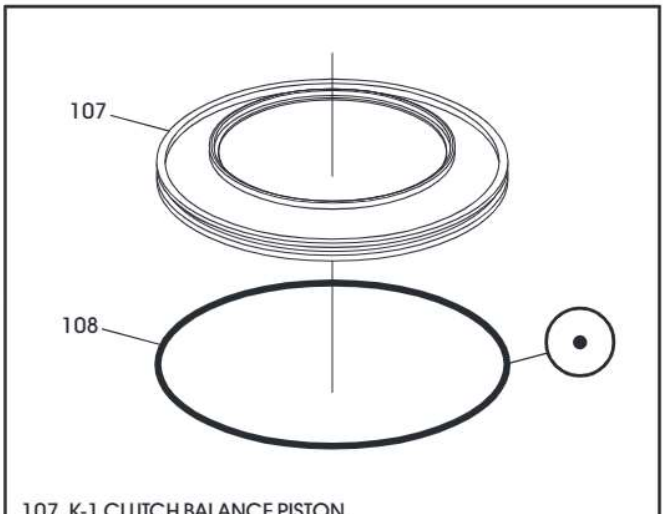

107 K-1 CLUTCH BALANCE PISTON.
108 K-1 CLUTCH BALANCE PISTON "O" RING SEAL.

Copyright © 2009 ATSG

Figure 86

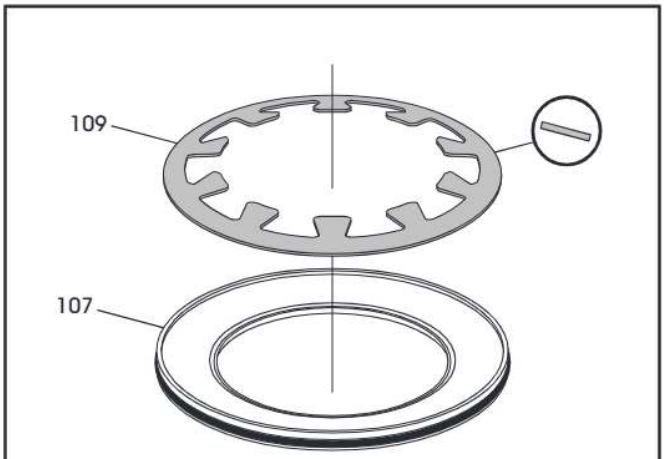

107 K-1 CLUTCH BALANCE PISTON WITH "O" RING SEAL.
109 K-1 CLUTCH APPLY PISTON RETURN SPRING.

Copyright © 2009 ATSG

Figure 87

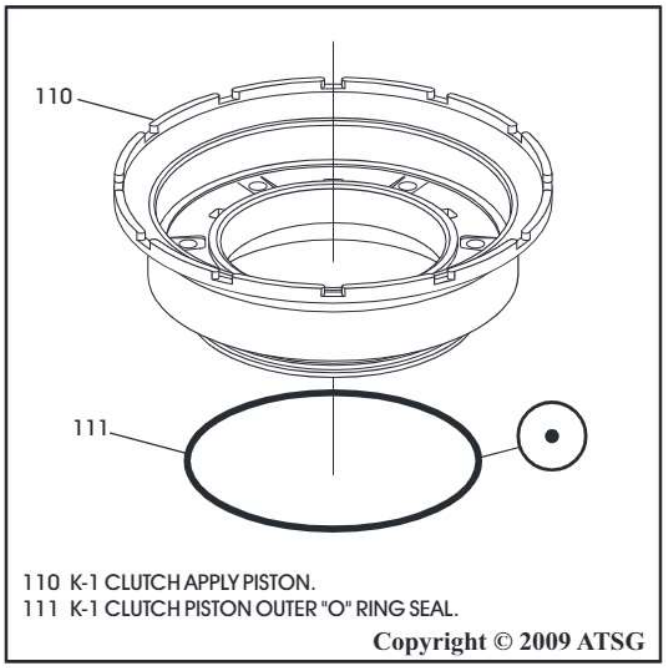

110 K-1 CLUTCH APPLY PISTON.
111 K-1 CLUTCH PISTON OUTER "O" RING SEAL.

Copyright © 2009 ATSG

Figure 88

COMPONENT REBUILD (CONT'D)

K-1 Clutch Housing Assembly (Cont'd)

7. Install new "D" ring seal into the K-1 clutch housing, as shown in Figure 89, and lube with a small amount of Trans-Jel®.
8. Ensure that the bottom snap ring for F-1 sprag is in place, as shown in Figure 89.
9. Install the first end bearing on top of the snap ring with the lips facinng up, as shown in Figure 89.
10. Install the F-1 sprag assembly with the arrow facing down, as shown in Figure 89.
11. Install the second end bearing with the lips facing down, as shown in Figure 89.
12. Install the second snap ring on top of the end bearing, as shown in Figure 89, and ensure that it is fully seated.
13. Install the K-1 clutch housing onto the B-1 clutch housing, as shown in Figure 90.
14. The K-1 clutch housing should freewheel in counter-clockwise direction and lock in the clockwise direction, as shown in Figure 90.
15. If it does not, you have the sprag in upside down.

Continued on Page 64

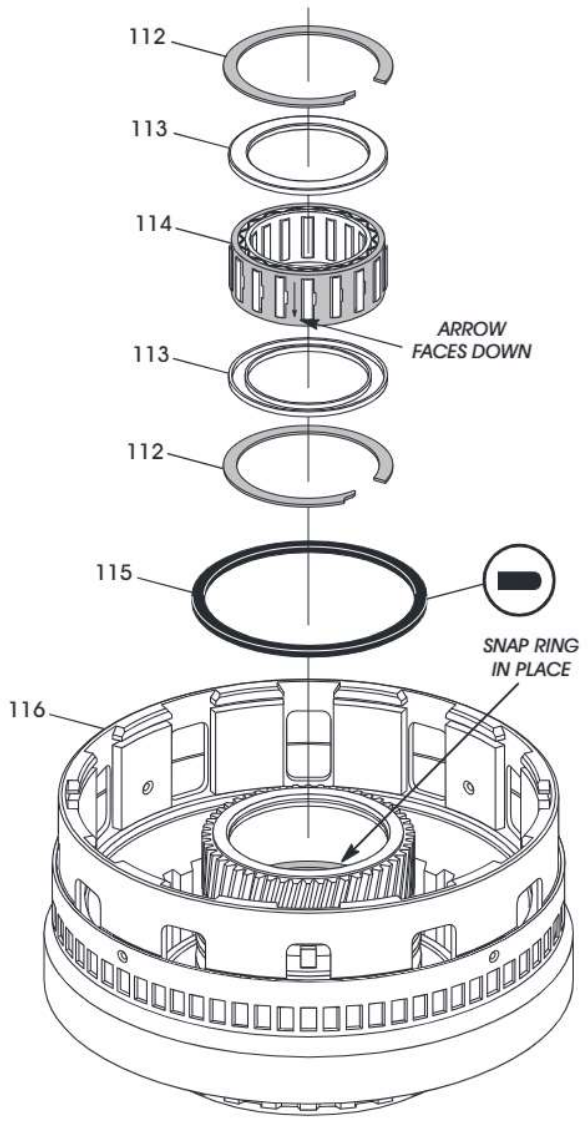

112 F1 SPRAG SNAP RING (2 REQUIRED).
113 F1 SPRAG END BEARINGS (2 REQUIRED).
114 F1 SPRAG ASSEMBLY.
115 K1 CLUTCH PISTON INNER "D" RING SEAL.
116 K1 CLUTCH HOUSING ASSEMBLY.

Copyright © 2009 ATSG

Figure 89

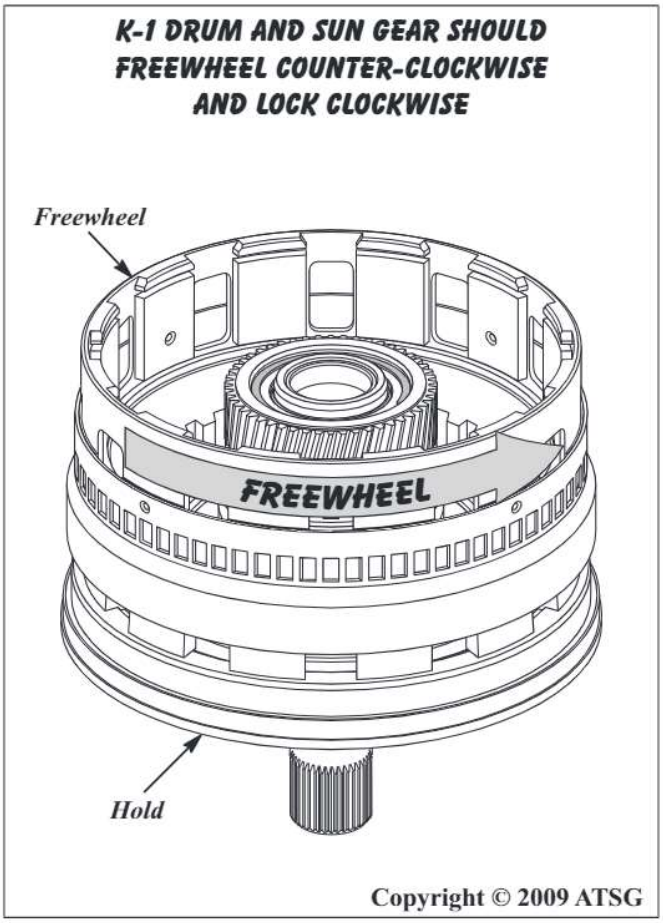

Copyright © 2009 ATSG

Figure 90

COMPONENT REBUILD (CONT'D)

K-1 Clutch Housing Assembly (Cont'd)

16. Install the K-1 clutch apply piston in housing, as shown in Figure 91, using care so as not to cut the seals.
17. Install the K-1 clutch balance piston, with the "bellville" return spring stuck to the balance piston, as shown in Figure 91.
18. Compress and install the circlip style snap ring, as shown in Figure 91.
19. Use caution when installing K-1 clutch plates.
    Caution: The K-1 clutch may have 3, 4, 5, or 6 "double-sided" friction plates depending on the model. Refer to the chart in Figure 92 for reference.
    Later models may also use "single-sided" friction plates. We will cover the assembly process for both.
    All friction plates should be soaked in proper fluid for 30 minutes before installation.

Continued on Page 65

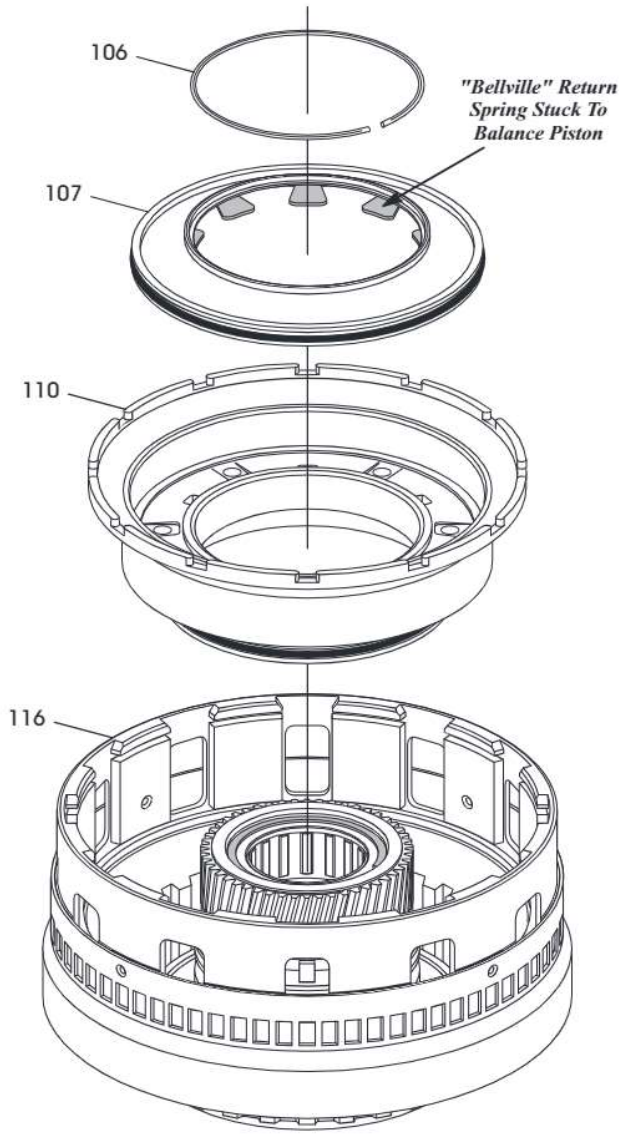

106 K-1 CLUTCH PISTON RETAINER SNAP RING.
107 K-1 CLUTCH BALANCE PISTON WITH RETURN SPRING.
110 K-1 CLUTCH APPLY PISTON.
116 K-1 CLUTCH HOUSING ASSEMBLY.

Copyright © 2009 ATSG

Figure 91

K-1 CLUTCH QUANTITY CHART BY MODEL

TRANSMISSION MODEL	LINED PLATE	STEEL PLATE	BACK. PLATE	THIN APPLY PLATE
722.600/660	3	2	1	1
722.601/602/603/610	3	2	1	1
722.604/606/609/617	4	3	1	1
722.605/607/608/611/614 618/662/664/699	4	3	1	1
722.665	4	3	1	1
722.620/621/624/626/627 628/630/633/636/666	6	5	1	1
722.622/623/625 631/632/663/669	5	4	1	1
722.629/634/661	5	4	1	1

The number of K-1 friction plates used is model dependant and determined by the backing plate snap ring location and the thickness of the steel plates.

Copyright © 2009 ATSG

Figure 92

K-1 Clutch Housing Assembly (Cont'd)
"Double-Sided" Clutch Plates

20. Install the K-1 clutch "dished" cushion plate in the direction shown in Figure 94.
21. Install the K-1 clutch .071" thick apply plate, as shown in Figure 94.
22. Install "double-sided" clutches beginning with friction plate and alternating with steel plates, as shown in Figure 94, until you have proper number of plates installed.
    Note: Steel plate thickness will vary depending on snap ring groove location and number of frictions required. (See chart Figure 93).
23. Install the K-1 clutch backing plate, as shown in Figure 94.
24. Install the K-1 clutch *selective* snap ring, as shown in Figure 94.

Continued on Page 66

K-1 CLUTCH CUT-AWAY

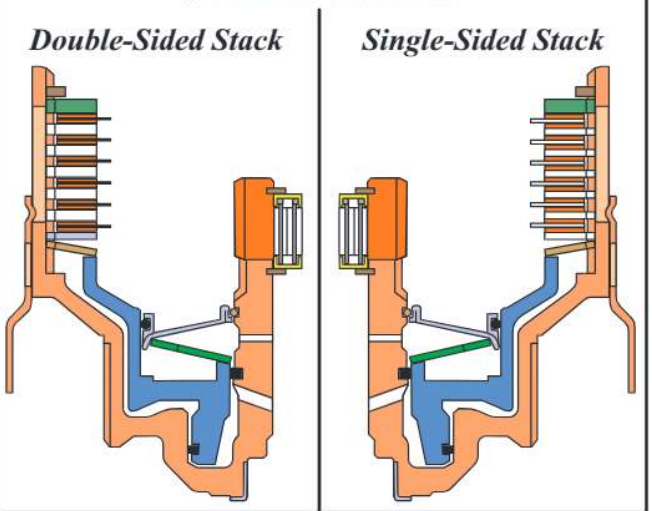

K-1 "REGULAR" MOST FREQUENTLY USED PLATES		
USAGE	*THICKNESS*	*PART NUMBER*
BACKING PLATE	3.98 MM (.157")	140 272 04 26
STEEL PLATE	3.5 MM (.138")	140 272 03 26
STEEL PLATE	2.8 MM (.110")	140 272 28 26
APPLY PLATE	1.8 MM (.071")	140 272 02 26
FRICTION PLATE	2.14 MM (.084")	140 272 00 25

K-1 "SINGLE-SIDED" MOST FREQUENTLY USED PLATES		
USAGE	*THICKNESS*	*PART NUMBER*
BACKING PLATE	3.98 MM (.157")	140 272 04 26
FRICTION (INT-30 SPLINE)	2.07 MM (.081")	52108507AA
FRICTION (EXT-12 SPLINE)	2.07 MM (.081")	52108508AA

Copyright © 2009 ATSG

Figure 93

"DOUBLE-SIDED" STACK-UP

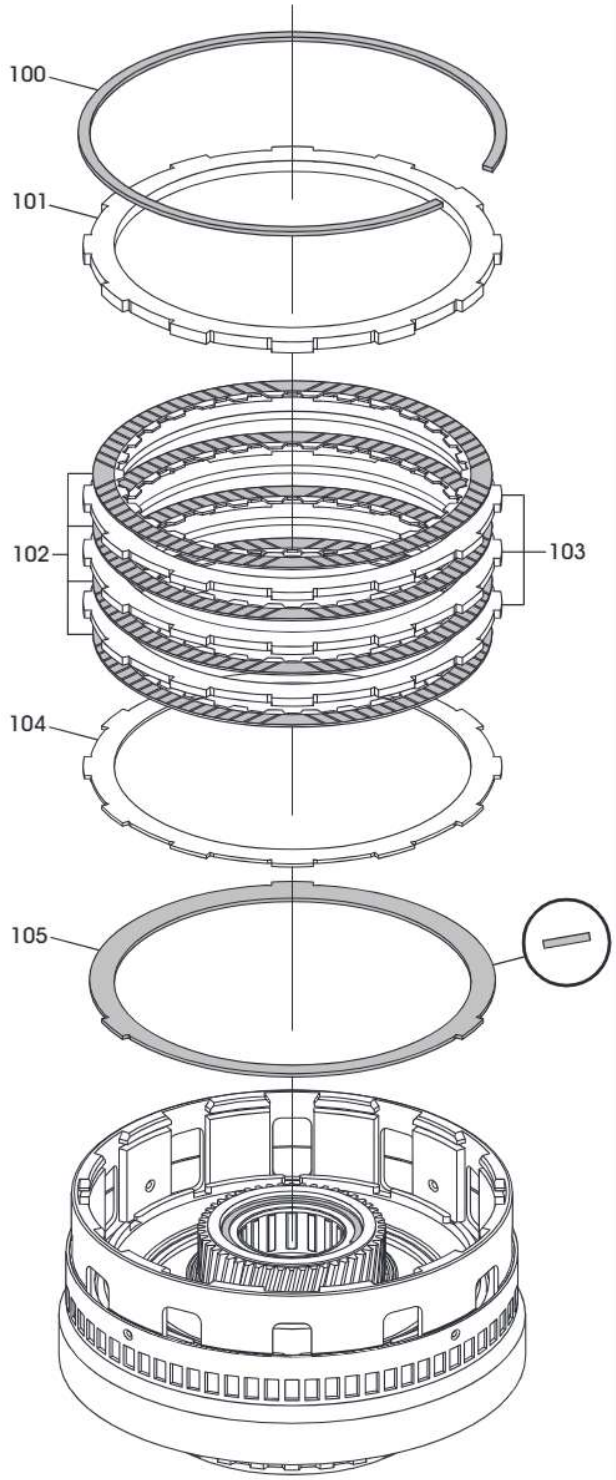

100 K-1 CLUTCH BACKING PLATE "*SELECTIVE*" SNAP RING.
101 K-1 CLUTCH BACKING PLATE.
102 K-1 CLUTCH FRICTION PLATES (QUANTITY VARIES).
103 K-1 CLUTCH STEEL PLATES (QUANTITY VARIES).
104 K-1 CLUTCH APPLY PLATE (.071").
105 K-1 CLUTCH CUSHION PLATE.
116 K-1 CLUTCH HOUSING ASSEMBLY.

Copyright © 2009 ATSG

Figure 94

K-1 Clutch Housing Assembly (Cont'd)
"Single-Sided" Clutch Plates

25. Install the K-1 clutch "dished" cushion plate in the direction shown in Figure 96.
    Note: .071" apply plate is not used in the "Single-Sided" stack-up.
26. Install the "single-sided" frictions beginning with an external spline plate and alternating with an internal spline plate, as shown in Figure 96, until you have the proper amount of plates installed.
27. Install the K-1 clutch backing plate, as shown in Figure 96.
28. Install the K-1 clutch *selective* snap ring, as shown in Figure 96.

Continued on Page 67

K-1 CLUTCH CUT-AWAY

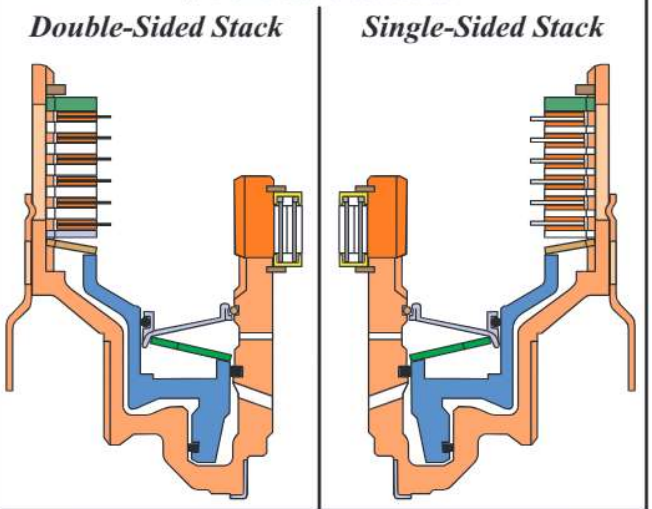

K-1 "REGULAR" MOST FREQUENTLY USED PLATES		
USAGE	THICKNESS	PART NUMBER
BACKING PLATE	3.98 MM (.157")	140 272 04 26
STEEL PLATE	3.5 MM (.138")	140 272 03 26
STEEL PLATE	2.8 MM (.110")	140 272 28 26
APPLY PLATE	1.8 MM (.071")	140 272 02 26
FRICTION PLATE	2.14 MM (.084")	140 272 00 25

K-1 "SINGLE-SIDED" MOST FREQUENTLY USED PLATES		
USAGE	THICKNESS	PART NUMBER
BACKING PLATE	3.98 MM (.157")	140 272 04 26
FRICTION (INT-30 SPLINE)	2.07 MM (.081")	52108507AA
FRICTION (EXT-12 SPLINE)	2.07 MM (.081")	52108508AA

Copyright © 2009 ATSG

Figure 95

"SINGLE-SIDED" STACK-UP

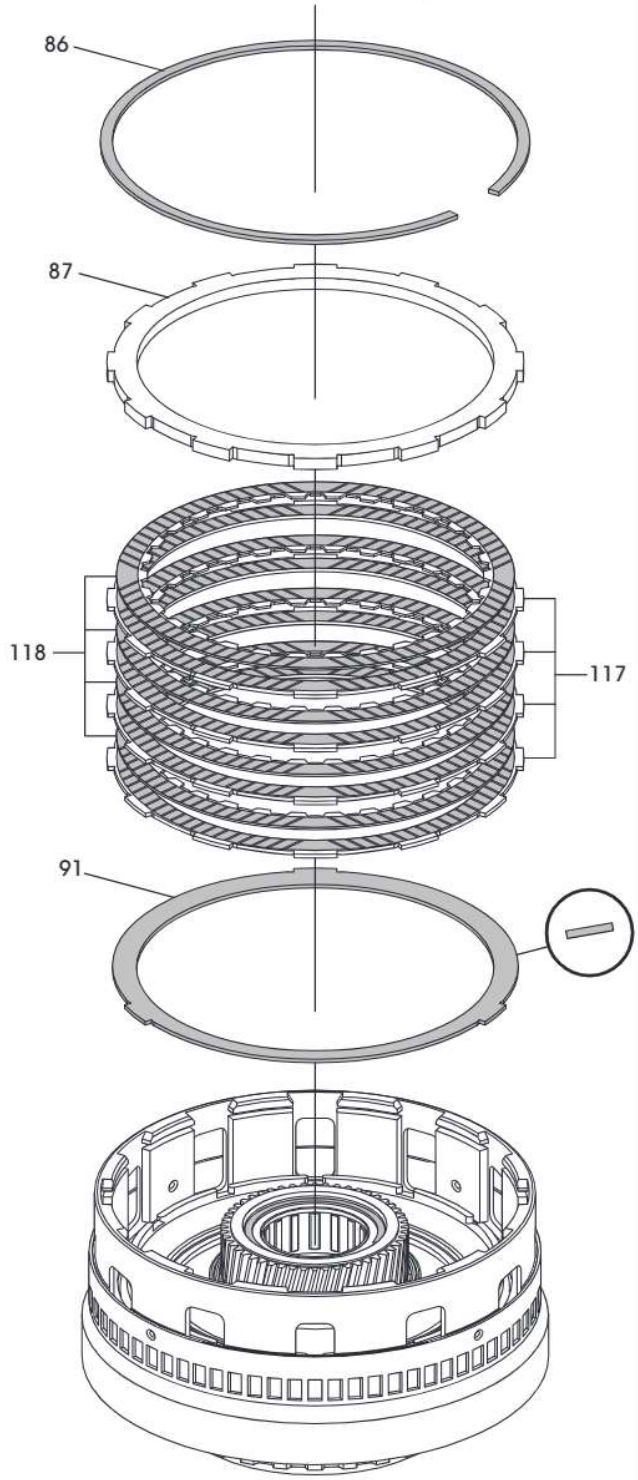

100 K-1 CLUTCH BACKING PLATE "*SELECTIVE*" SNAP RING.
101 K-1 CLUTCH BACKING PLATE.
105 K-1 CLUTCH CUSHION PLATE.
116 K-1 CLUTCH HOUSING ASSEMBLY.
117 K-1 CLUTCH "EXTERNAL SPLINE" SINGLE-SIDED PLATES.
118 K-1 CLUTCH "INTERNAL SPLINE" SINGLE-SIDED PLATES.

Copyright © 2009 ATSG

Figure 96

K-1 Clutch Housing Assembly (Cont'd)

29. Measure K-1 clutch clearance using a feeler gauge between the selective snap ring and the backing plate, as shown in Figure 97.
30. K-1 clutch clearance will depend on how many friction plates are used in the pack. The proper clearances for each are listed in Figure 97. ***Note: ATSG clutch clearances vary from the Mercedes specification, as Mercedes uses a rather costly tool to compress the cushion plate in the clutch pack.***
31. Change the selective snap ring as necessary to obtain the proper clutch clearance. There are 5 different snap ring thickness' available and are listed in Figure 97.
32. We have provided you with frequently used part numbers for the clutches in Figure 95. Keep in mind that part numbers can change without notice.
33. Set the completed K-1 clutch housing assembly aside for the final assembly process.

Component Rebuild
Continued on Page 68

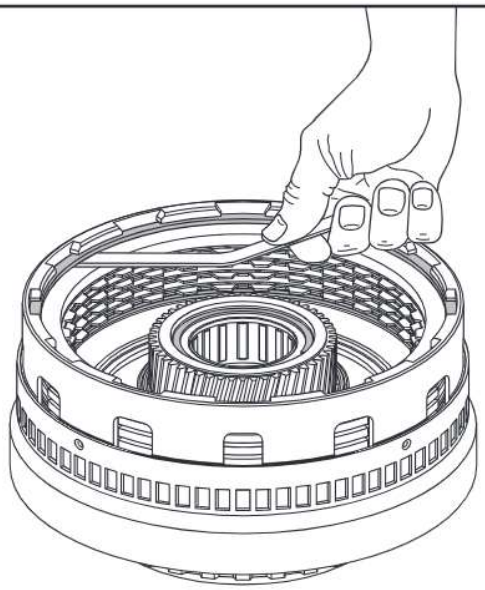

K-1 "Double-Sided" Clutch Clearance Should Be;
3 Frictions = 0.8 - 1.0mm (.031" - .040")
4 Frictions = 1.0 - 1.3mm (.040" - .051")
5 Frictions = 1.3 - 1.6mm (.051" - .062")
6 Frictions = 1.5 - 1.8mm (.059" - .070")

K-1 "Single-Sided" Clutch Clearance Should Be;
6 Frictions = 0.8 - 1.0mm (.031" - .040")
8 Frictions = 1.0 - 1.3mm (.040" - .051")
10 Frictions = 1.3 - 1.6mm (.051" - .062")
12 Frictions = 1.6 - 1.9mm (.062" - .074")

K-1 CLUTCH SELECTIVE SNAP RINGS	
THICKNESS	PART NUMBER
2.5 MM (.098")	140 994 87 40
2.8 MM (.110")	140 994 88 40
3.1 MM (.122")	140 994 89 40
3.4 MM (.134")	140 994 29 35
3.7 MM (.146")	140 994 30 35

Copyright © 2009 ATSG

Figure 97

COMPONENT REBUILD (CONT'D)

K-2 Clutch Housing Assembly

1. The K-2 clutch housing assembly consists of two components, the K-2 clutch housing and the K-2 shell assembly.
2. Remove the snap ring and rear planetary ring gear, as shown in Figure 98.
3. Seperate the K-2 clutch housing and K-2 shell assembly, as shown in Figure 99.

Continued on Page 70

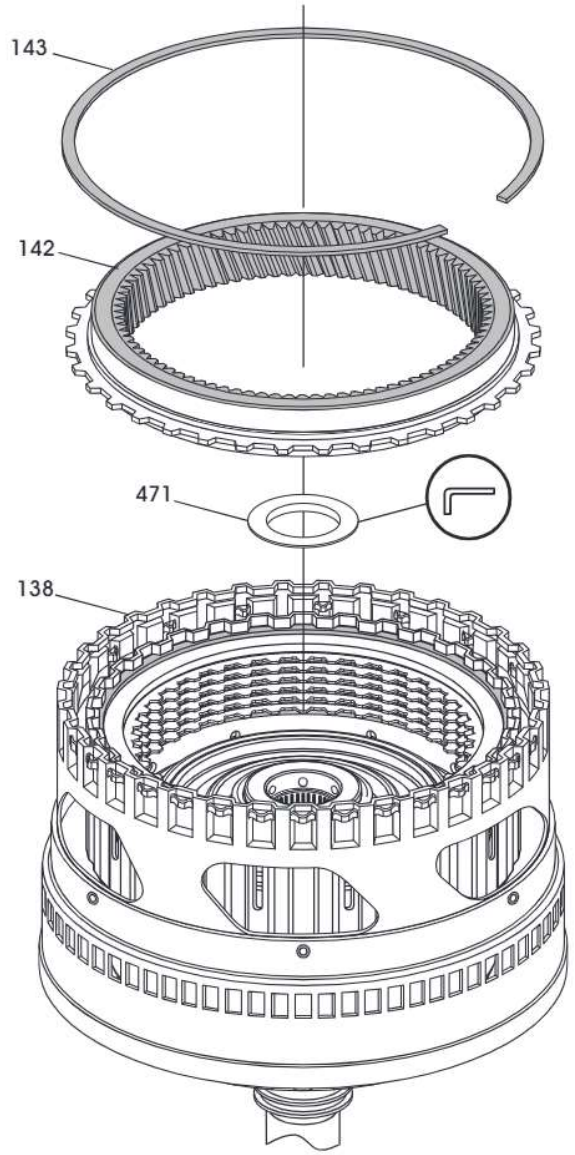

138 K-2 SHELL WITH K-2 CLUTCH HOUSING INSTALLED.
142 REAR PLANETARY INTERNAL RING GEAR.
143 REAR PLANETARY RING GEAR RETAINING SNAP RING.
471 NUMBER 4 THRUST BEARING RACE.

Copyright © 2009 ATSG

Figure 98

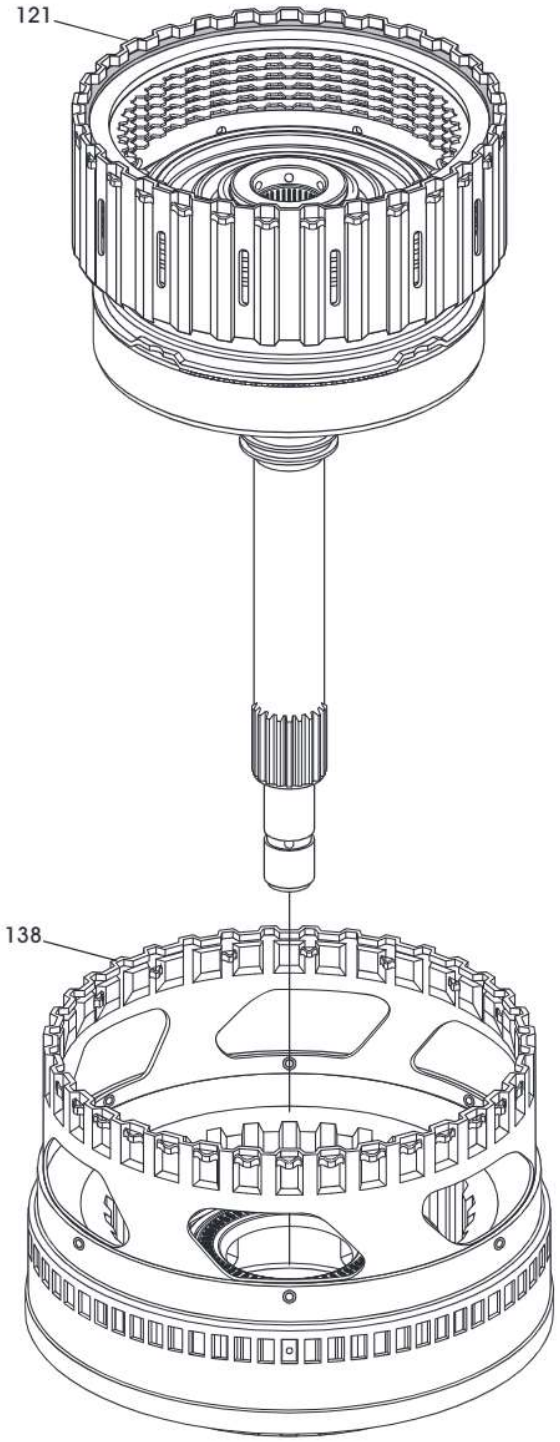

121 K-2 CLUTCH HOUSING ASSEMBLY.
138 K-2 SHELL AND K-1 CLUTCH HUB, WITH FRONT PLANETARY.

Copyright © 2009 ATSG

Figure 99

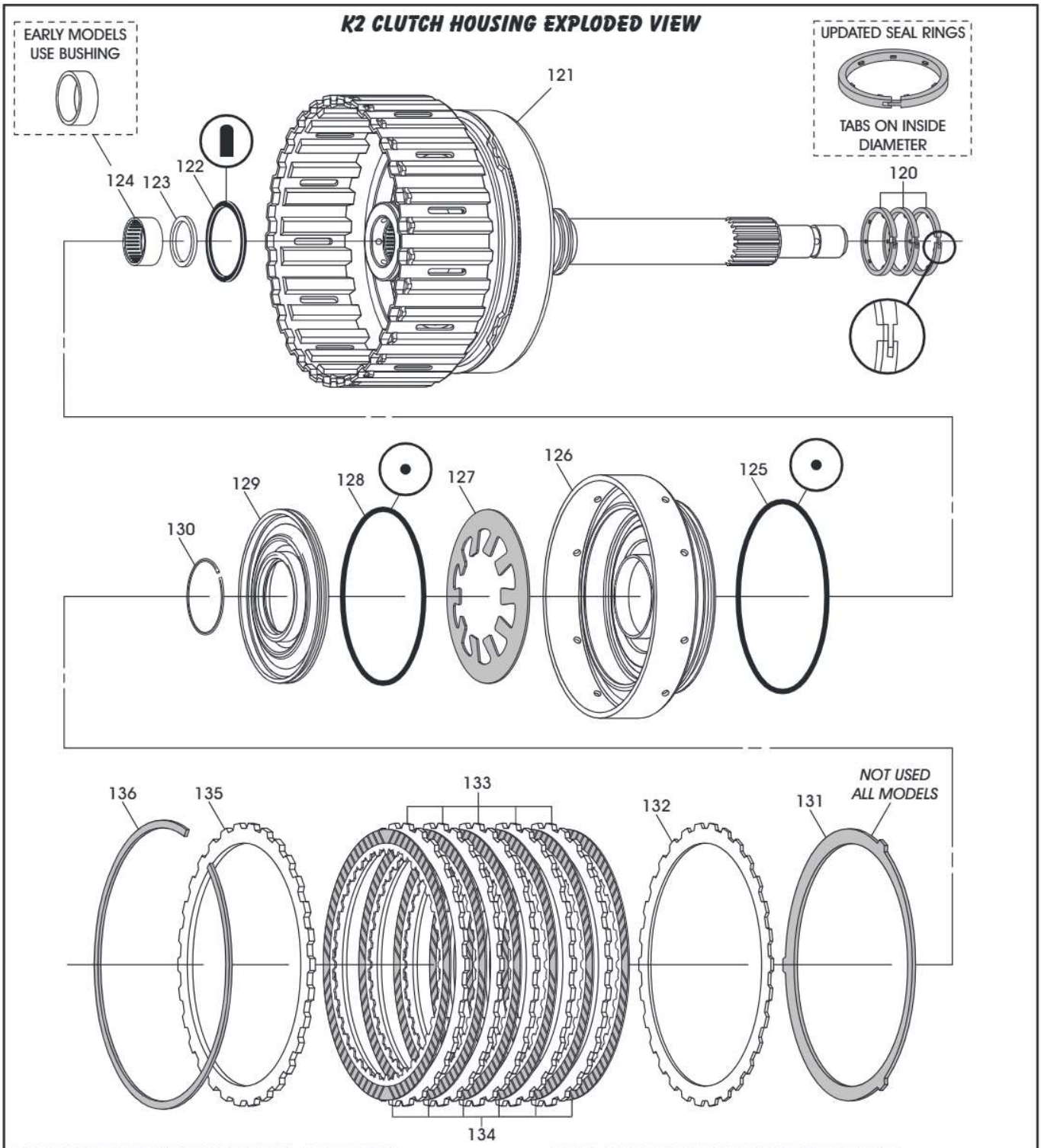

120 TURBINE SHAFT VESPEL SEAL RINGS (3 REQUIRED).
121 K-2 CLUTCH HOUSING ASSEMBLY.
122 K-2 CLUTCH INNER PISTON "D" RING SEAL.
123 K-2 CLUTCH HOUSING TEFLON SEAL (NEW DESIGN).
124 K-2 CLUTCH HOUSING CAGED NEEDLE BEARING.
125 K-2 CLUTCH APPLY PISTON OUTER "O" RING SEAL.
126 K-2 CLUTCH APPLY PISTON.
127 K-2 CLUTCH APPLY PISTON RETURN SPRING.
128 K-2 BALANCE PISTON "O" RING SEAL.
129 K-2 BALANCE PISTON AND SPRING RETAINER.
130 K-2 BALANCE PISTON CIR-CLIP SNAP RING.
131 K-2 CLUTCH CUSHION PLATE.
132 K-2 CLUTCH APPLY PLATE, .071" THICK.
133 K-2 CLUTCH STEEL PLATES, .110" THICK (QTY VARIES).
134 K-2 CLUTCH FRICTION PLATES (QTY VARIES - SEE CHART).
135 K-2 CLUTCH BACKING PLATE, .138" THICK.
136 K-2 CLUTCH "*SELECTIVE*" SNAP RING.

Copyright © 2009 ATSG

Figure 100

COMPONENT REBUILD (CONT'D)

K-2 Clutch Housing Assembly (Cont'd)

4. For the rebuild process we will begin with the K-2 clutch housing and then the K-2 shell.
5. Disassemble the K-2 clutch housing using Figure 100 as a guide.
6. Clean all K-2 clutch housing parts thoroughly and dry with compressed air.
7. Inspect all K-2 clutch housing parts thoroughly for any wear and/or damage.

Caution: There are currently two different housings for the K-2 clutch, with different dimensions. One that uses a bushing and one that uses a caged needle bearing. This change also affects the dimensionsons of the output shaft.
Refer to Figure 101 for the dimensions and identification.

Continued on Page 71

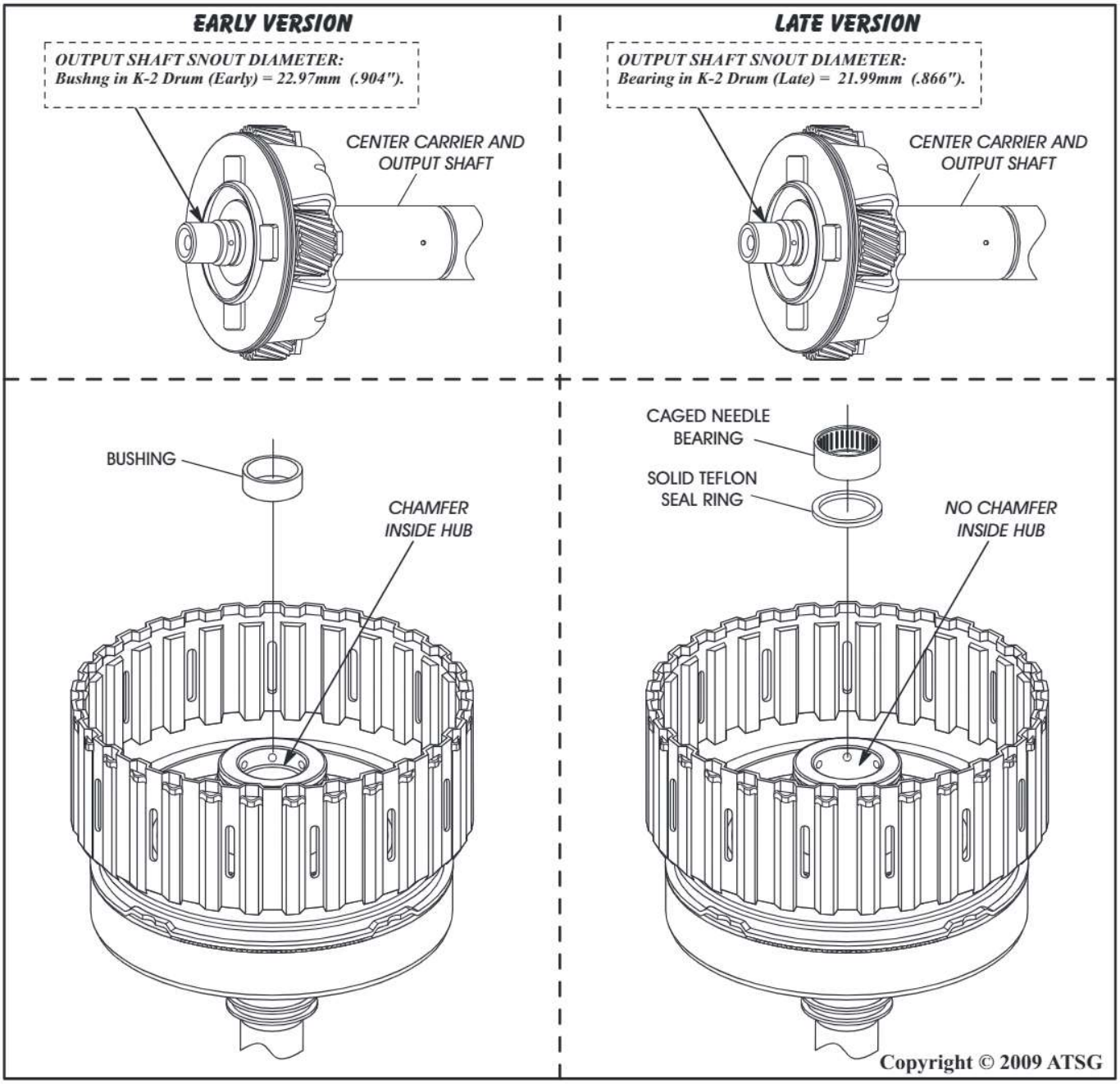

Figure 101

COMPONENT REBUILD (CONT'D)

K-2 Clutch Housing Assembly (Cont'd)

8. Install new "O" ring seal onto the K-2 clutch balance piston, as shown in Figure 102, and lube with small amount of Trans-Jel.
9. Install new "O" ring seal onto the K-2 clutch apply piston, as shown in Figure 103, and lube with small amount of Trans-Jel®.
10. Install new "D" ring seal into the K-2 clutch housing, as shown in Figure 104, and lube with a small amount of Trans-Jel®.
11. This would be the time to install a new bushing into the housing, if you have the early style, and it is deemed necessary.

Special Note: It is common to encounter premature failure of the bushing inside the K-2 clutch drum which pilots the output shaft causing complete planetary failure. Later models have been upgraded to a Teflon sealing ring and caged needle bearing arrangement. Upgrade packages for early designs are available from Mercedes. The upgrade package includes a new K-2 clutch drum and output shaft as the pilot diameter changed dimensions, to accommodate the caged needle bearing. You must also select the correct gear ratio package to avoid gear ratio errors after rebuild. If a complete failure has not occurred with the bushing style K-2 clutch drum and the bushing needs to be replaced, the bushing can be acquired through aftermarket sources such as Sonnax or Independent transmissions.

Continued on Page 72

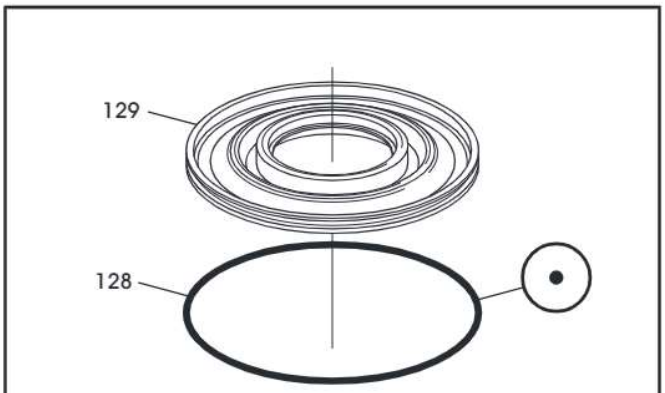

128 K-2 BALANCE PISTON "O" RING SEAL.
129 K-2 BALANCE PISTON AND SPRING RETAINER.

Copyright © 2009 ATSG

Figure 102

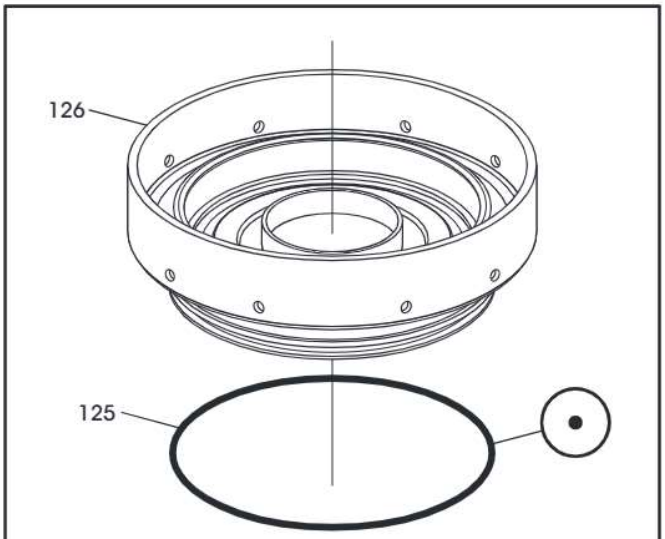

125 K-2 CLUTCH APPLY PISTON OUTER "O" RING SEAL.
126 K-2 CLUTCH APPLY PISTON.

Copyright © 2009 ATSG

Figure 103

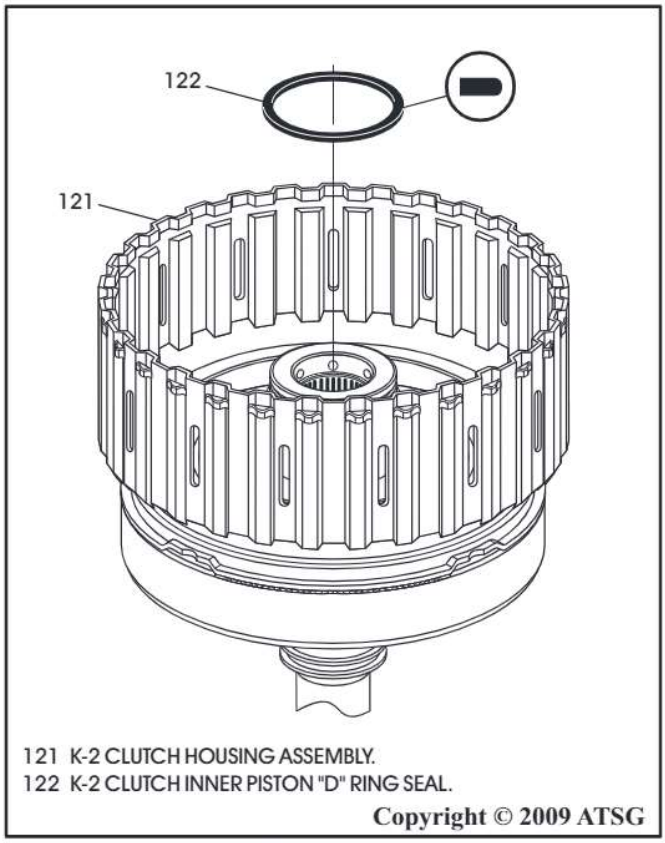

121 K-2 CLUTCH HOUSING ASSEMBLY.
122 K-2 CLUTCH INNER PISTON "D" RING SEAL.

Copyright © 2009 ATSG

Figure 104

COMPONENT REBUILD (CONT'D)

K-2 Clutch Housing Assembly (Cont'd)

12. Install the K-2 clutch apply piston into the K-2 clutch housing, as shown in Figure 105.
13. Install K-2 clutch apply piston return spring on the K-2 apply piston in the direction shown in Figure 106.
14. Install the K-2 balance piston, as shown in Figure 106.
15. Compress the assembly on a foot press, install the circlip snap ring, as shown in Figure 106 and ensure it is fully seated.
16. Install the K-2 clutch dished cushion plate, in the direction shown in Figure 107.
    Note: This dished cushion plate was not used in the K-2 clutch on all models. Probably added because of harsh upshift or downshift concerns.

Continued on Page 73

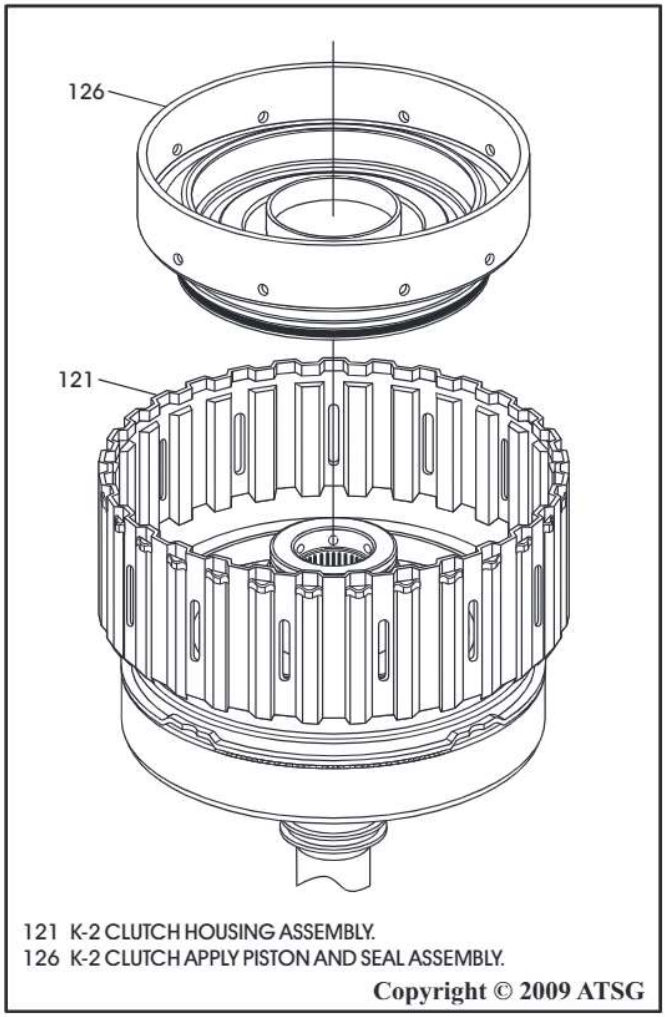

Figure 105

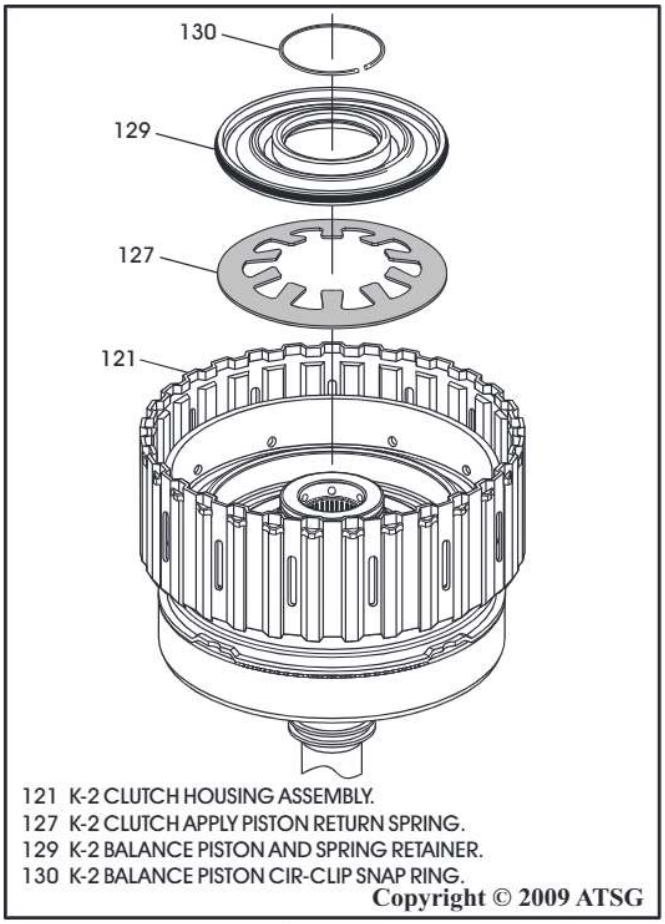

Figure 106

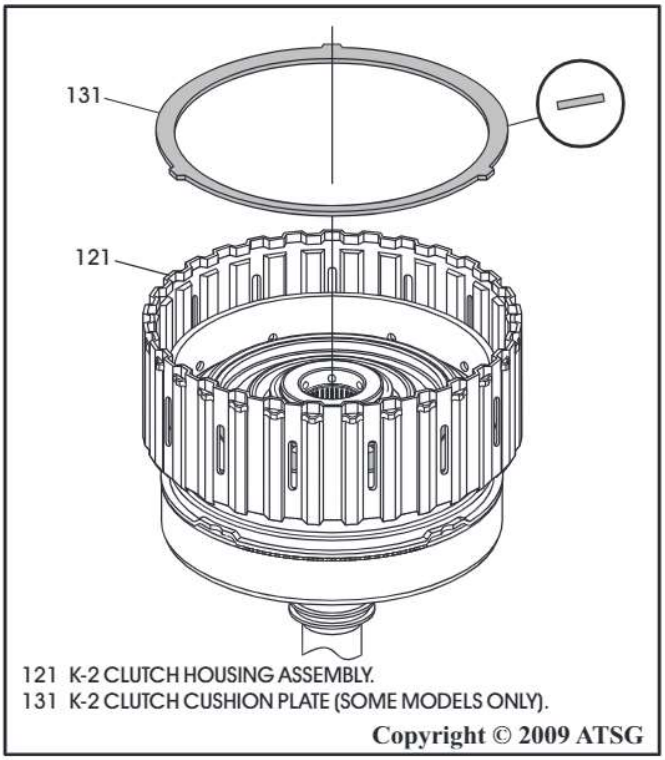

Figure 107

COMPONENT REBUILD (CONT'D)

K-2 Clutch Housing Assembly (Cont'd)

17. Use caution when installing K-2 clutch plates.
    Caution: The K-2 clutch may have 3, 4, 5, or 6 "double-sided" friction plates depending on the model. Refer to the chart in Figure 108 for reference. We have not found any of the "single-sided" frictions in the K-2 clutch. All friction plates should be soaked in proper fluid for 30 minutes before installation.
18. Install the K-2 clutch .071" thick apply plate, as shown in Figure 109.
19. Install "double-sided" clutches beginning with a friction plate and alternating with steel plates, as shown in Figure 109, until you have proper number of plates installed.
    Note: Steel plate thickness will vary depending on snap ring groove location and number of frictions required (See chart Figure 108).
20. Install the K-2 clutch backing plate, as shown in Figure 109.
21. Install the K-2 clutch *selective* snap ring, as shown in Figure 109.

Continued on Page 74

K-2 CLUTCH QUANTITY CHART BY MODEL

TRANSMISSION MODEL	LINED PLATE	STEEL PLATE	BACK. PLATE	THIN APPLY PLATE
722.600/660	4	3	1	1
722.601/602/603/610	3	2	1	1
722.604/606/609/617	4	3	1	1
722.605/607/608/611/614 618/662/664/699	4	3	1	1
722.665	4	3	1	1
722.620/621/624/626/627 628/630/633/636/666	6	5	1	1
722.622/623/625 631/632/663/669	5	4	1	1
722.629/634/661	5	4	1	1

The number of K-2 friction plates used is model dependant and determined by the backing plate snap ring location and the thickness of the steel plates.

Copyright © 2009 ATSG

Figure 108

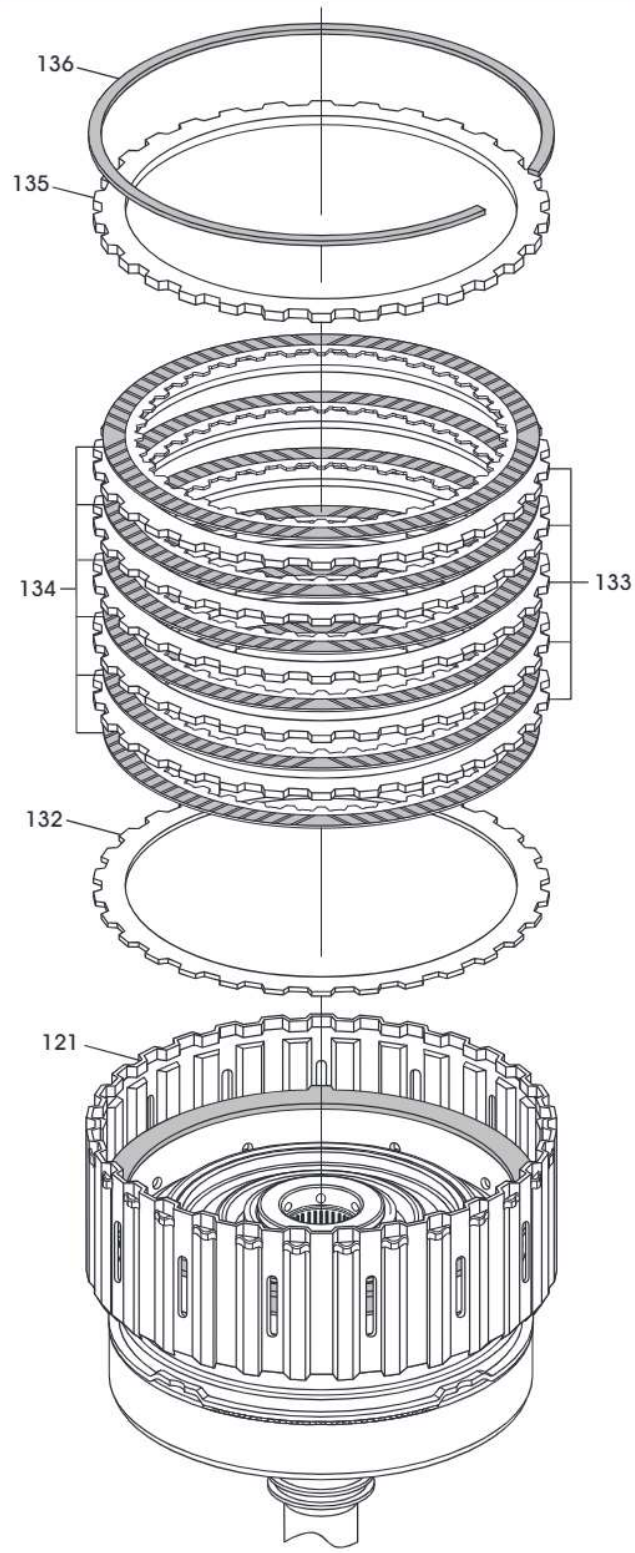

121 K-2 CLUTCH HOUSING ASSEMBLY.
132 K-2 CLUTCH APPLY PLATE, .071" THICK.
133 K-2 CLUTCH STEEL PLATES, .110" THICK (QTY VARIES).
134 K-2 CLUTCH FRICTION PLATES (QTY VARIES - SEE CHART).
135 K-2 CLUTCH BACKING PLATE, .138" THICK.
136 K-2 CLUTCH "SELECTIVE" SNAP RING.

Copyright © 2009 ATSG

Figure 109

COMPONENT REBUILD (CONT'D)

K-2 Clutch Housing Assembly (Cont'd)

22. Measure K-2 clutch clearance using a feeler gauge between the selective snap ring and the backing plate, as shown in Figure 110.
23. K-2 clutch clearance will depend on how many friction plates are used in the pack. The proper clearances for each are listed in Figure 110. ***Note: ATSG clutch clearances vary from the Mercedes specification, as Mercedes uses a rather costly tool to compress the cushion plate in the clutch pack.***
24. Change the selective snap ring as necessary to obtain the proper clutch clearance. There are 5 different snap ring thickness' available and are listed in Figure 110.
25. We have provided you with frequently used part numbers for the clutches in Figure 111. Keep in mind that part numbers can change without notice.

Continued on Page 75

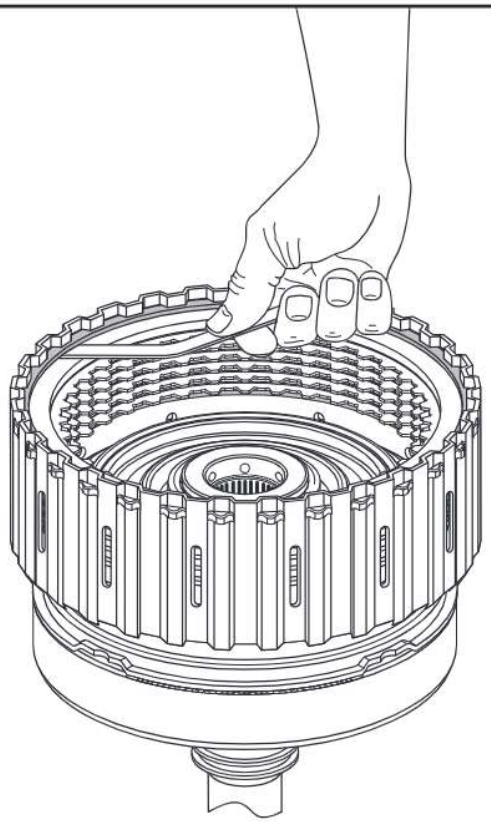

K-2 Clutch Clearance Should Be;

3 Frictions = 0.8 - 1.0mm (.031" - .040")
4 Frictions = 1.0 - 1.3mm (.040" - .051")
5 Frictions = 1.3 - 1.6mm (.051" - .062")
6 Frictions = 1.5 - 1.8mm (.059" - .070")

K-2 CLUTCH SELECTIVE SNAP RINGS

THICKNESS	PART NUMBER
2.2 MM (.086")	140 994 92 40
2.5 MM (.098")	140 994 93 40
2.8 MM (.110")	140 994 94 40
3.1 MM (.122")	140 994 32 35
3.4 MM (.134")	140 994 33 35

Copyright © 2009 ATSG

Figure 110

K-2 CLUTCH CUT-AWAY

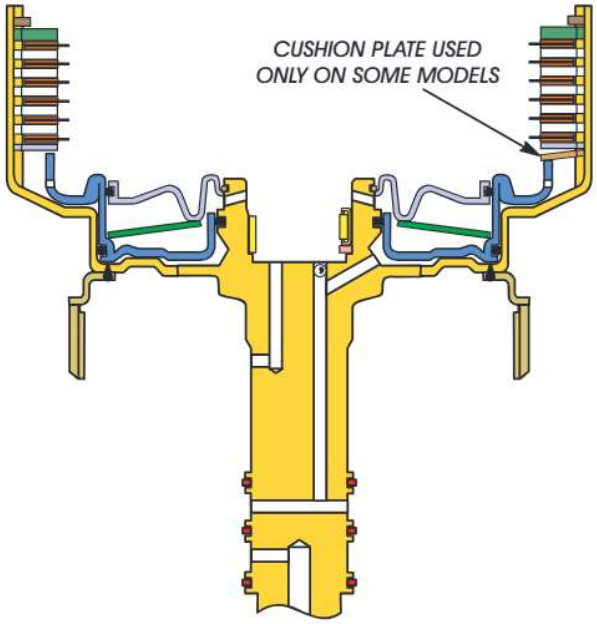

K-2 CLUTCH MOST FREQUENTLY USED PLATES

USAGE	THICKNESS	PART NUMBER
BACKING PLATE	3.98 MM (.157")	140 272 08 26
STEEL PLATE	3.5 MM (.138")	140 272 07 26
STEEL PLATE	2.8 MM (.110")	140 272 29 26
APPLY PLATE	1.8 MM (.071")	140 272 06 26
FRICTION PLATE	2.14 MM (.084")	140 272 01 25

Copyright © 2009 ATSG

Figure 111

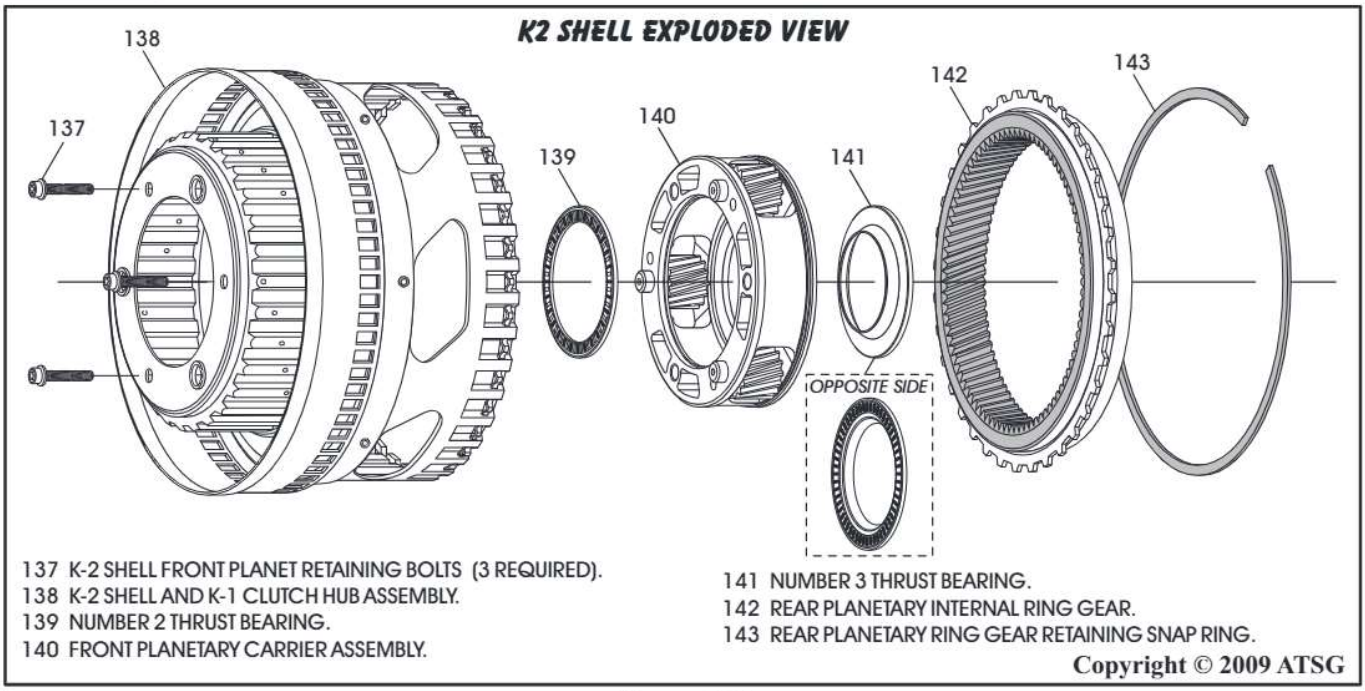

Figure 112

COMPONENT REBUILD (CONT'D)

K-2 Clutch Housing Assembly (Cont'd)

K-2 Clutch Shell & K-1 Hub Assembly

26. Disassemble the front planetary carrier from the K-2 shell by removing the bolts, as shown in Figure 112.
    Note: This should be done especially on units that have been through a planetary failure as it is a great gathering place for trash.
27. Clean all K-2 shell parts thoroughly and dry with compressed air.
28. Inspect all K-2 shell parts thoroughly for any wear and/or damage.
29. Install the front planetary carrier back into the K-2 shell, as shown in Figure 113.
30. Install the three retaining bolts, as shown in Figure 113.

Continued on Page 76

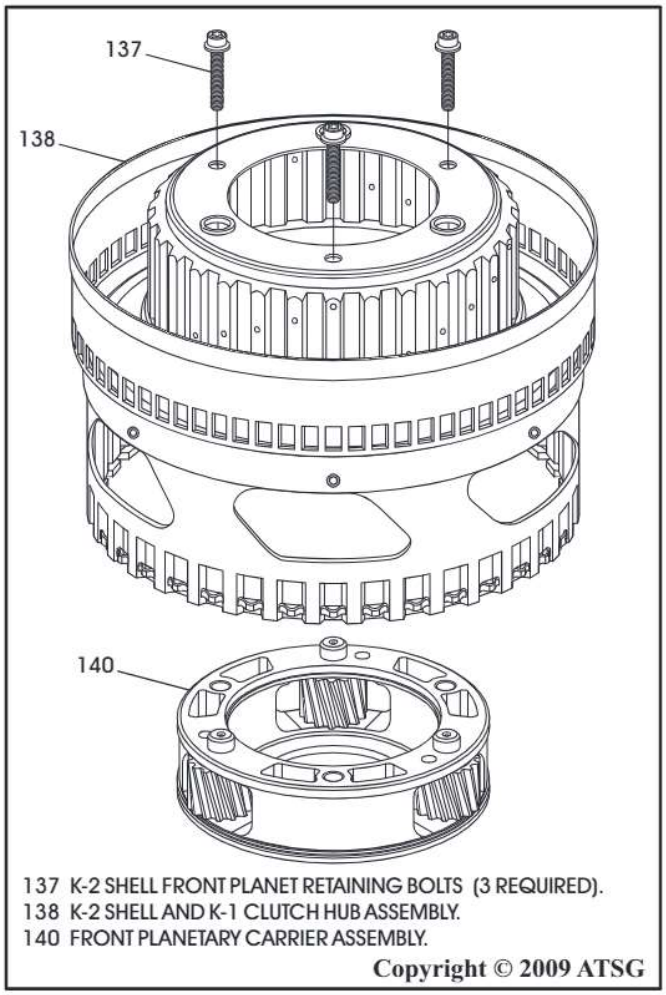

Figure 113

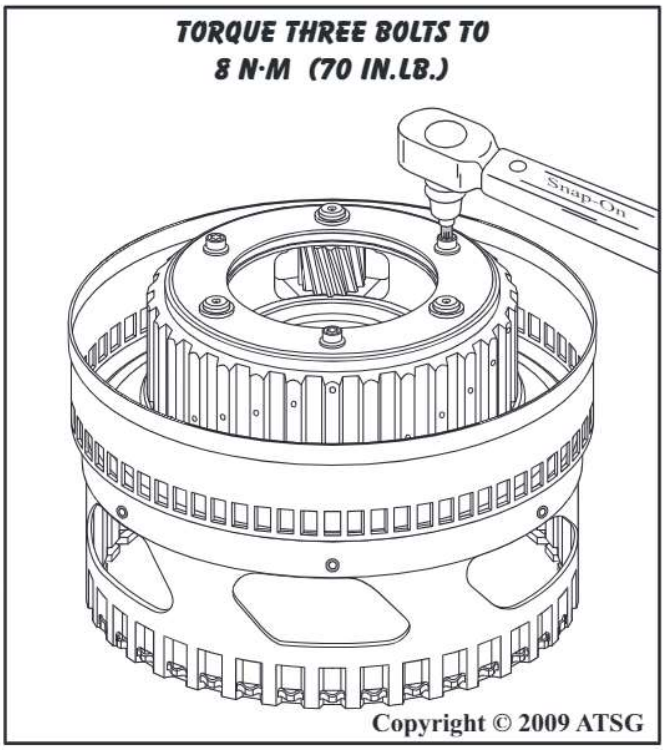

Figure 114

COMPONENT REBUILD (CONT'D)

K-2 Clutch Housing Assembly (Cont'd)
K-2 Clutch Shell & K-1 Hub Assembly

31. Torque front planetary carrier retaining bolts to 8 N·m (71 in.lb.), as shown in Figure 114.
32. Install the number 2 thrust bearing, as shown in Figure 115, and retain with a small amount of Trans-Jel®.
33. Turn the K-2 shell over and install the number 3 thrust bearing, as shown in Figure 116.
    Note: The tapered thrust bearing race faces down, as shown in Figure 116.

Continued on Page 77

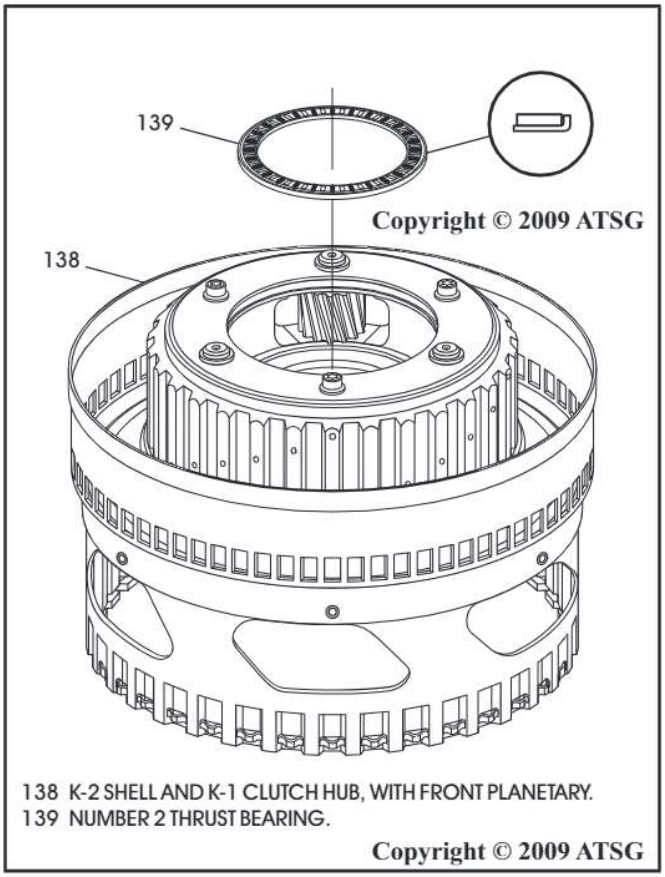

Figure 115

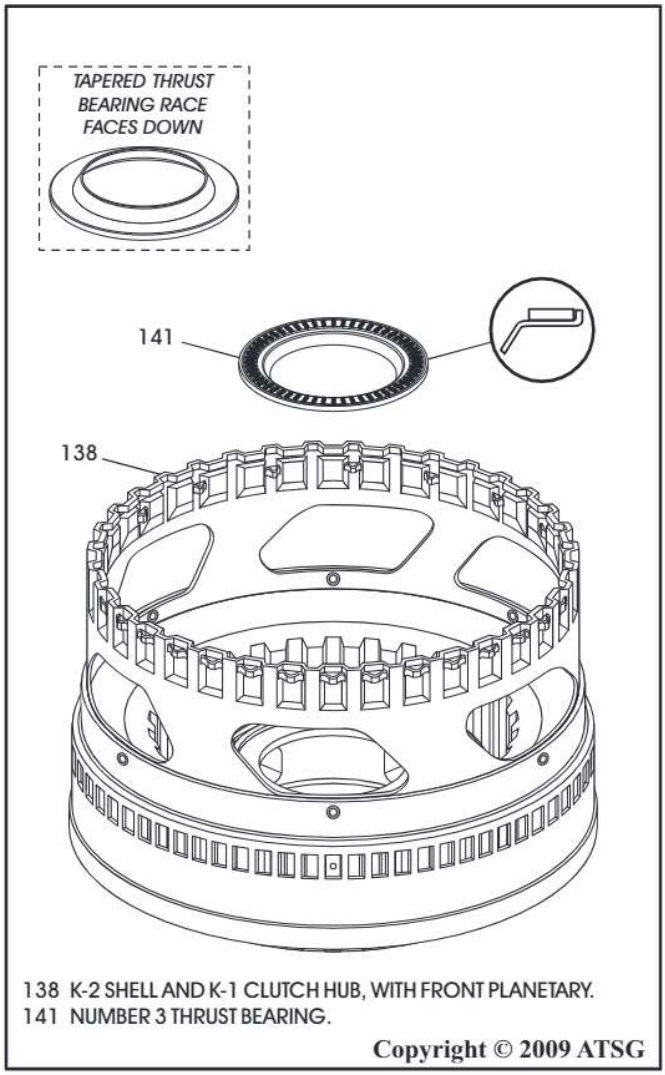

Figure 116

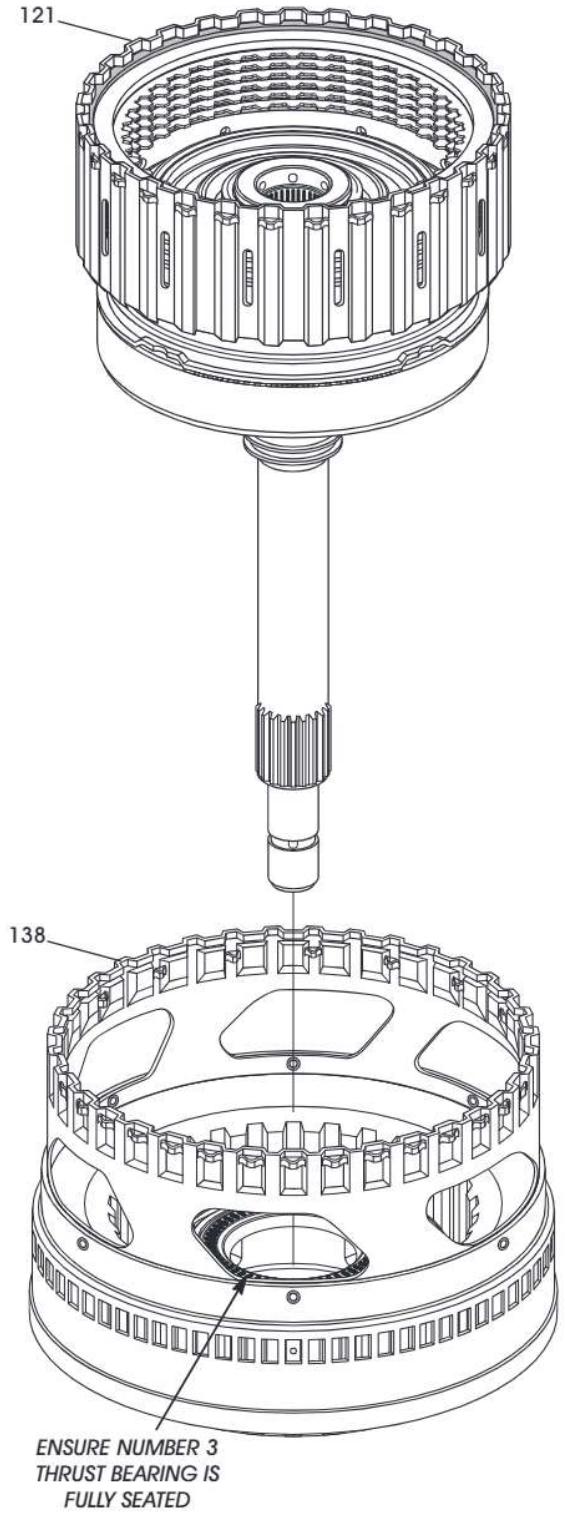

121 COMPLETED K-2 CLUTCH HOUSING ASSEMBLY.
138 K-2 SHELL AND K-1 CLUTCH HUB, WITH FRONT PLANETARY.

Copyright © 2009 ATSG

Figure 117

COMPONENT REBUILD (CONT'D)

K-2 Clutch Housing Assembly (Cont'd)

K-2 Clutch Shell & K-1 Hub Assembly

34. Install the completed K-2 clutch housing into K-2 shell assembly, as shown in Figure 117.
35. Install the rear planetary ring gear and snap ring, as shown in Figure 118.
36. Install the number 4 thrust bearing race onto K-2 clutch housing, as shown in Figure 118 and retain with small amount of Trans-Jel®.

Continued on Page 78

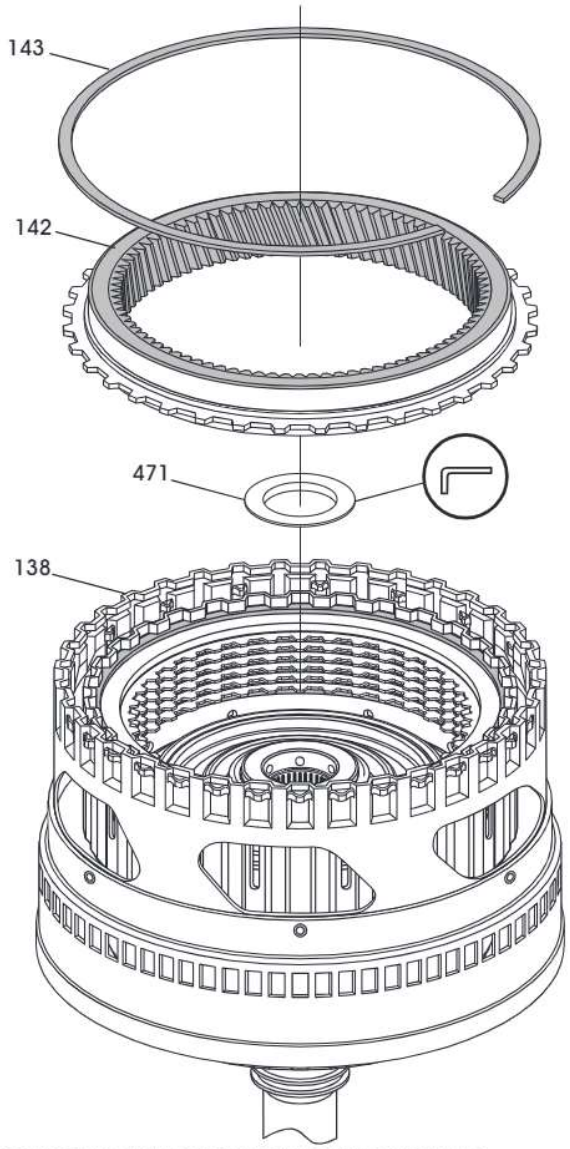

138 K-2 SHELL WITH K-2 CLUTCH HOUSING INSTALLED.
142 REAR PLANETARY INTERNAL RING GEAR.
143 REAR PLANETARY RING GEAR RETAINING SNAP RING.
471 NUMBER 4 THRUST BEARING RACE.

Copyright © 2009 ATSG

Figure 118

COMPONENT REBUILD (CONT'D)

K-2 Clutch Housing Assembly (Cont'd)

K-2 Clutch Shell & K-1 Hub Assembly

37. Ensure that the snap ring is fully seated, as shown in Figure 119.
38. Install three new "updated" turbine shaft seal rings into the turbine shaft grooves, as shown in Figure 120.
39. Set completed K-2 clutch housing assembly aside for the final assembly process.

Component Rebuild
Continued on Page 79

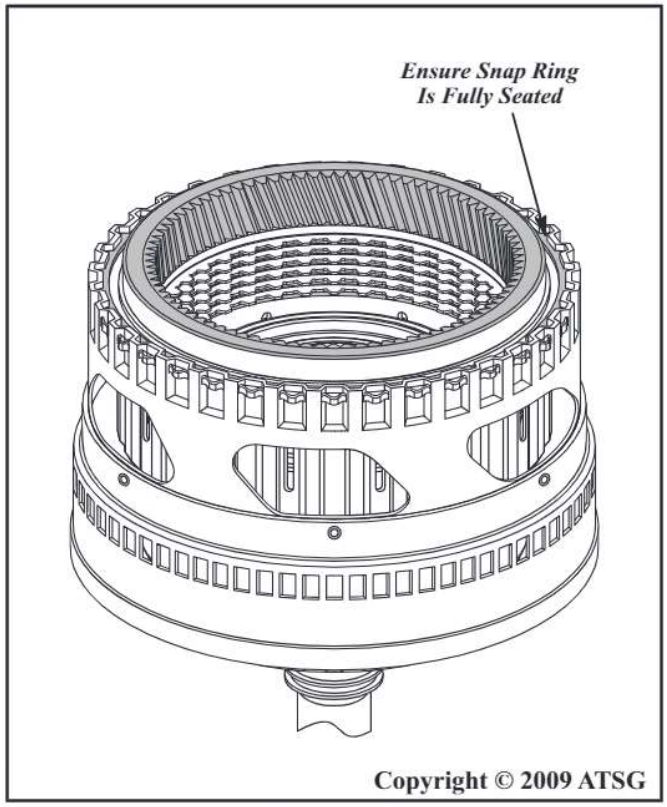

Figure 119

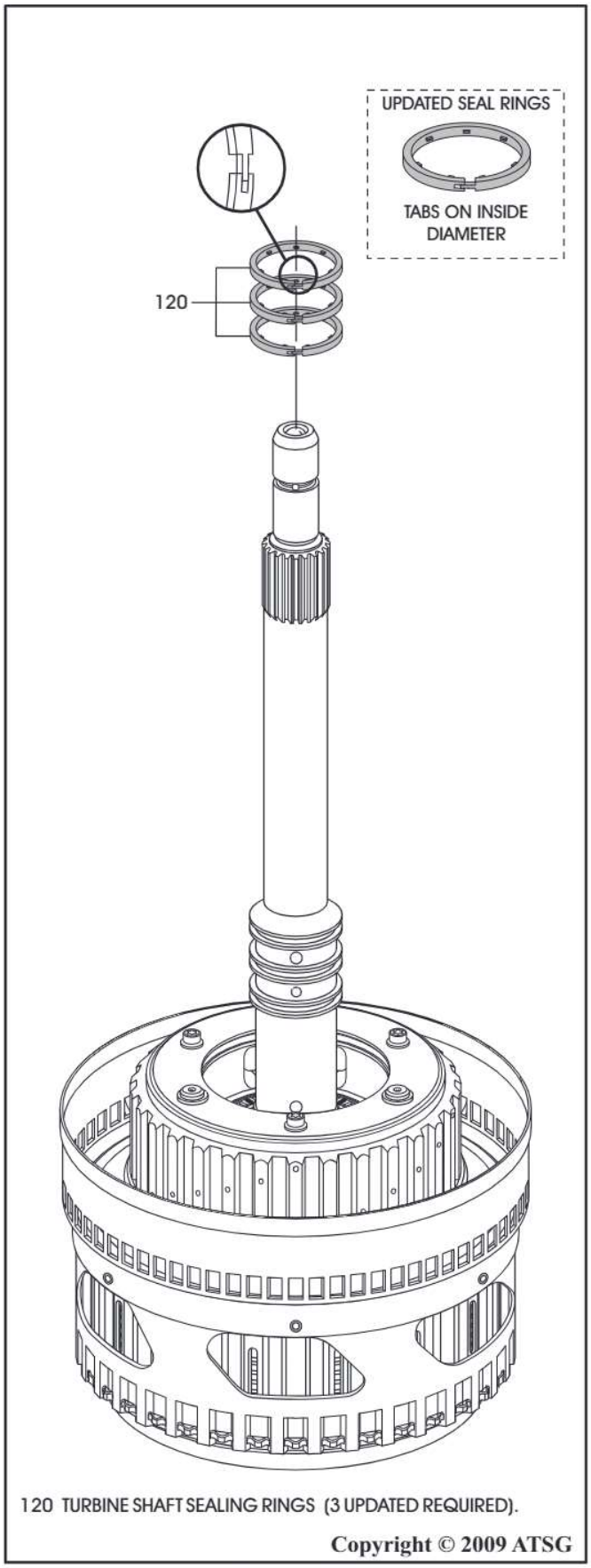

Figure 120

COMPONENT REBUILD (CONT'D)

Geartrain Identification And Tooth Count

Great care ***must*** be exercised if replacement parts are needed for any of the planetary gearsets in any of the vehicles equipped with a 722.6 transmission.

All of the 722.6 transmissions use three different planetary gearsets and are identified as the Front Planetary System, Center Planetary System, and Rear Planetary System. There are two different ratios available in North America and obviously, will not interchange.

There are a wide variety of tooth counts possible for all three of the planetary gearsets and in addition you may have 3 or 4 pinion carriers, depending on engine size.

This is because of the wide variety of vehicle usage from small cars to large trucks; wide variety of engine sizes 4 Cyl, 6 Cyl, 8 Cyl, and 12 Cyl, and covers eleven different Litre sizes, and also Gas or Diesel.

Refer to Figure 121 and 122 for identification of the individual gearsets and the possible tooth counts for each of them.

To order ***any*** replacement parts from the dealer, the VIN will be ***required.*** Be prepared.

Continued on Page 80

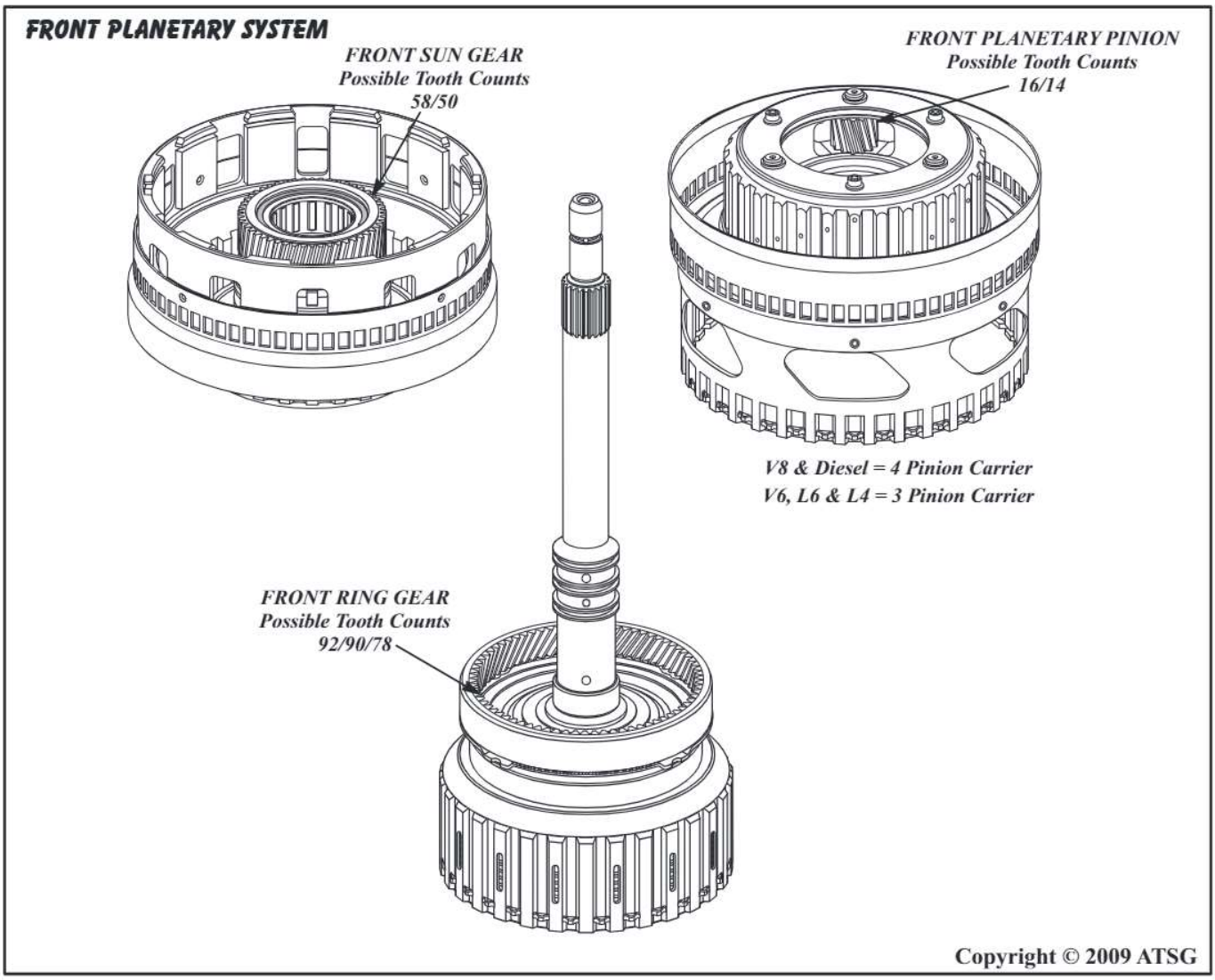

Figure 121

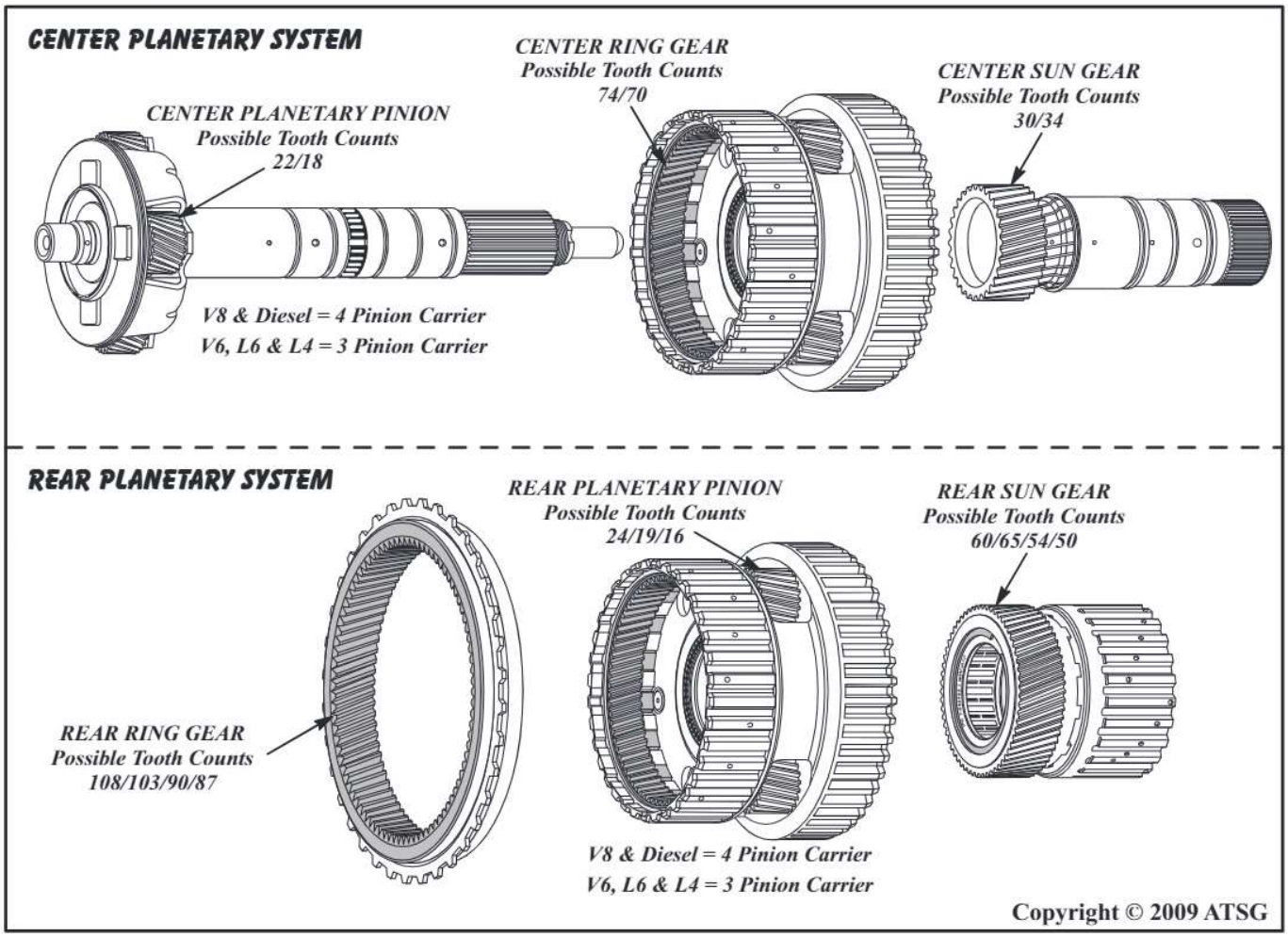

Figure 122

A VERY LARGE "THANK YOU" TO

Rich & Linda Varjan

Owners Of

EUROPEAN EXCHANGE, INC

Specializing in Tramsmissions for Fine Imported Automobiles

240 Lodi Street - Hackensack, NJ 07601
(201) 489-7770

FOR PROVIDING US WITH THE TRANSMISSION THAT MADE THIS MANUAL POSSIBLE

Component Rebuild
Continued on Page 81

CENTER AND REAR PLANETARY GEARSET, EXPLODED VIEW

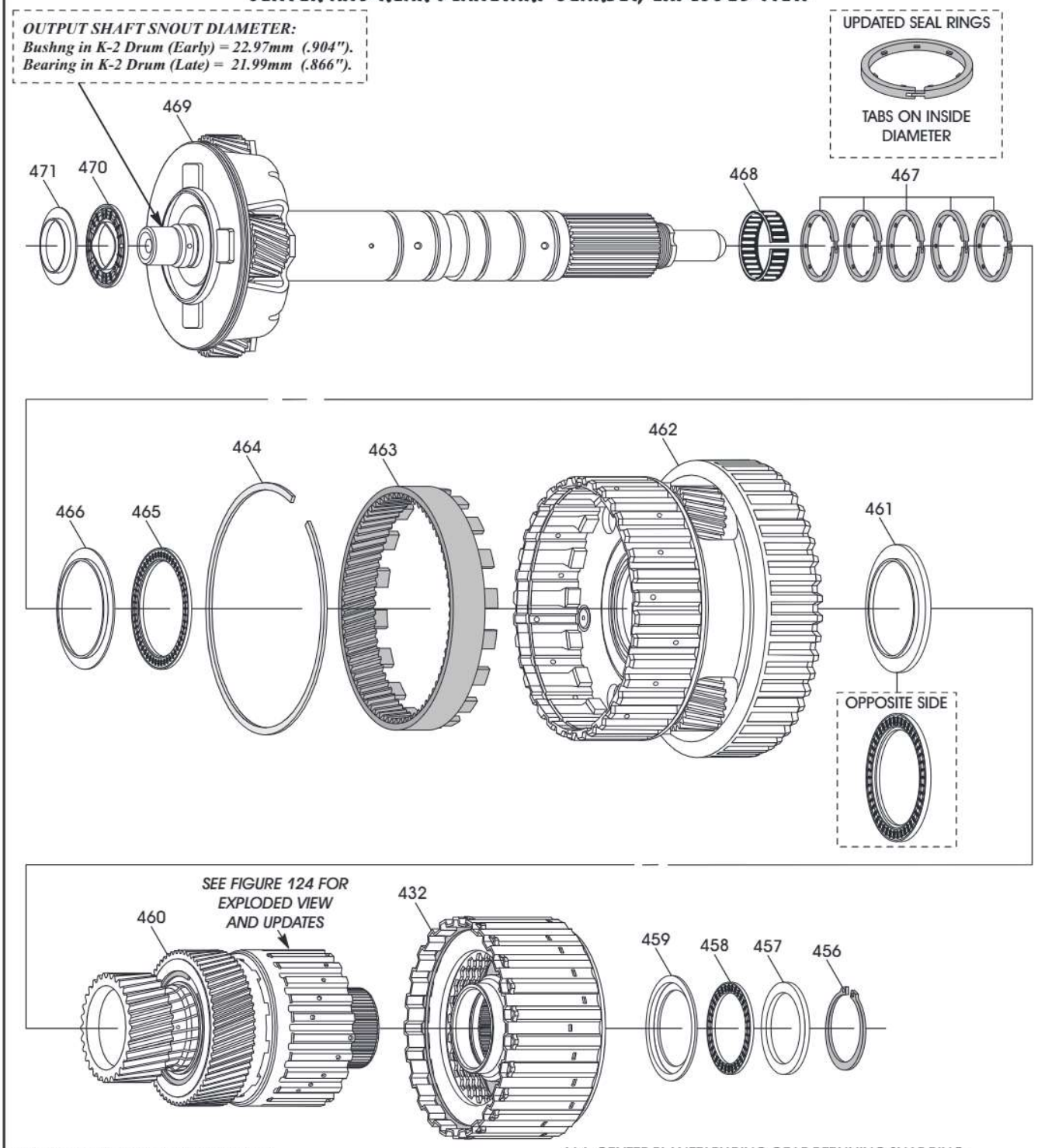

432 K-3 CLUTCH HOUSING ASSEMBLY.
456 F-2 SPRAG AND SUN GEAR SHAFT RETAINING SNAP RING.
457 NUMBER 13 THRUST BEARING RACE.
458 NUMBER 12 THRUST BEARING.
459 NUMBER 11 THRUST BEARING RACE.
460 F-2 SPRAG AND SUN GEAR SHAFT ASSEMBLY.
461 NUMBER 8 THRUST BEARING.
462 REAR PLANETARY CARRIER AND CLUTCH HUB ASSEMBLY.
463 CENTER PLANETARY RING GEAR.
464 CENTER PLANETARY RING GEAR RETAINING SNAP RING.
465 NUMBER 7 THRUST BEARING.
466 NUMBER 6 THRUST BEARING RACE.
467 OUTPUT SHAFT SEALING RINGS (5 REQUIRED).
468 OUTPUT SHAFT/SUN GEAR SHAFT CAGED NEEDLE BEARING.
469 CENTER PLANETARY CARRIER AND OUTPUT SHAFT.
470 NUMBER 5 THRUST BEARING.
471 NUMBER 4 THRUST BEARING RACE.

Copyright © 2009 ATSG

Figure 123

COMPONENT REBUILD (CONT'D)

Center & Rear Planetary Gearset

1. Removing the snap ring (456) from the output shaft, as shown in Figure 123, will allow you to disassemble the geartrain using Figure 123 as a guide.
2. The rear sun gear changed with the bushing being replaced with a ball bearing, as shown in Figure 124.
3. This allowed the elimination of the number 9 thrust bearing and number 10 thrust bearing race, as shown in Figure 124.
4. We will cover the assembly process for both the early and late versions.

Continued on Page 83

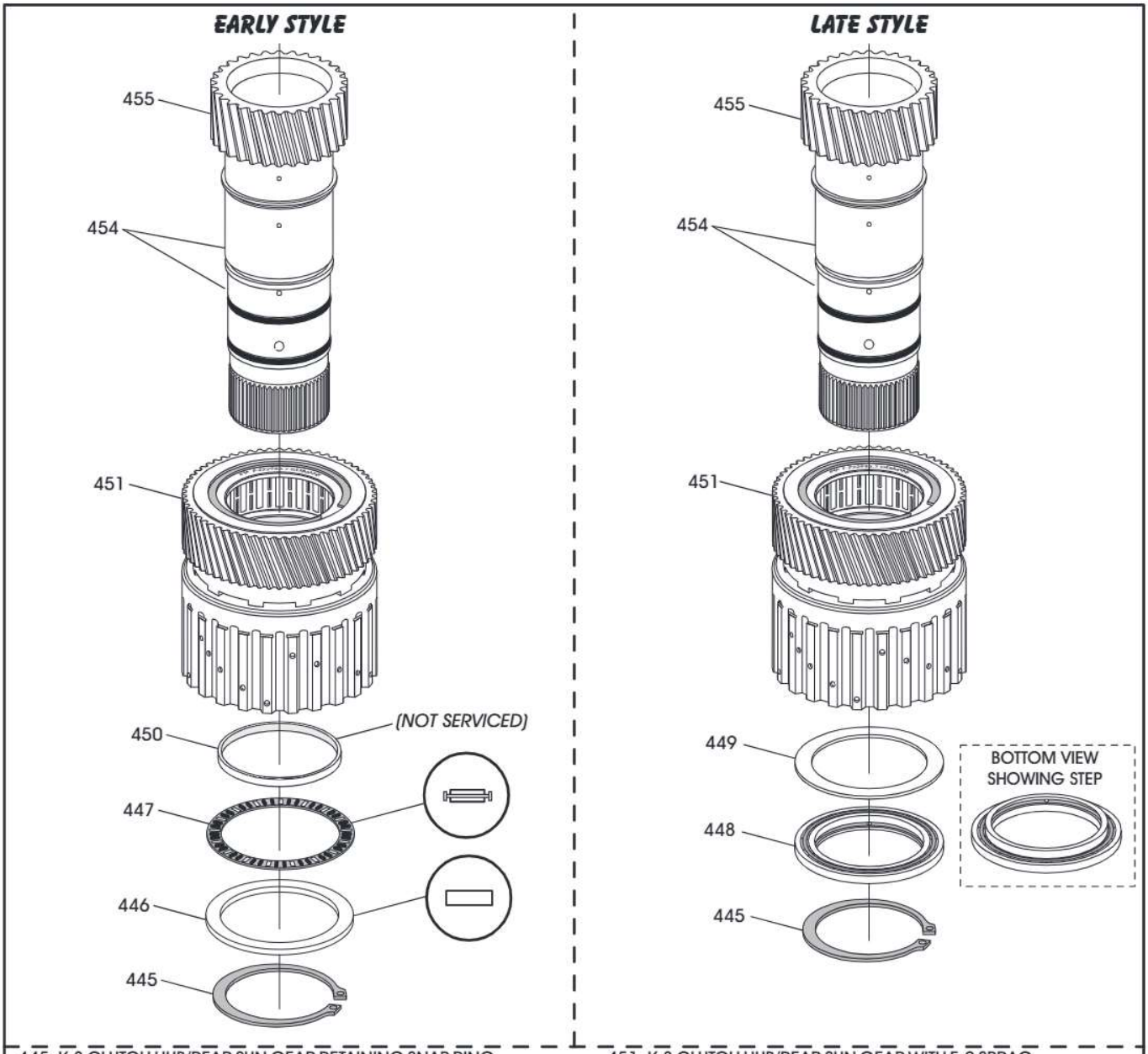

445 K-3 CLUTCH HUB/REAR SUN GEAR RETAINING SNAP RING.
446 NUMBER 10 THRUST BEARING RACE.
447 NUMBER 9 THRUST BEARING.
448 ADDED BALL BEARING (LATE STYLE ONLY).
449 ADDED BALL BEARING SPACER (LATE STYLE ONLY).
450 K-3 CLUTCH HUB/SUN GEAR BUSHING (NOT SERVICED).
451 K-3 CLUTCH HUB/REAR SUN GEAR WITH F-2 SPRAG.
452 F-2 SPRAG ASSEMBLY.
453 F-2 SPRAG ASSEMBLY RETAINING SNAP RING.
454 K-3 CLUTCH INNER "O" RING SEALS (2 REQUIRED).
455 CENTER SUN GEAR AND SHAFT ASSEMBLY.

Copyright © 2009 ATSG

Figure 124

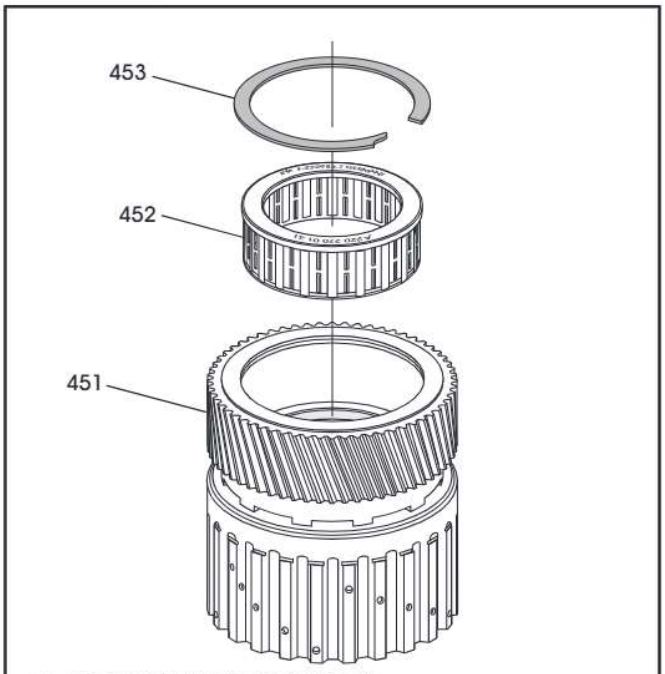

451 K-3 CLUTCH HUB/REAR SUN GEAR.
452 F-2 SPRAG ASSEMBLY.
453 F-2 SPRAG ASSEMBLY RETAINING SNAP RING.

Copyright © 2009 ATSG

Figure 125

COMPONENT REBUILD (CONT'D)

Center & Rear Planetary Gearset (Cont'd)
F-2 Sprag & Sun Gear Shaft (Cont'd)

5. The F-2 sprag was upgraded from 14 elements to 20 elements and the Mercedes part number is 220 270 01 31. The F-2 sprag uses 1 brass end bearing that is integral to the cage and uses only one snap ring, as shown in Figure 125. The 14 element sprag is known to slip, which create gear ratio error codes.
   Note: Do Not use 14 element sprag.
6. Install new 20 element F-2 sprag into the rear sun gear, as shown in Figure 125.
   Note: The elements fall out of the cage very easily. This does not mean that the sprag is defective. Insert the elements back into the cage, as shown in Figure 126.
7. If you have the late ball bearing style, install spacer and ball bearing with the step facing up, as shown in Figure 127.
   Note: The ball bearing is pressed into the rear sun gear.

Continued on Page 84

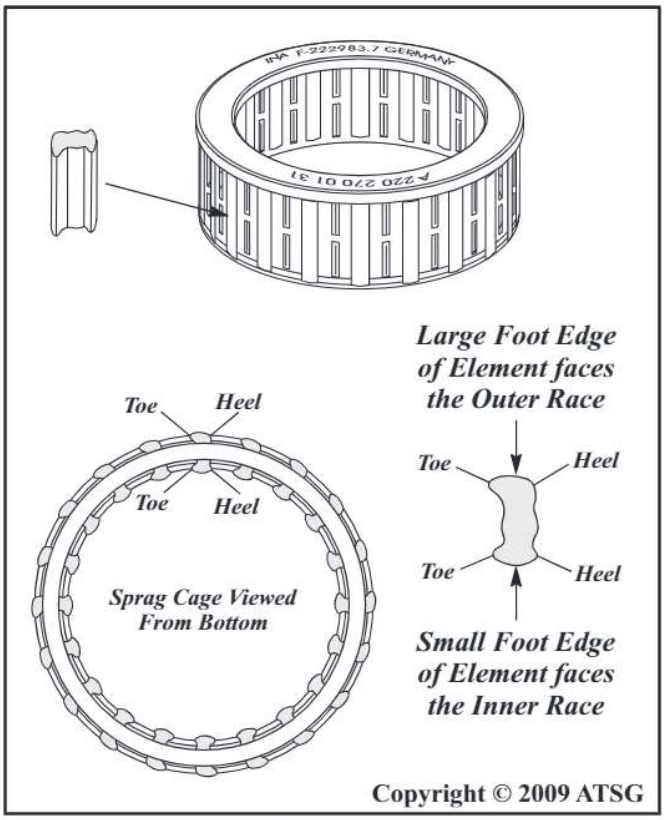

Copyright © 2009 ATSG

Figure 126

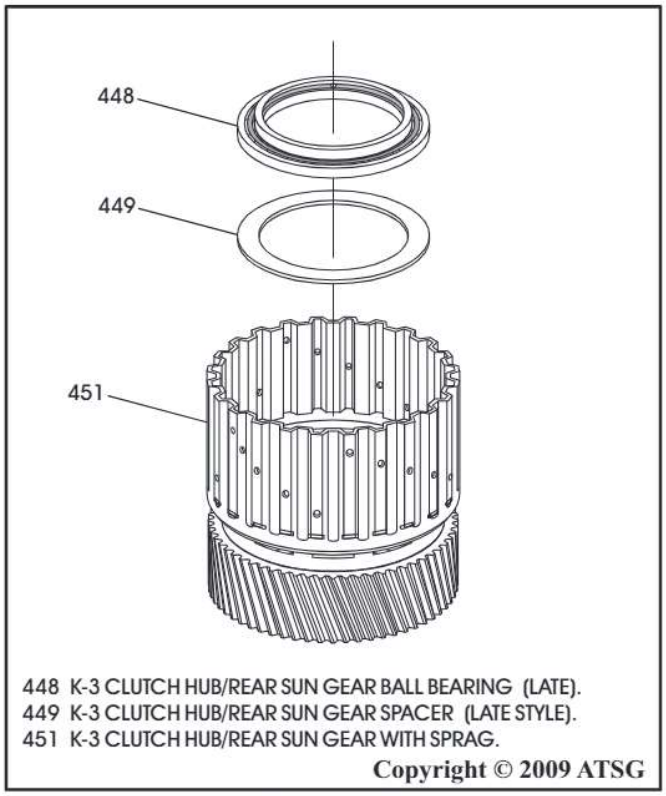

448 K-3 CLUTCH HUB/REAR SUN GEAR BALL BEARING (LATE).
449 K-3 CLUTCH HUB/REAR SUN GEAR SPACER (LATE STYLE).
451 K-3 CLUTCH HUB/REAR SUN GEAR WITH SPRAG.

Copyright © 2009 ATSG

Figure 127

COMPONENT REBUILD (CONT'D)

Center & Rear Planetary Gearset (Cont'd)
F-2 Sprag & Sun Gear Shaft (Cont'd)

8. Install two new K-3 clutch "O" ring seals into the grooves in the center sun gear and shaft, as shown in Figure 128, and lube with a small amount of Trans-Jel®.
9. Install the K-3 clutch hub/rear sun gear onto sun gear shaft using counter-clockwise motion, as shown in Figure 129.
10. Check for proper sprag rotation, as shown in Figure 130.
11. If you have the late ball bearing style, simply install the snap ring, as shown in Figure 129.

Continued on Page 85

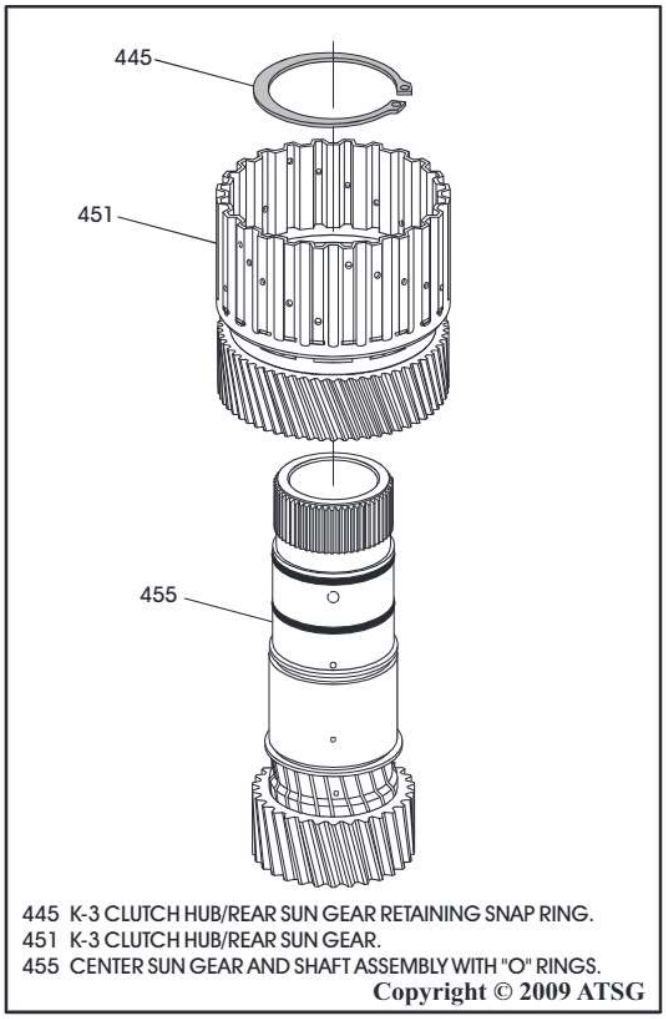

445 K-3 CLUTCH HUB/REAR SUN GEAR RETAINING SNAP RING.
451 K-3 CLUTCH HUB/REAR SUN GEAR.
455 CENTER SUN GEAR AND SHAFT ASSEMBLY WITH "O" RINGS.

Copyright © 2009 ATSG

Figure 129

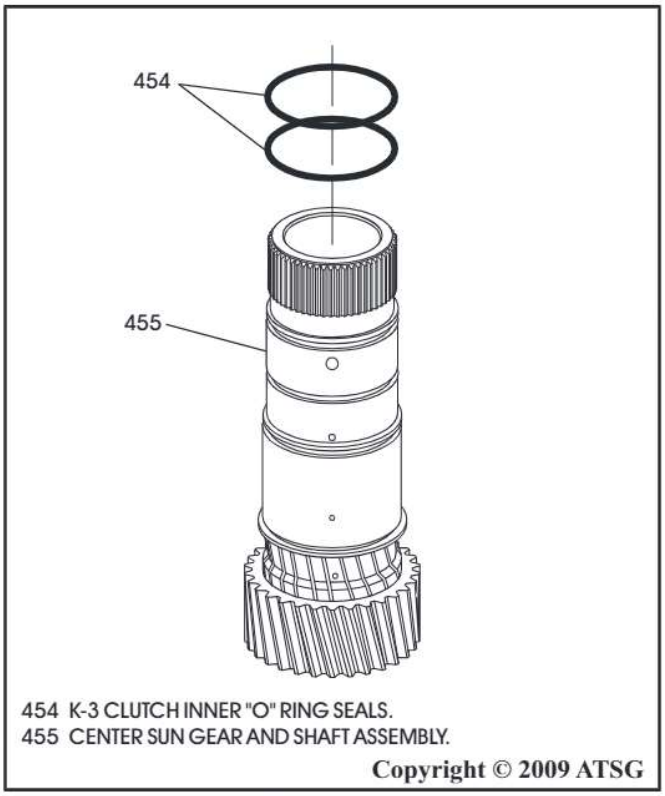

454 K-3 CLUTCH INNER "O" RING SEALS.
455 CENTER SUN GEAR AND SHAFT ASSEMBLY.

Copyright © 2009 ATSG

Figure 128

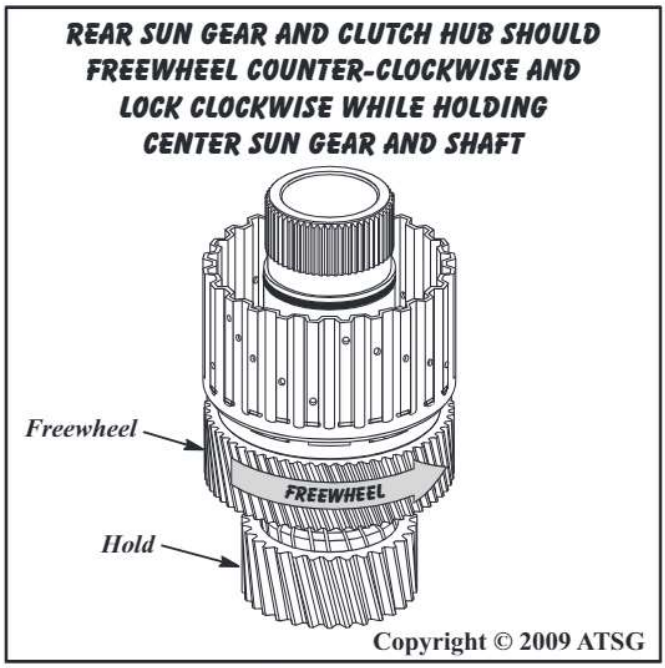

Copyright © 2009 ATSG

Figure 130

COMPONENT REBUILD (CONT'D)

Center & Rear Planetary Gearset (Cont'd)

F-2 Sprag & Sun Gear Shaft (Cont'd)

12. If you have the early bushing style, install the No. 9 thrust bearing, as shown in Figure 131.
13. Install the No. 10 thrust bearing race, as shown in Figure 131.
14. Install K-3 clutch hub/ rear sun gear retaining snap ring, as shown in Figure 131.
15. Set the F-2 sprag and sun gear shaft assembly aside for gearset assembly process.

Continued on Page 86

A VERY LARGE "THANK YOU" TO

Rich & Linda Varjan

Owners Of

EUROPEAN EXCHANGE, INC

Specializing in Transmissions for Fine Imported Automobiles

240 Lodi Street - Hackensack, NJ 07601
(201) 489-7770

FOR PROVIDING US WITH THE TRANSMISSION THAT MADE THIS MANUAL POSSIBLE

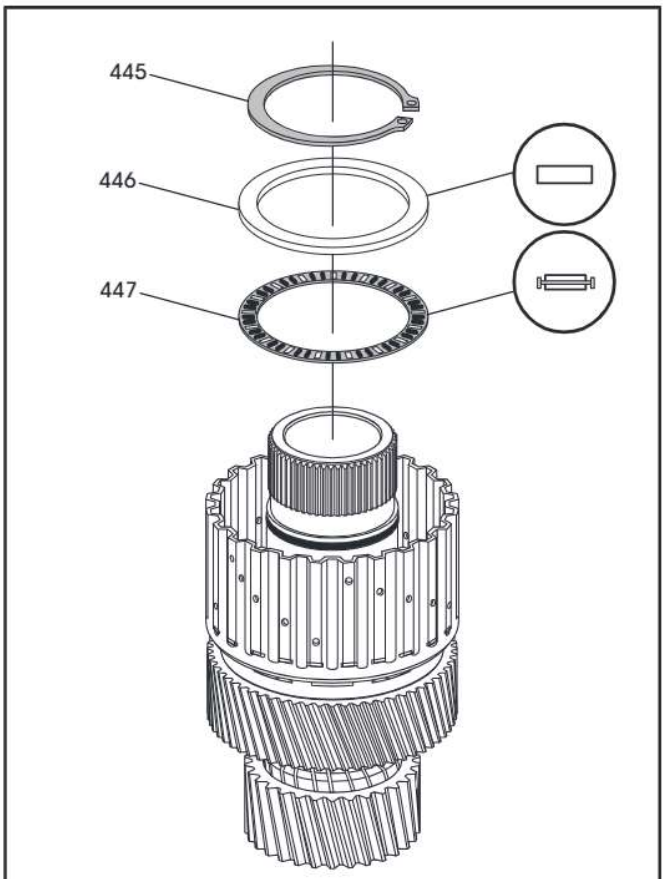

445 K-3 CLUTCH HUB/REAR SUN GEAR RETAINING SNAP RING.
446 NUMBER 10 THRUST BEARING RACE.
447 NUMBER 9 THRUST BEARING.

Copyright © 2009 ATSG

Figure 131

Copyright © 2009 ATSG

COMPONENT REBUILD (CONT'D)

Center & Rear Planetary Gearset (Cont'd)

K-3 Clutch Housing Assembly

16. The K-3 clutch housing is also a component of the center and rear planetary gearset, as shown in Figure 123.
17. Disassemble the K-3 clutch housing assembly, using Figure 132 as a guide.
18. Clean all K-3 clutch housing parts thoroughly and dry with compressed air.
19. Inspect all K-3 clutch housing parts thoroughly for any wear and/or damage.

Continued on Page 87

K-3 CLUTCH AND RELATED PARTS, EXPLODED VIEW

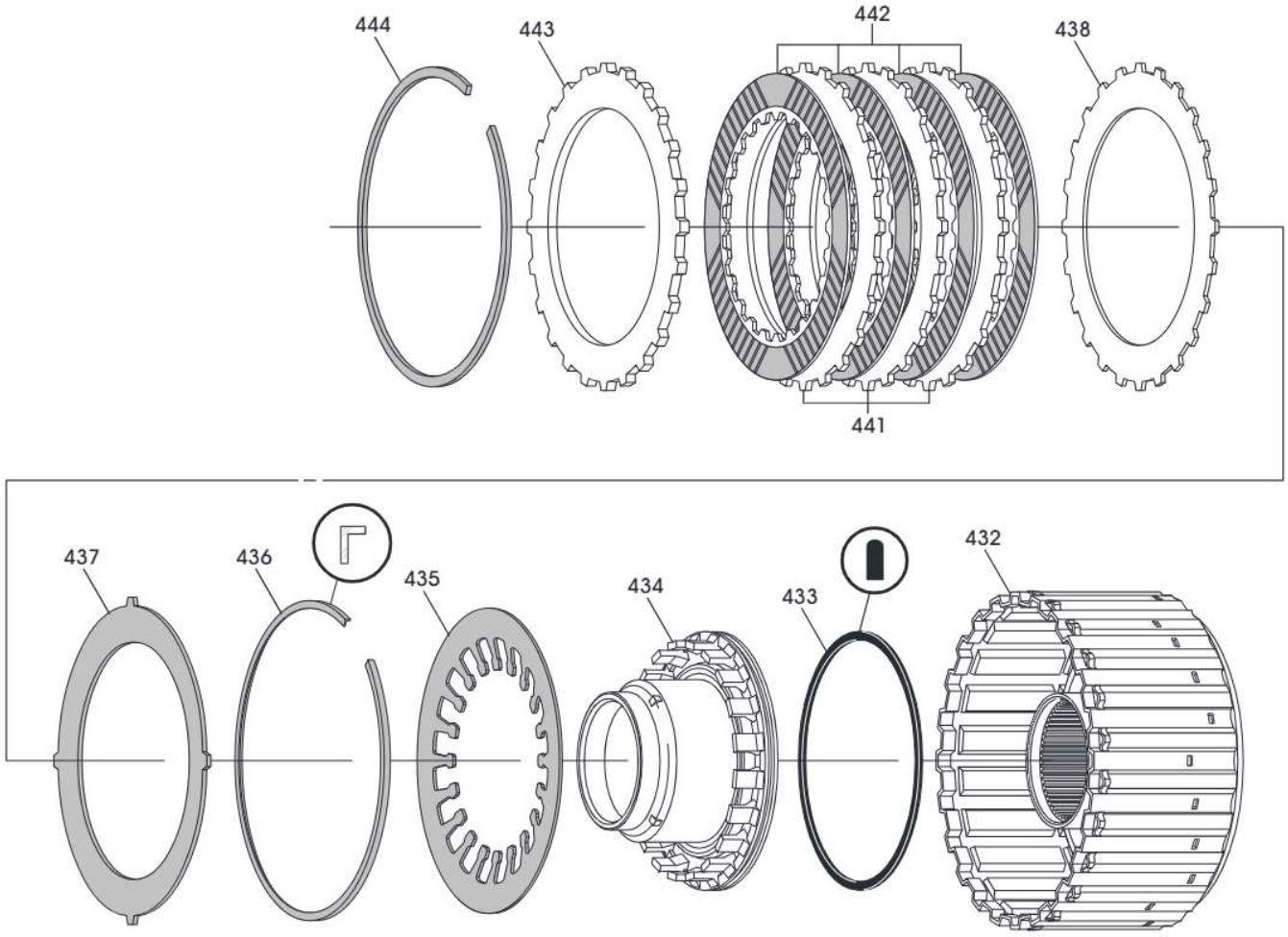

432 K-3 CLUTCH HOUSING ASSEMBLY.
433 K-3 CLUTCH APPLY PISTON OUTER "D" RING SEAL.
434 K-3 CLUTCH APPLY PISTON.
435 K-3 CLUTCH APPLY PISTON RETURN SPRING.
436 K-3 APPLY PISTON RETURN SPRING "L" SHAPED SNAP RING.
437 K-3 CLUTCH CUSHION SPRING.
438 K-3 CLUTCH APPLY PLATE (.071").
441 K-3 CLUTCH STEEL PLATES (109"), QUANTITY VARIES.
442 K-3 CLUTCH FRICTION PLATES, QUANTITY VARIES.
443 K-3 CLUTCH BACKING PLATE (.157").
444 K-3 CLUTCH "*SELECTIVE*" SNAP RING.

Copyright © 2009 ATSG

Figure 132

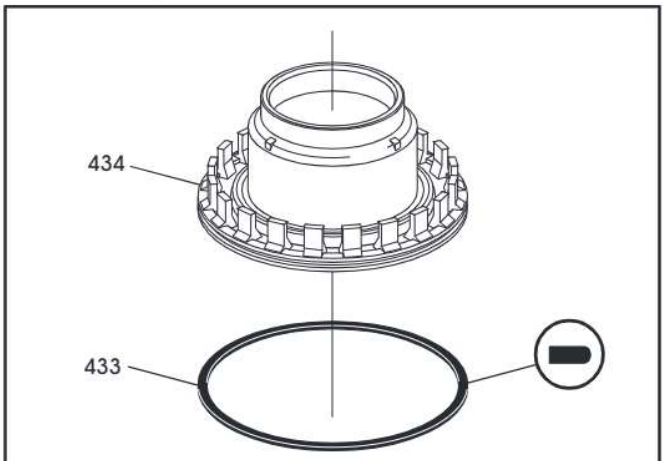

433 K-3 CLUTCH APPLY PISTON OUTER "D" RING SEAL.
434 K-3 CLUTCH APPLY PISTON.

Copyright © 2009 ATSG

Figure 133

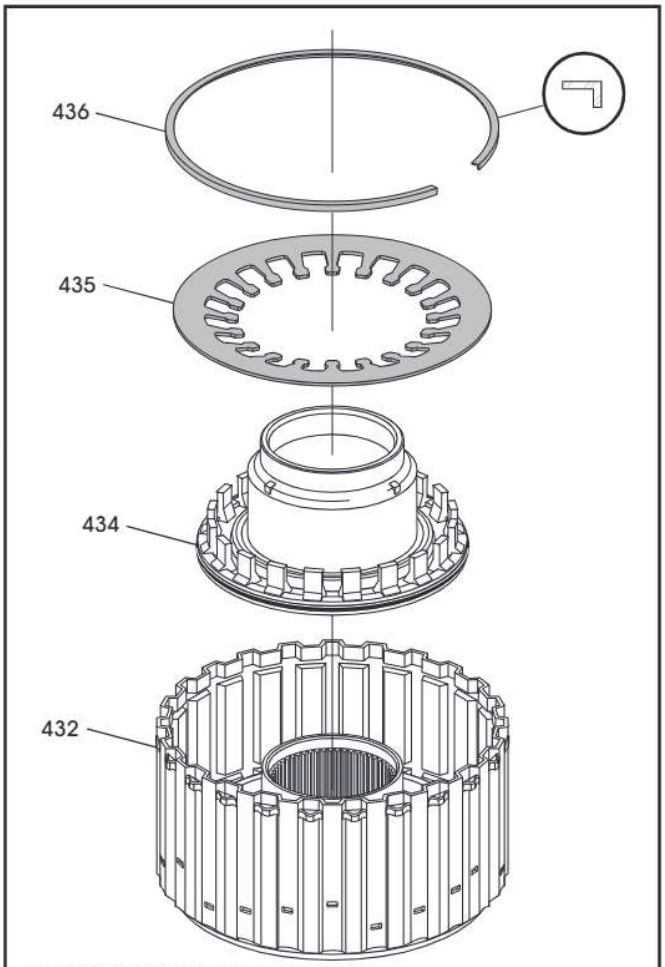

432 K-3 CLUTCH HOUSING ASSEMBLY.
434 K-3 CLUTCH APPLY PISTON.
435 K-3 CLUTCH APPLY PISTON RETURN SPRING.
436 K-3 APPLY PISTON RETURN SPRING "L" SHAPED SNAP RING.

Copyright © 2009 ATSG

Figure 133

COMPONENT REBUILD (CONT'D)

Center & Rear Planetary Gearset (Cont'd)
K-3 Clutch Housing Assembly (Cont'd)

20. Install new "D" ring seal into the groove on the K-3 clutch piston, as shown in Figure 133, and lube with small amount of Trans-Jel®.
21. Install the completed K-3 clutch apply piston into the housing, as shown in Figure 134.
22. Install the return spring on top of apply piston, as shown in Figure 134.
23. Install the "L" shaped snap ring by pressing into position until you hear it snap.
    Note: Snap ring is "L" shaped to keep return spring centered on piston.
24. Use caution when installing K-3 clutch plates.
    Caution: The K-3 clutch may have 3, 4, or 5 "double-sided" friction plates depending on the model. Refer to the chart in Figure 134 for reference.
    Later models may also use the "single-sided" friction plates. We will cover the assembly process for both.
    All friction plates should be soaked in proper fluid for 30 minutes before installation.

Continued on Page 88

K-3 DOUBLE-SIDED CLUTCH QUANTITY CHART

TRANSMISSION MODEL	LINED PLATE	STEEL PLATE	BACK. PLATE	THIN APPLY PLATE
722.600/660	3	2	1	1
722.601/602/603/610	3	2	1	1
722.604/606/609/617	4	3	1	1
722.605/607/608/611/614 618/662/664/699	4	3	1	1
722.665	4	3	1	1
722.620/621/624/626/627 628/630/633/636/666	5	4	1	1
722.622/623/625 631/632/663/669	4	3	1	1
722.629/634/661	4	3	1	1

The number of K-3 friction plates used is model dependant and determined by the backing plate snap ring location and the thickness of the steel plates.

Copyright © 2009 ATSG

Figure 134

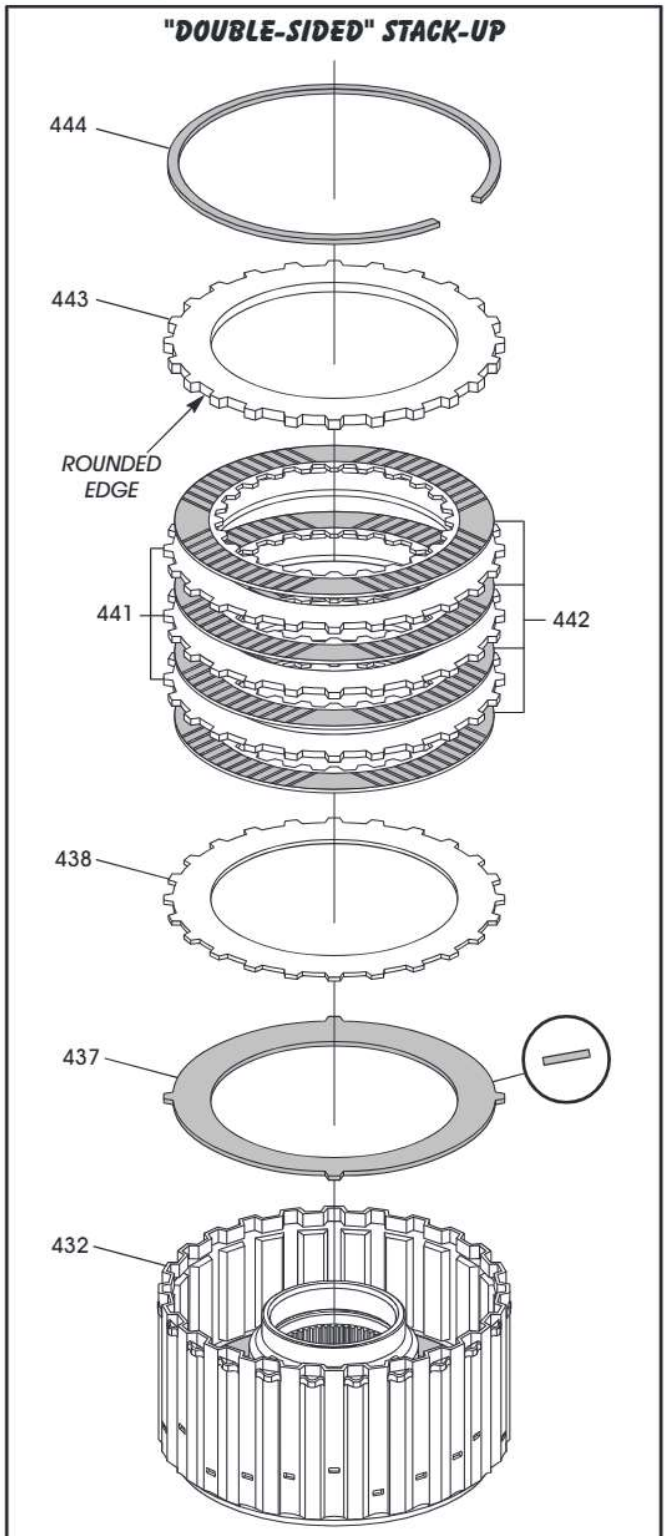

432 K-3 CLUTCH HOUSING ASSEMBLY.
437 K-3 CLUTCH DISHED CUSHION PLATE.
438 K-3 CLUTCH APPLY PLATE (.071").
441 K-3 CLUTCH STEEL PLATES (109"), QUANTITY VARIES.
442 K-3 CLUTCH FRICTION PLATES, QUANTITY VARIES.
443 K-3 CLUTCH BACKING PLATE (.157").
444 K-3 CLUTCH "*SELECTIVE*" SNAP RING.

Copyright © 2009 ATSG

Figure 135

K-3 Clutch Housing Assembly (Cont'd)
"Double-Sided" Clutch Plates

25. Install the K-3 clutch dished cushion plate in the direction shown in Figure 135.
26. Install the K-3 clutch .071" thick apply plate, as shown in Figure 135.
27. Install "double-sided clutches beginning with a friction plate and alternating with steel plates, as shown in Figure 135, until you have proper number of plates installed.
    Note: Steel plate thickness will vary depending on snap ring groove location and number of frictions required (See chart in Figure 136).
28. Install the K-3 clutch backing plate, as shown in Figure 135, with rounded edge down.
29. Install the K-3 clutch *selective* snap ring, as shown in Figure 135.

Continued on Page 89

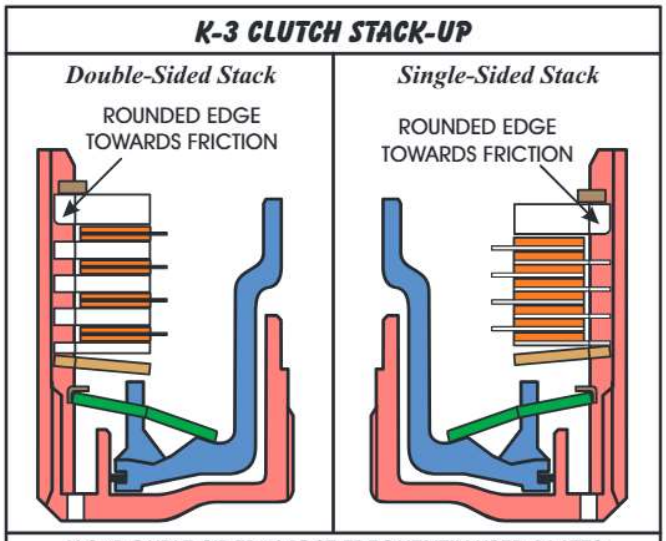

K-3 "DOUBLE-SIDED" MOST FREQUENTLY USED PLATES

USAGE	THICKNESS	PART NUMBER
BACKING PLATE	3.98 MM (.157")	140 272 12 26
STEEL PLATE	3.5 MM (.138")	140 272 11 26
STEEL PLATE	2.78 MM (.109")	140 272 27 26
APPLY PLATE	1.8 MM (.071")	140 272 10 26
FRICTION PLATE	1.6 MM (.064")	140 272 02 25
FRICTION PLATE	2.16 MM (.085")	140 272 07 25

K-3 "SINGLE-SIDED" MOST FREQUENTLY USED PLATES

USAGE	THICKNESS	PART NUMBER
BACKING PLATE	3.98 MM (.157")	140 272 12 26
FRICTION (INT-24 SPLINE)	2.13 MM (.084")	52108528AA
FRICTION (EXT-24 SPLINE)	2.13 MM (.084")	52108529AA

Copyright © 2009 ATSG

Figure 136

K-3 Clutch Housing Assembly (Cont'd)
"Single-Sided" Clutch Plates

30. Install the K-3 clutch dished cushion plate in the direction shown in Figure 138.
    Note: The .071" apply plate is not used in the "Single-Sided" stack-up.
31. Install the "single-sided" frictions beginning with an external spline plate and alternating with an internal spline plate, as shown in Figure 138, until you have the proper amount of plates installed.
32. Install the K-3 clutch backing plate, as shown in Figure 138.
33. Install the K-3 clutch *selective* snap ring, as shown in Figure 138.

Continued on Page 90

K-3 CLUTCH STACK-UP

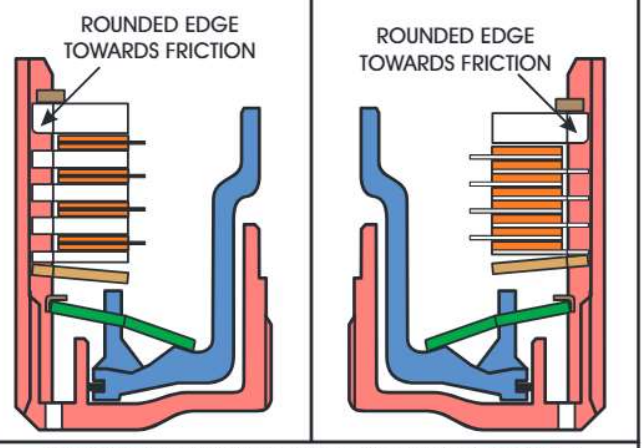

K-3 "DOUBLE-SIDED" MOST FREQUENTLY USED PLATES		
USAGE	THICKNESS	PART NUMBER
BACKING PLATE	3.98 MM (.157")	140 272 12 26
STEEL PLATE	3.5 MM (.138")	140 272 11 26
STEEL PLATE	2.78 MM (.109")	140 272 27 26
APPLY PLATE	1.8 MM (.071")	140 272 10 26
FRICTION PLATE	1.6 MM (.064")	140 272 02 25
FRICTION PLATE	2.16 MM (.085")	140 272 07 25

K-3 "SINGLE-SIDED" MOST FREQUENTLY USED PLATES		
USAGE	THICKNESS	PART NUMBER
BACKING PLATE	3.98 MM (.157")	140 272 12 26
FRICTION (INT-24 SPLINE)	2.13 MM (.084")	52108528AA
FRICTION (EXT-24 SPLINE)	2.13 MM (.084")	52108529AA

Copyright © 2009 ATSG

Figure 137

SINGLE SIDED STACK-UP

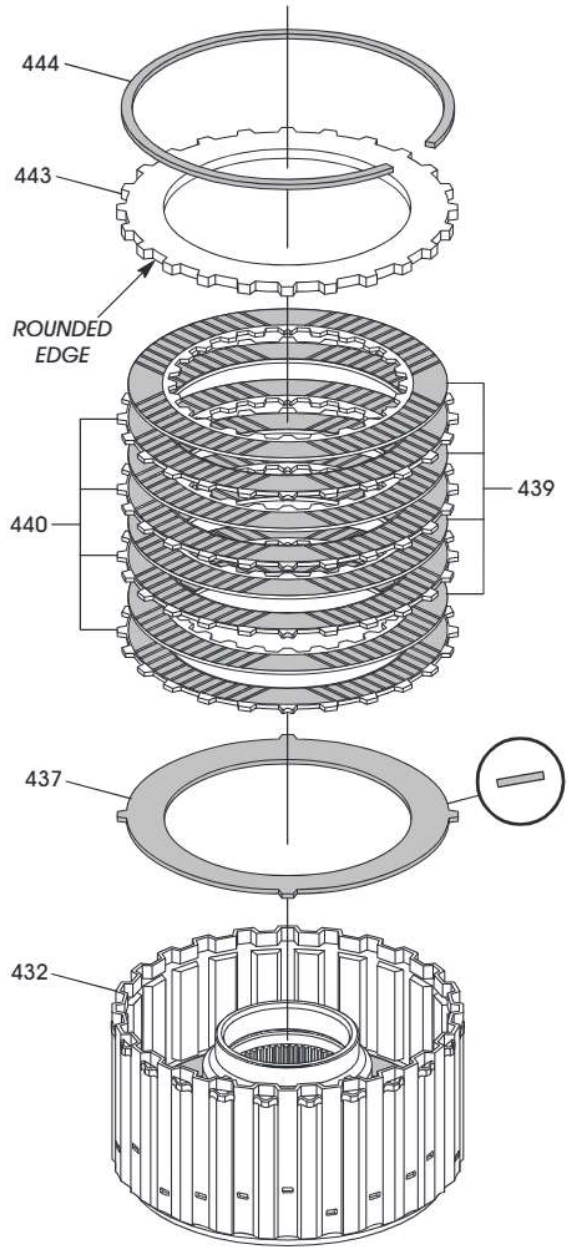

432 K-3 CLUTCH HOUSING ASSEMBLY.
437 K-3 CLUTCH DISHED CUSHION PLATE.
439 K-3 SINGLE SIDED "INTERNAL SPLINE" FRICTION PLATES.
440 K-3 SINGLE SIDED "EXTERNAL SPLINE" FRICTION PLATES.
443 K-3 CLUTCH BACKING PLATE (.157").
444 K-3 CLUTCH "*SELECTIVE*" SNAP RING.

Copyright © 2009 ATSG

Figure 138

K-3 Clutch Housing Assembly (Cont'd)

34. Measure K-3 clutch clearance using a feeler gauge between the selective snap ring and the backing plate, as shown in Figure 139.
35. K-3 clutch clearance will depend on how many friction plates are used in the pack. The proper clearances for each are listed in Figure 139.
    Note: ATSG clutch clearances vary from the Mercedes specification, as Mercedes uses a rather costly tool to compress the cushion plate in the clutch pack.
36. Change the selective snap ring as necessary to obtain the proper clutch clearance. There are 5 different snap ring thickness' available and are listed in Figure 139.
37. We have provided you with frequently used part numbers for the clutches in Figure 137. Keep in mind that part numbers can change without notice.
38. Set completed K-3 clutch housing assembly aside for gearset assembly process.
39. Install the center planetary ring gear into the rear planetary carrier and clutch hub assembly, as shown in Figure 140.
    Note: This ring gear does not need to be removed unless damaged.
40. Install the ring gear retaining snap ring into the rear planetary carrier, as shown in Figure 140, and ensure it is fully seated.

Continued on Page 91

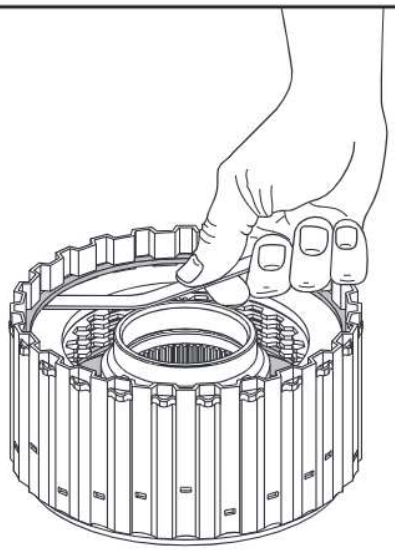

K-3 "Double-Sided" Clutch Clearance Should Be;
3 Frictions = 0.7 - 0.9mm (.028" - .035")
4 Frictions = 1.0 - 1.3mm (.039" - .051")
5 Frictions = 1.3 - 2.0mm (.051" - .059")

K-3 "Single-Sided" Clutch Clearance Should Be;
6 Frictions = 0.7 - 0.9mm (.028" - .035")
8 Frictions = 1.0 - 1.3mm (.039" - .051")
10 Frictions = 1.3 - 1.5mm (.051" - .059")

K-3 CLUTCH SELECTIVE SNAP RINGS	
THICKNESS	PART NUMBER
1.9 MM (.075")	140 994 99 40
2.2 MM (.086")	140 994 10 35
2.5 MM (.098")	140 994 11 35
2.8 MM (.110")	140 994 35 35
3.1 MM (.122")	140 994 36 35

Copyright © 2009 ATSG

Figure 139

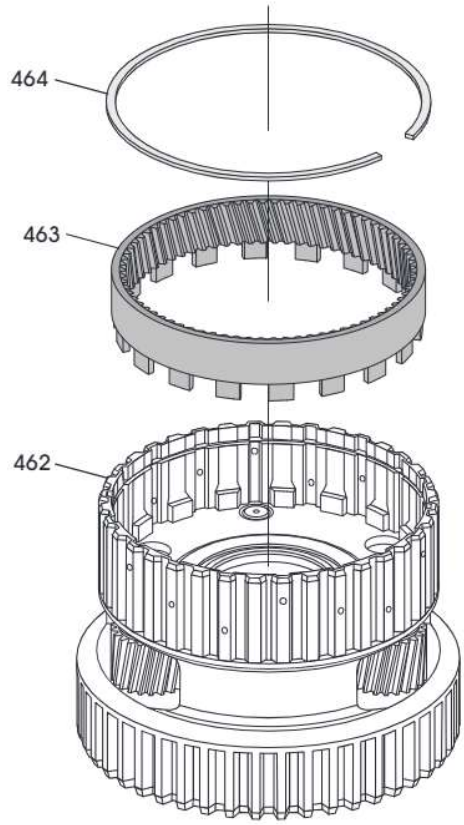

462 REAR PLANETARY CARRIER AND CLUTCH HUB ASSEMBLY.
463 CENTER PLANETARY RING GEAR.
464 CENTER PLANETARY RING GEAR RETAINING SNAP RING.

Copyright © 2009 ATSG

Figure 140

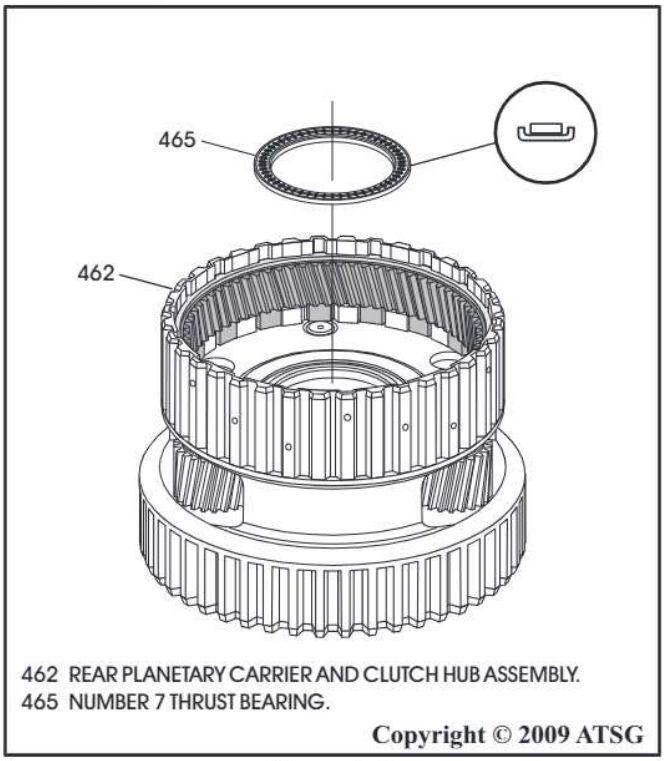

Figure 141

COMPONENT REBUILD (CONT'D)

Center & Rear Planetary Gearset (Cont'd)

41. Install the number 7 thrust bearing, as shown in Figure 141, by hand pressing into place. ***Note: The number 7 and number 8 thrust bearings have been updated with three small protrusions stamped into the outer bearing race and spaced equally around the outside diameter, as shown in Figure 142. This was done to prevent the outer race from turning in the rear carrier and clutch hub assembly. This increased durability by decreasing the planetary failures seen in the past.***
42. Ensure the number 7 thrust bearing is fully seated.
43. Install the number 8 thrust bearing, as shown in Figure 143, by hand pressing into place, and ensure that it is full seated.

Continued on Page 92

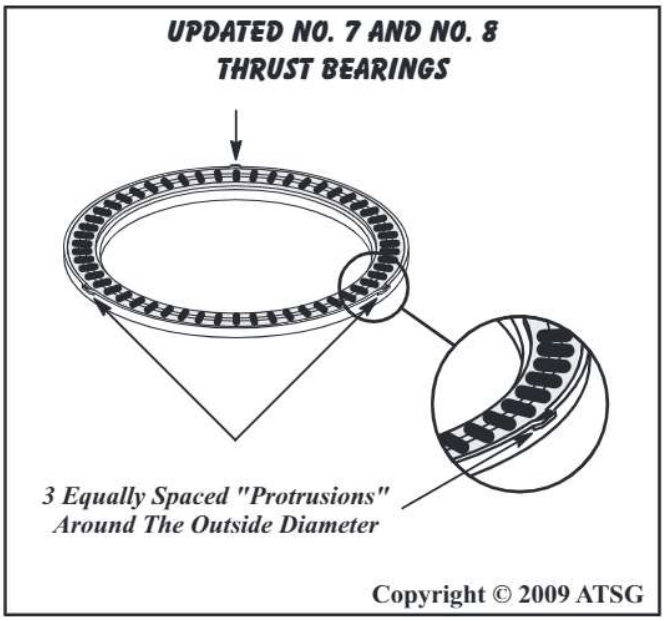

Figure 142

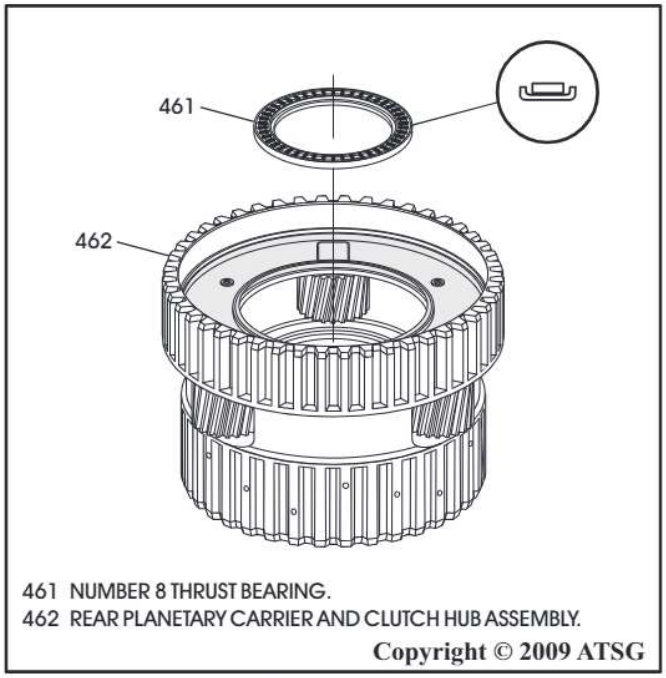

Figure 143

COMPONENT REBUILD (CONT'D)

Center & Rear Planetary Gearset (Cont'd)

44. Position the center planetary carrier and output shaft, as shown in Figure 144.
45. Install five new updated output shaft sealing rings into the five grooves of the output shaft, as shown in Figure 144.
    Note: Updated seal rings have "tabs" on the inside diameter and a step joint.
46. Ensure the step joints are properly engaged.
47. Install the number 6 thrust bearing race, as shown in Figure 145, and retain with a small amount of Trans-Jel®.
48. Install the caged needle bearing into the output shaft groove, as shown in Figure 145, by gently spreading just enough to get it over the output shaft.
49. Ensure that it spins freely in the groove after installation and apply some fluid.

Continued on Page 93

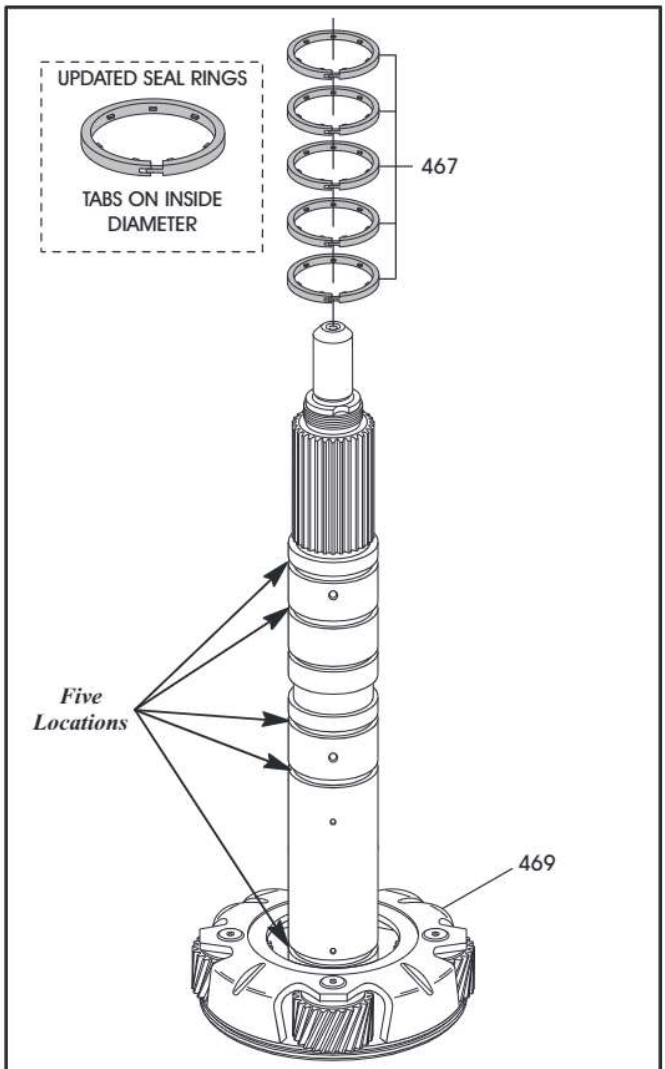

467 OUTPUT SHAFT SEALING RINGS (5 REQUIRED).
469 CENTER PLANETARY CARRIER AND OUTPUT SHAFT.

Copyright © 2009 ATSG

Figure 144

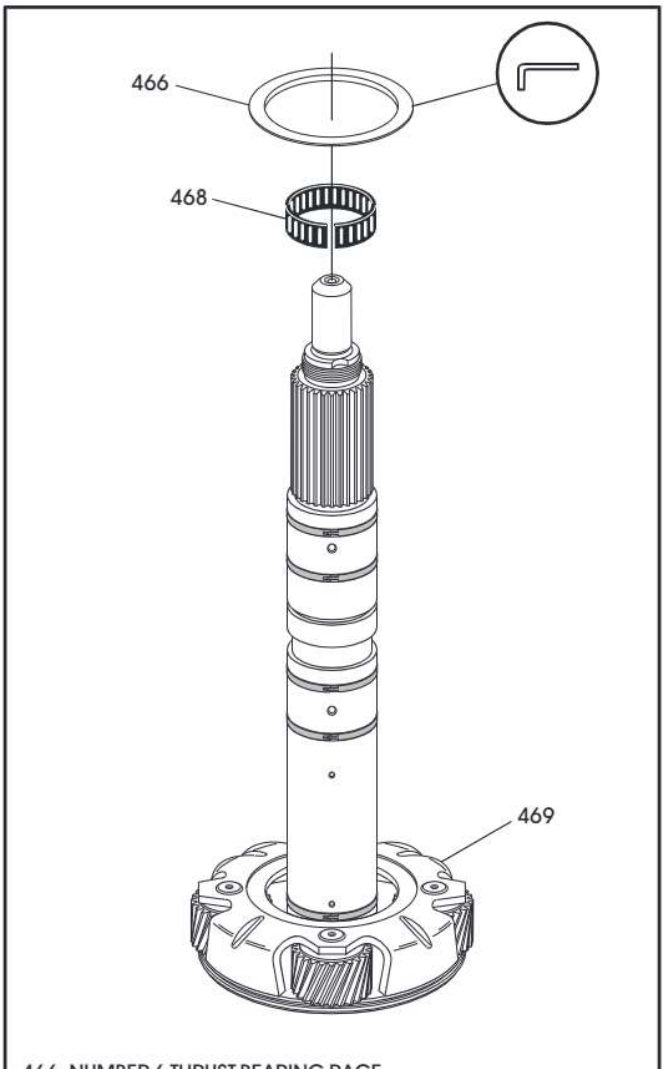

466 NUMBER 6 THRUST BEARING RACE.
468 OUTPUT SHAFT/SUN GEAR SHAFT CAGED NEEDLE BEARING.
469 CENTER PLANETARY CARRIER AND OUTPUT SHAFT.

Copyright © 2009 ATSG

Figure 145

COMPONENT REBUILD (CONT'D)

Center & Rear Planetary Gearset (Cont'd)

50. Install the rear carrier and clutch hub assembly as shown in Figure 146, by rotating to engage the center ring gear to the planetary pinions. ***Note: This would be a good time for one last check of the F-2 sprag assembly. Refer to Figure 130 on Page 84.***
51. Install the completed F-2 sprag and sun gear shaft assembly, as shown in Figure 147.

Continued on Page 94

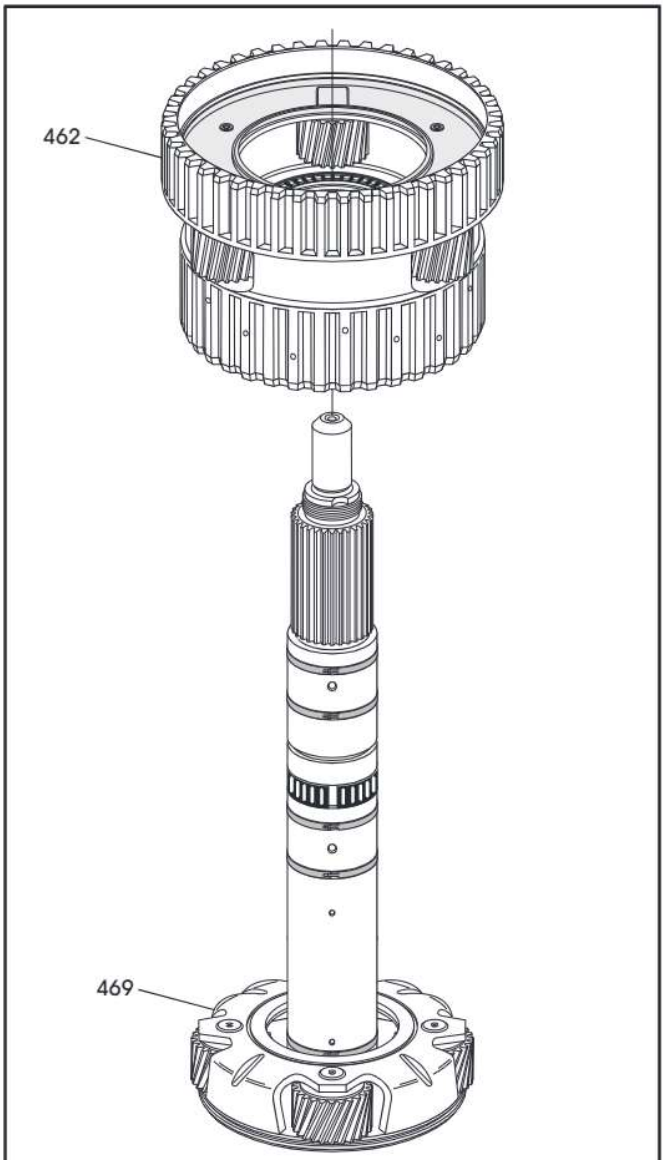

462 REAR PLANETARY CARRIER AND CLUTCH HUB ASSEMBLY.
469 CENTER PLANETARY CARRIER AND OUTPUT SHAFT.

Copyright © 2009 ATSG

Figure 146

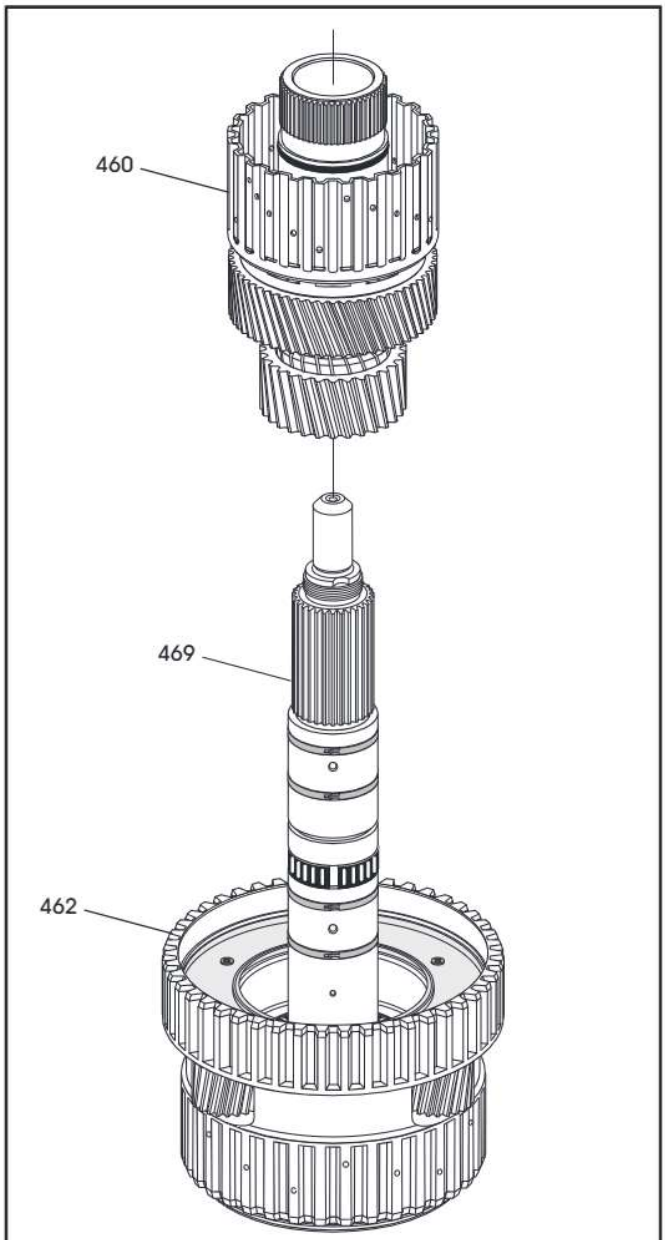

460 COMPLETED F-2 SPRAG AND SUN GEAR ASSEMBLY.
462 REAR PLANETARY CARRIER AND CLUTCH HUB ASSEMBLY.
469 CENTER PLANETARY CARRIER AND OUTPUT SHAFT.

Copyright © 2009 ATSG

Figure 147

COMPONENT REBUILD (CONT'D)

Center & Rear Planetary Gearset (Cont'd)

52. Lubricate the inside diameter of the K-3 piston in completed K-3 clutch housing with a small amount of Trans-Jel® (See Figure 148).
53. Install the completed K-3 clutch housing, as shown in Figure 148, rotating back and forth until fully seated.
    Note: There should be approximately 1/4 inch of sun gear shaft spline showing when fully seated, as shown in Figure 149.
54. Install the number 11 thrust bearing race, as shown in Figure 149.
55. Install the number 12 thrust bearing, as shown in Figure 149.
56. Install the number 13 thrust bearing race, as shown in Figure 149.
57. Install the sun gear shaft retaining snap ring, as shown in Figure 149.

Continued on Page 95

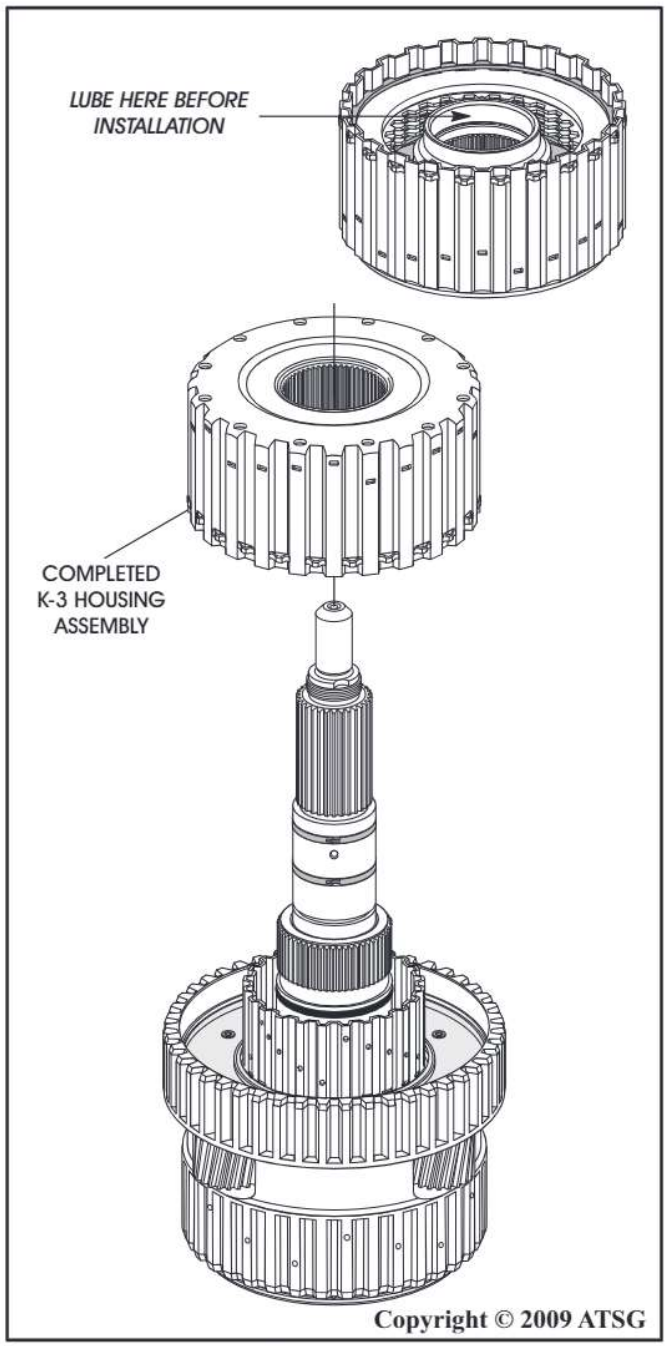

Figure 148

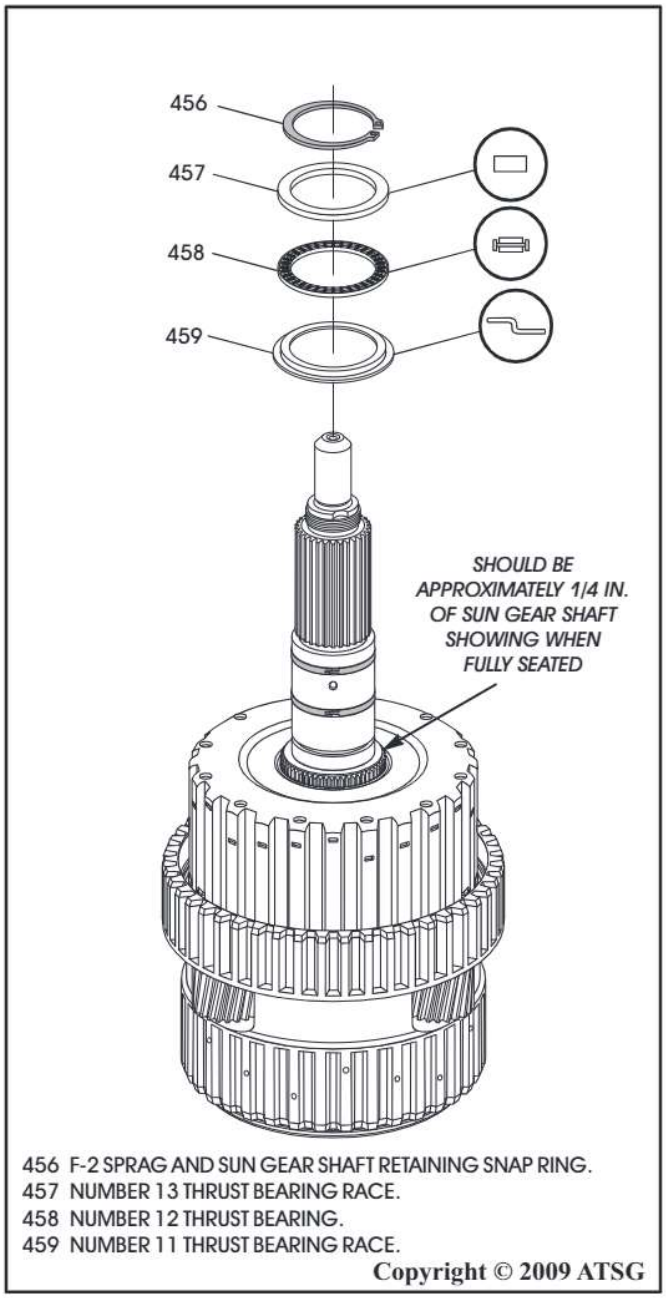

Figure 149

COMPONENT REBUILD (CONT'D)

Center & Rear Planetary Gearset (Cont'd)

58. Measure clearance using feeler gauge between snap ring and number 13 thrust bearing race, as shown in Figure 150.
59. The planetary gearset axial clearance should be 0.15mm - 0.6mm (.006" - .024"), as shown in Figure 150.
60. Change the number 13 thrust bearing race to obtain the proper clearance. There are three selectives for this location and are listed in Figure 150.
61. Turn the center and rear planetary gearset over and install number 5 thrust bearing, as shown in Figure 151.
    Note: Number 4 thrust bearing race was installed on K-2 clutch housing.
62. Set the completed center and rear planetary gearset aside for the final assembly process.

Component Rebuild
Continued on Page 96

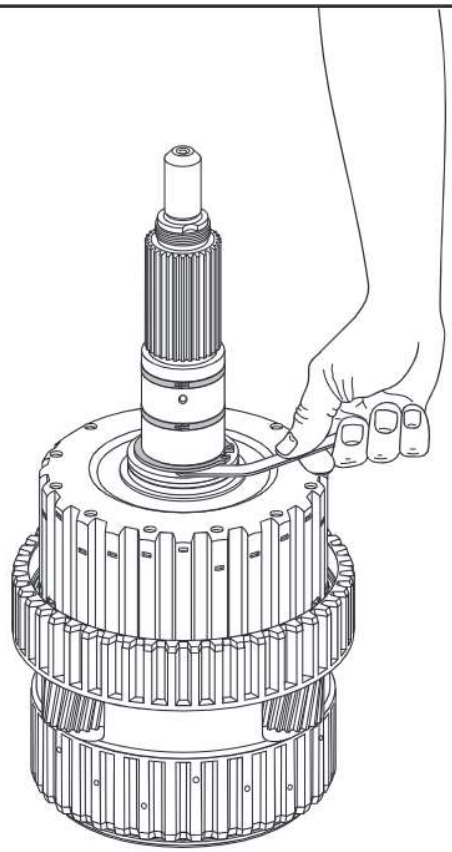

Axial Clearance Here Should Be;
0.15mm - 0.6mm (.006" - .024")

Selective Thickness' available:
3.0mm (.118")
3.4mm (.134")
3.7mm (.146")

Copyright © 2009 ATSG

Figure 150

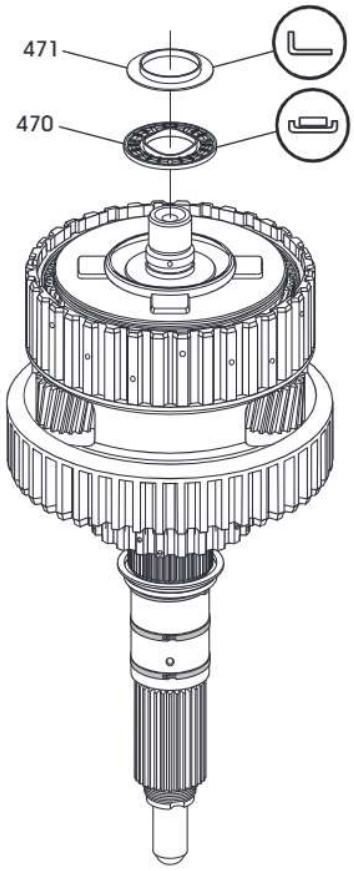

470 NUMBER 5 THRUST BEARING.
471 NUMBER 4 THRUST BEARING RACE.

Copyright © 2009 ATSG

Figure 151

B-2 CLUTCH AND RELATED PARTS, EXPLODED VIEW

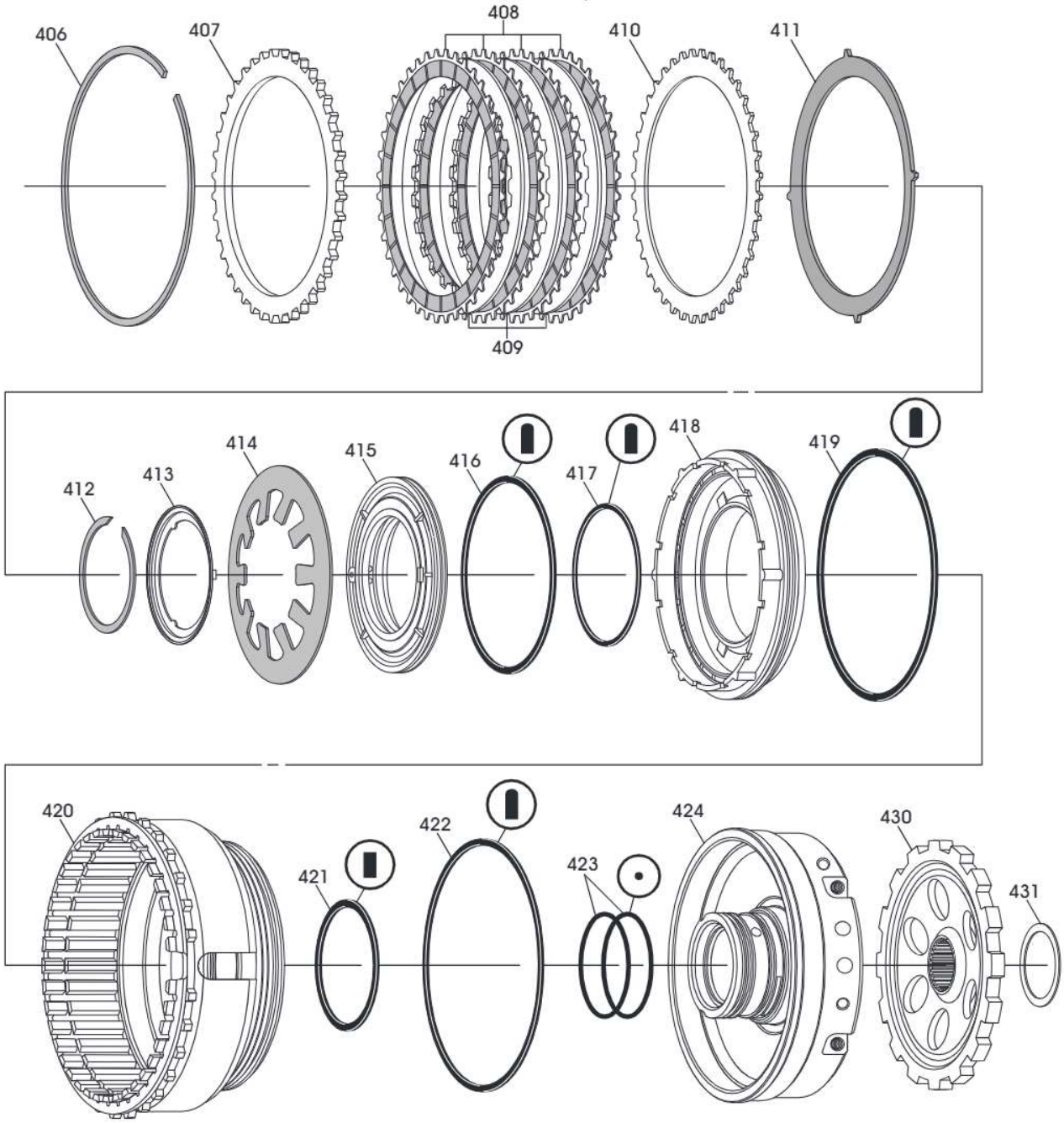

406 B-2 CLUTCH BACKING PLATE "SELECTIVE" SNAP RING.
407 B-2 CLUTCH BACKING PLATE.
408 B-2 CLUTCH FRICTION PLATES (EXTERNAL SPLINE).
409 B-2 CLUTCH STEEL PLATES (INTERNAL SPLINE).
410 B-2 CLUTCH APPLY PLATE (.071").
411 B-2 CLUTCH CUSHION PLATE.
412 B-2/B-3 APPLY PISTON SPRING RETAINER SNAP RING.
413 B-2/B-3 APPLY PISTON SPRING RETAINER.
414 B-2/B-3 APPLY PISTON RETURN SPRING.
415 B-2 APPLY PISTON GUIDE WITH 1-WAY CHECK VALVE.
416 B-2 APPLY PISTON GUIDE LARGE "D" RING SEAL.
417 B-2 APPLY PISTON GUIDE SMALL "D" RING SEAL.
418 B-2 CLUTCH APPLY PISTON.
419 B-2 CLUTCH APPLY PISTON OUTER "D" RING SEAL.
420 B-3 CLUTCH APPLY PISTON.
421 B-3 CLUTCH APPLY PISTON INNER SEAL (SQUARE-CUT).
422 B-3 CLUTCH APPLY PISTON OUTER "D" RING SEAL.
423 B-2/B-3 CLUTCH HOUSING INNER "O" RING SEALS (2 REQ).
424 B-2/B-3 CLUTCH PISTON HOUSING ASSEMBLY.
430 PARKING GEAR.
431 PARKING GEAR TO REAR BEARING SHIM (END-PLAY).

Copyright © 2009 ATSG

Figure 152

COMPONENT REBUILD (CONT'D)

B-2 Clutch Housing Assembly

1. Disassemble the B-2 clutch housing assembly using Figure 152 for a guide.
2. Clean all B-2 clutch housing parts thoroughly and dry with compressed air.
3. Inspect all B-2 clutch housing parts thoroughly for any wear and/or damage.
4. Install new square cut inner seal in B-3 clutch apply piston, as shown in Figure 153.
5. Install new "D" ring outer seal on B-3 clutch apply piston, as shown in Figure 153.
6. Lubricate both B-3 apply piston seals with a small amount of Trans-Jel®.
7. Install a new "D" ring seal on the small portion of the B-2 apply piston guide with the 1-way check valve, as shown in Figure 154.
8. Install a new "D" ring seal on the large portion of the B-2 apply piston guide with the 1-way check valve, as shown in Figuree 154.
9. Lubricate both B-2 apply piston guide seals with a small amount of Trans-Jel®.
10. Install a new outer "D" ring seal on B-2 clutch apply piston, as shown in Figure 155, and lube with a small amount of Trans-Jel®.

Continued on Page 98

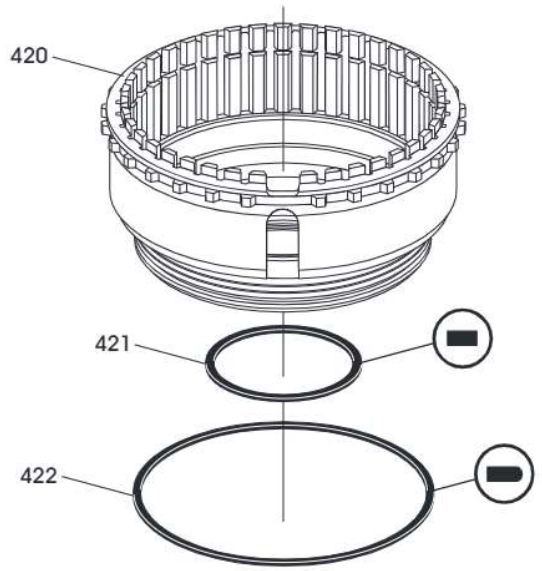

420 B-3 CLUTCH APPLY PISTON.
421 B-3 CLUTCH APPLY PISTON INNER SEAL (SQUARE-CUT).
422 B-3 CLUTCH APPLY PISTON OUTER "D" RING SEAL.

Copyright © 2009 ATSG

Figure 153

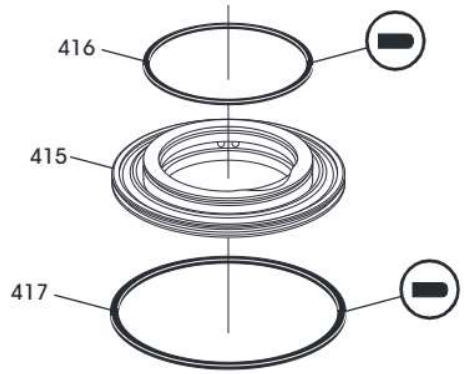

415 B-2 APPLY PISTON GUIDE WITH 1-WAY CHECK VALVE.
416 B-2 APPLY PISTON GUIDE LARGE "D" RING SEAL.
417 B-2 APPLY PISTON GUIDE SMALL "D" RING SEAL.

Copyright © 2009 ATSG

Figure 154

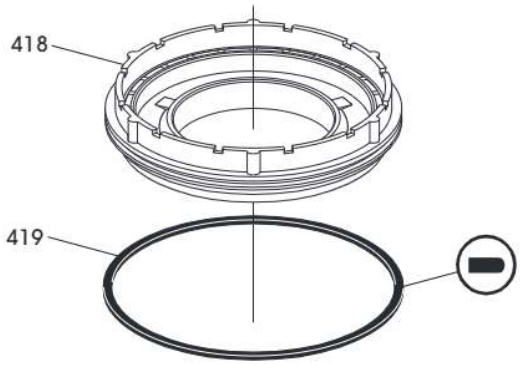

418 B-2 CLUTCH APPLY PISTON.
419 B-2 CLUTCH APPLY PISTON OUTER "D" RING SEAL.

Copyright © 2009 ATSG

Figure 155

COMPONENT REBUILD (CONT'D)

B-2 Clutch Housing Assembly (Cont'd)

11. Install two new "O" ring seals into the grooves of the B-2/B-3 clutch piston housing, as shown in Figure 156, and lubricate with small amount of Trans-Jel®.

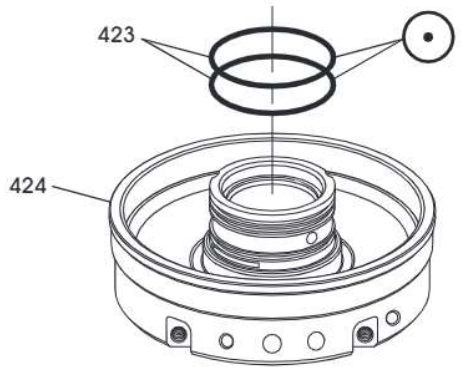

423 B-2/B-3 CLUTCH HOUSING INNER "O" RING SEALS (2 REQ).
424 B-2/B-3 CLUTCH PISTON HOUSING ASSEMBLY.

Copyright © 2009 ATSG

Figure 156

12. Place the B-2 apply piston on flat work surface with one of the "tabs" at ***exactly*** the 6-O-clock position, as shown in Figure 157.
13. Install B-2 apply piston guide with the 1-way check valve into the B-2 apply piston with the 1-way check ***exactly*** at the 12-O-clock position as shown in Figure 157.
    Caution: Step 12 and 13 must be followed "exactly" as written. This is to ensure that when we are ready to install the return spring retainer it will fit without complications.
14. The return spring retainer (413) has two off-set tabs on the inside diameter, that align with two off-set slots in the hub of the B-2/B-3 clutch piston housing assembly (424).
    Refer to Figure 158.
15. The return spring retainer also has a square tab on bottom of the retainer at 6-O-clock position that must align with a slot in B-2 apply piston guide at the 6-O-clock position.
    Refer to Figure 157 and 158.
    Note: All of this is designed so that it ensures the 1-way check valve is installed correctly, at the 12-O-clock position.

Continued on Page 99

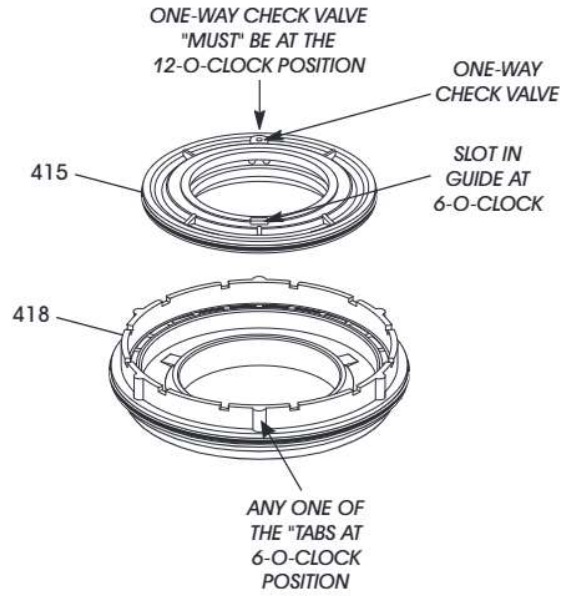

415 B-2 APPLY PISTON GUIDE WITH 1-WAY CHECK VALVE.
418 B-2 CLUTCH APPLY PISTON.

Copyright © 2009 ATSG

Figure 157

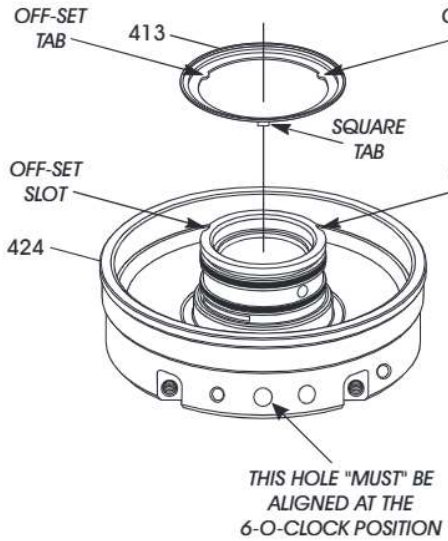

413 B-2/B-3 APPLY PISTON SPRING RETAINER.
424 B-2/B-3 CLUTCH PISTON HOUSING ASSEMBLY.

Copyright © 2009 ATSG

Figure 158

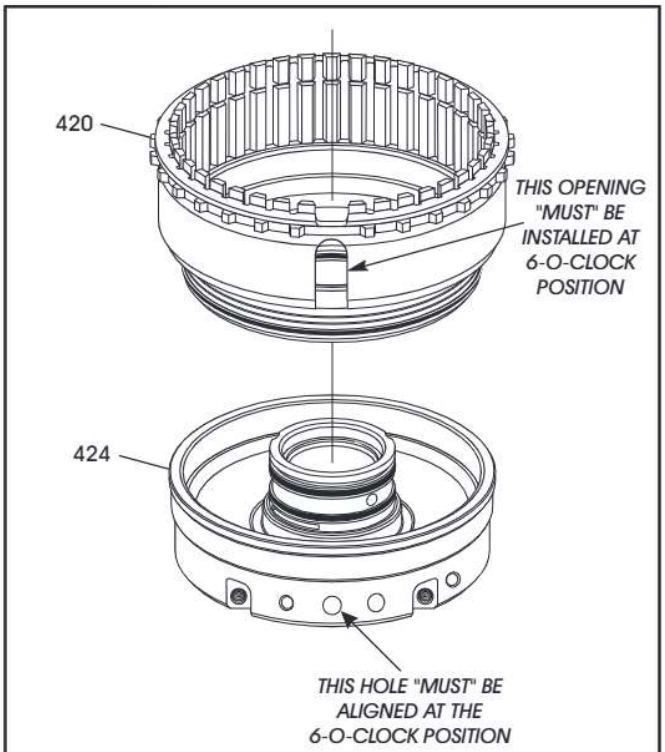

420 B-3 CLUTCH APPLY PISTON WITH SEALS.
424 B-2/B-3 CLUTCH PISTON HOUSING ASSEMBLY.

Copyright © 2009 ATSG

Figure 159

COMPONENT REBUILD (CONT'D)

B-2 Clutch Housing Assembly (Cont'd)

16. Place B-2/B-3 clutch piston housing assemby on a flat work surface with the hole shown in Figure 159 at ***exactly*** the 6-O-clock position.
17. Install B-3 clutch apply piston with opening at ***exactly*** the 6-O-clock position, as shown in Figure 159.
    Note: Steps 16 and 17 must be followed "exactly" as written. Align perfectly after piston is installed, if necessary.
18. Install the B-2 apply piston with B-2 piston guide installed, as shown in Figure 160.
    Note: 1-way check valve must be installed "exactly" at the 12-O-clock position and is shown in Figure 160.
19. Install the B-2/B-3 piston return spring in the direction shown in Figure 161.
20. Install B-2/B-3 piston return spring retainer, as shown in Figure 161.
21. Compress the return spring and retainer and install the snap ring, as shown in Figure 161. Everything done properly, it goes right on.

Continued on Page 100

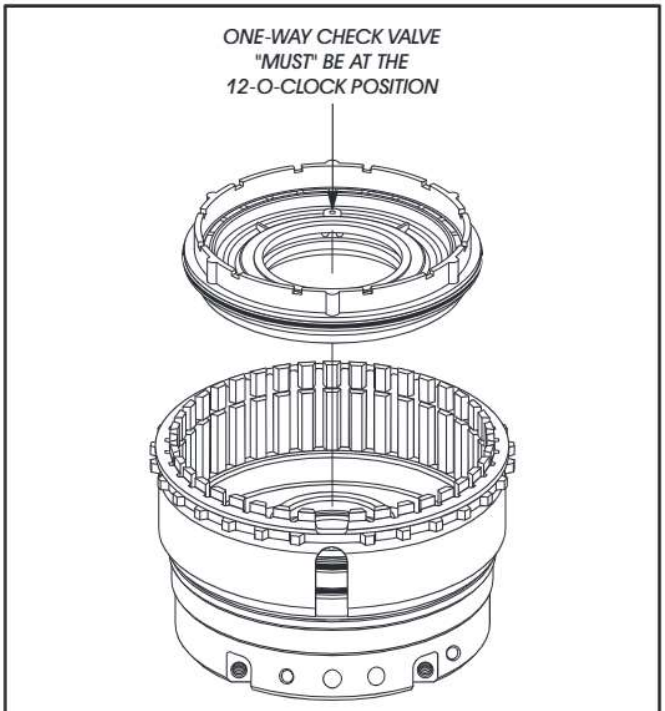

418 B-2 CLUTCH APPLY PISTON AND B-2 PISTON GUIDE.

Copyright © 2009 ATSG

Figure 160

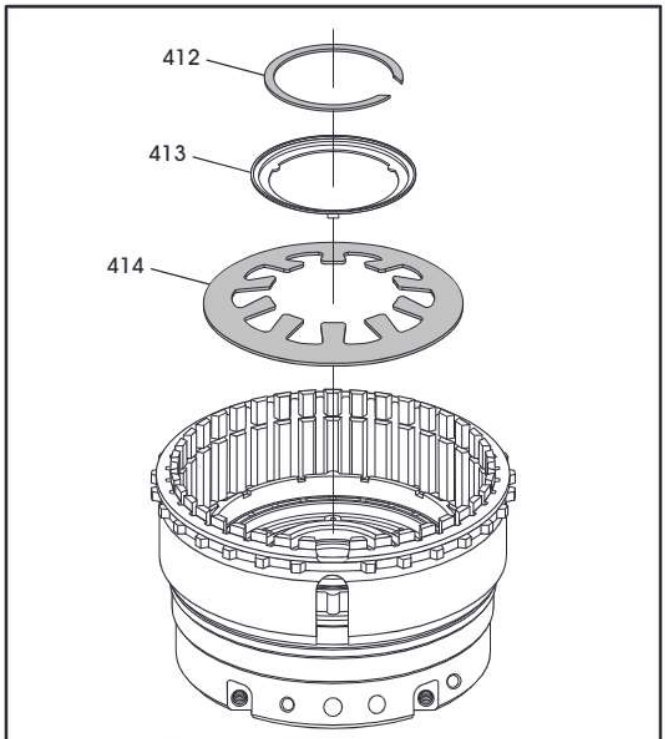

412 B-2/B-3 APPLY PISTON SPRING RETAINER SNAP RING.
413 B-2/B-3 APPLY PISTON SPRING RETAINER.
414 B-2/B-3 APPLY PISTON RETURN SPRING.

Copyright © 2009 ATSG

Figure 161

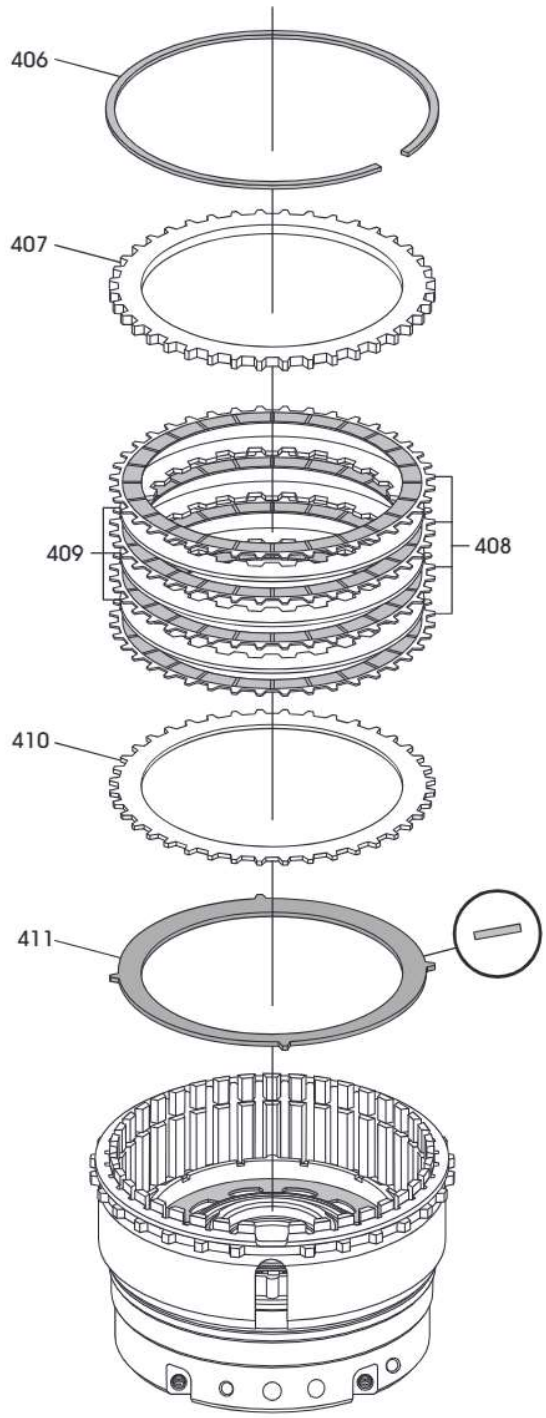

406 B-2 CLUTCH BACKING PLATE "SELECTIVE" SNAP RING.
407 B-2 CLUTCH BACKING PLATE.
408 B-2 CLUTCH FRICTION PLATES (EXTERNAL SPLINE).
409 B-2 CLUTCH STEEL PLATES (INTERNAL SPLINE).
410 B-2 CLUTCH APPLY PLATE (.071").
411 B-2 CLUTCH DISHED CUSHION PLATE.

Figure 162

COMPONENT REBUILD (CONT'D)

B-2 Clutch Housing Assembly (Cont'd)

22. Use caution when installing B-2 clutch plates.
    Caution: The B-2 clutch may have 4, or 5 "double-sided" friction plates depending on the model. Refer to the chart in Figure 163. All friction plates should be soaked in proper fluid for 30 minutes before installation.
23. Install the B-2 clutch dished cushion plate in the direction shown in Figure 162.
24. Install the B-2 clutch .071" thick apply plate, as shown in Figure 162.
25. Install "double-sided" clutches beginning with a friction plate and alternating with steel plates, as shown in Figure 162, until you have proper number of plates installed.
    Note: Steel plate thickness will vary depending on snap ring groove location and number of frictions required (See Figure 163). Also unique to the B-2 clutch, steel plates are inside spline and frictions are external spline.
26. Install the B-2 clutch backing plate, as shown in Figure 162.
27. Install the B-2 clutch *selective* snap ring, as shown in Figure 162.

Continued on Page 101

B-2 CLUTCH QUANTITY CHART BY MODEL

TRANSMISSION MODEL	LINED PLATE	STEEL PLATE	BACK. PLATE	THIN APPLY PLATE
722.600/660	4	3	1	1
722.601/602/603/610	4	3	1	1
722.604/606/609/617	4	3	1	1
722.605/607/608/611/614 618/662/664/699	5	4	1	1
722.665	4	3	1	1
722.620/621/624/626/627 628/630/633/636/666	5	4	1	1
722.622/623/625 631/632/663/669	5	4	1	1
722.629/634/661	5	4	1	1

The number of B-2 friction plates used is model dependant and determined by the backing plate snap ring location and the thickness of the steel plates.

Copyright © 2009 ATSG

Figure 163

COMPONENT REBUILD (CONT'D)

B-2 Clutch Housing Assembly (Cont'd)

28. Measure B-2 clutch clearance using a feeler gauge between the selective snap ring and the backing plate, as shown in Figure 164.
29. B-2 clutch clearance will depend on how many friction plates are used in the pack. The proper clearances for each are listed in Figure 164. ***Note: ATSG clutch clearances vary from the Mercedes specification, as Mercedes uses a rather costly tool to compress the cushion plate in the clutch pack.***
30. Change the selective snap ring as necessary to obtain the proper clutch clearance. There are 5 different snap ring thickness' available and are listed in Figure 164.
31. We have provided you with frequently used part numbers for the clutches in Figure 165. Keep in mind that part numbers can change without notice.
32. Set completed B-2 clutch housing assembly aside for the final assembly process.

Component Rebuild
Continued on Page 102

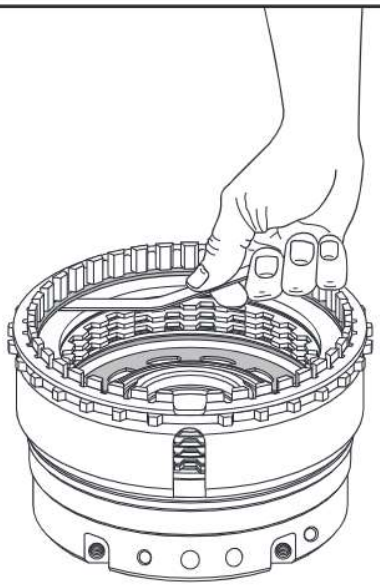

B-2 Clutch Clearance Should Be;
4 Frictions = 0.2 - 1.3mm (.008" - .051")
5 Frictions = 0.2 - 1.4mm (.008" - .055")

B-2 CLUTCH SELECTIVE SNAP RINGS	
THICKNESS	PART NUMBER
2.8 MM (.110")	140 994 63 35
3.1 MM (.122")	140 994 62 35
3.4 MM (.134")	140 994 61 35
3.7 MM (.146")	140 994 60 35
4.0 MM (.157")	140 994 59 35

Figure 164

B-2 CLUTCH CUT-AWAY

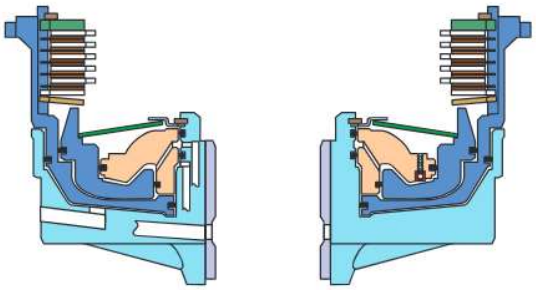

B-2 CLUTCH MOST FREQUENTLY USED PLATES		
USAGE	THICKNESS	PART NUMBER
BACKING PLATE	6.47 MM (.255")	140 272 23 26
STEEL (INT-24 SPLINE)	1.8 MM (.071")	140 272 04 25
APPLY (EXT-40 SPLINE)	1.8 MM (.071")	140 272 14 26
FRICTION (EXT-40 SPLINE)	1.6 MM (.064")	140 272 00 26
NOTE: PARTIAL LIST!		

Figure 165

COMPLETED B-2 CLUTCH ASSEMBLY

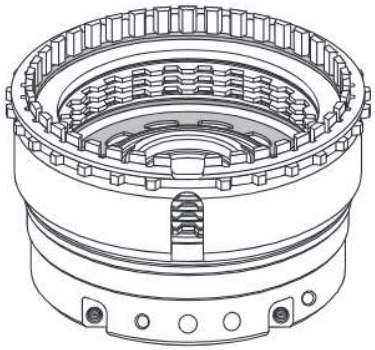

Copyright © 2009 ATSG

Figure 166

MERCEDES 722.6 VALVE BODY ASSEMBLY, EXPLODED VIEW

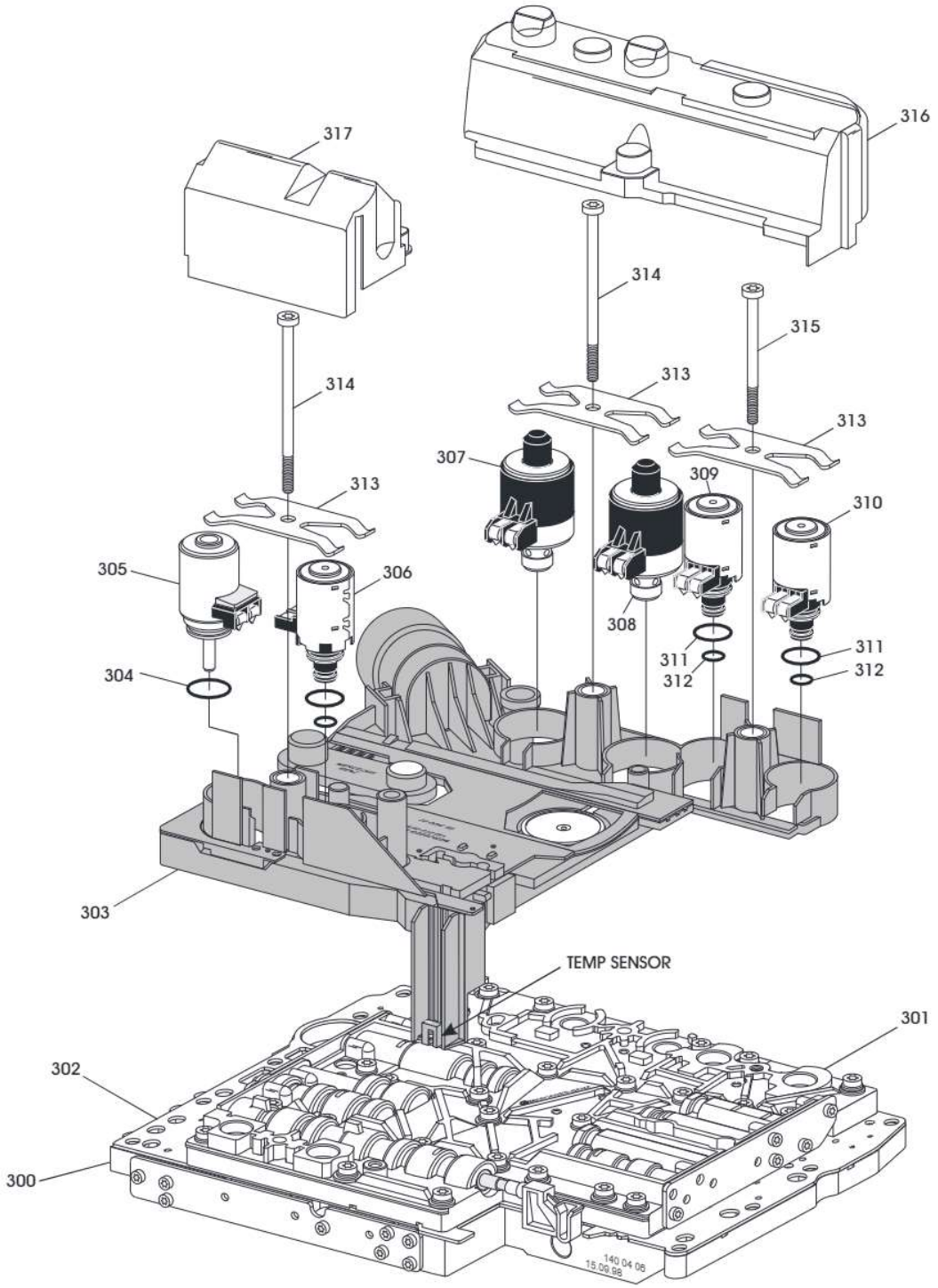

300 LOWER VALVE BODY ASSEMBLY.
301 UPPER VALVE BODY ASSEMBLY.
302 VALVE BODY SPACER PLATE.
303 ELECTRICAL CONDUCTOR PLATE.
304 TCC CONTROL SOLENOID "O" RING.
305 TCC CONTROL SOLENOID.
306 2-3 SHIFT SOLENOID.
307 MODULATING PRESSURE CONTROL SOLENOID (MPC).
308 SHIFT PRESSURE CONTROL SOLENOID (SPC).
309 1-2/4-5 SHIFT SOLENOID.
310 3-4 SHIFT SOLENOID.
311 SHIFT SOLENOID LARGE "O" RING (3 REQUIRED).
312 SHIFT SOLENOID SMALL "O" RING (3 REQUIRED).
313 SOLENOID HOLD DOWN BRACKETS (3 REQUIRED).
314 SOLENOID RETAINING BOLT, 79.50MM LENGTH (2 REQUIRED).
315 SOLENOID RETAINING BOLT, 55.50MM LENGTH (1 REQUIRED).
316 LARGE PLASTIC SOLENOID COVER.
317 SMALL PLASTIC SOLENOID COVER.

Copyright © 2009 ATSG

Figure 167

COMPONENT REBUILD (CONT'D)

Valve Body Assembly

1. Place the valve body assembly on a flat work surface, with the filter side facing, as shown in Figure 167.
2. Remove the two white plastic solenoid covers, as shown in Figure 167.
   Note: They just snap into place.
3. Remove the three solenoid retaining bracket bolts, as shown in Figure 167.
   Note: Notice that 1 is shorter than the other two, and its location.
4. Remove all of the solenoids from the electrical conductor plate, as shown in Figure 167, and set them aside for now.
5. Remove electrical conductor plate by gently prying out the temp sensor support where it snaps under the spacer plate tab, and release the push thru tab by the case connector. Refer to Figure 169.
6. Remove the inside detent spring and retaining bolt, as shown in Figure 169.

Continued on Page 104

MERCEDES 722.6 VALVE BODY ASSEMBLY, EXPLODED VIEW

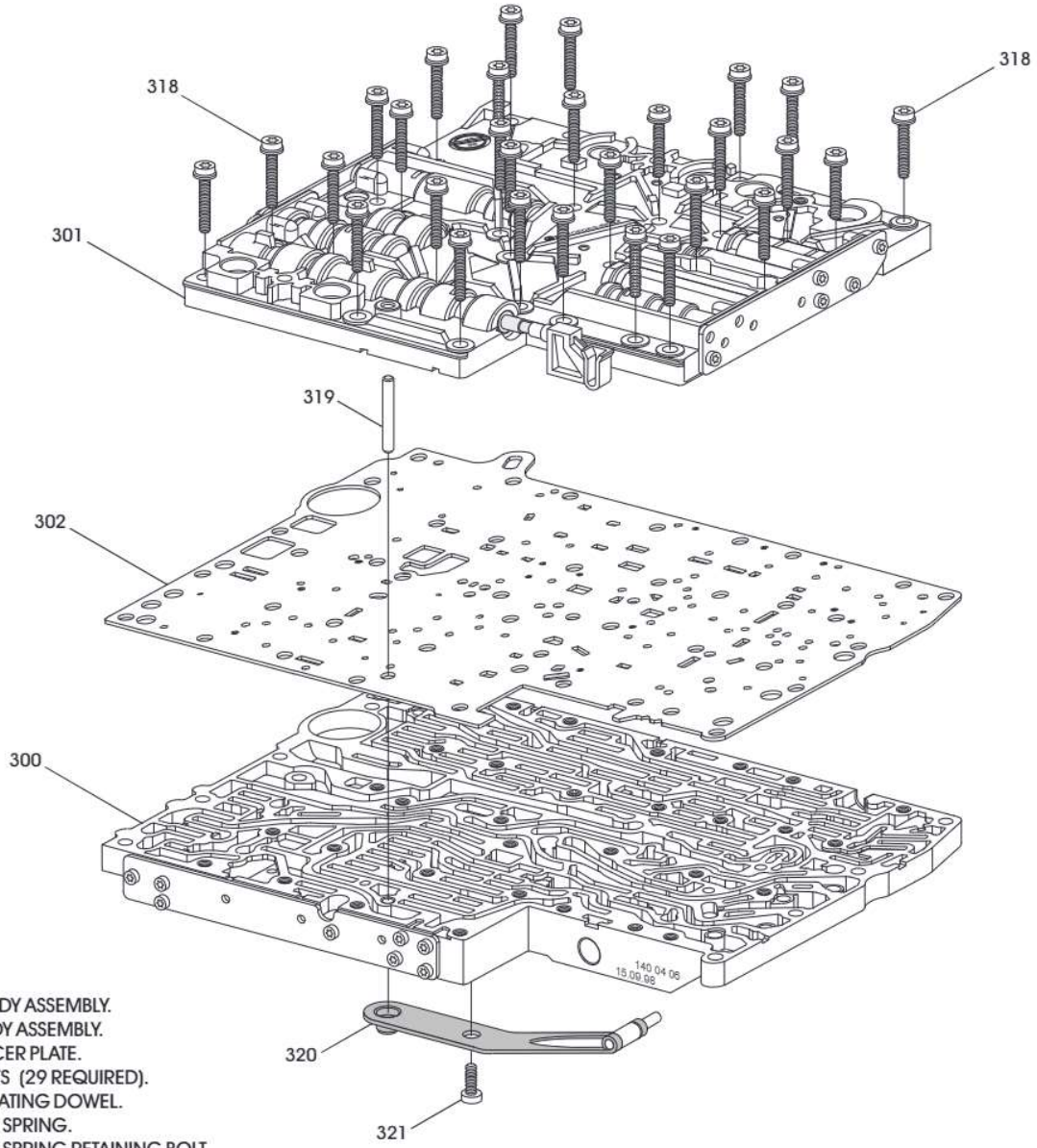

300 LOWER VALVE BODY ASSEMBLY.
301 UPPER VALVE BODY ASSEMBLY.
302 VALVE BODY SPACER PLATE.
318 VALVE BODY BOLTS (29 REQUIRED).
319 VALVE BODY LOCATING DOWEL.
320 INTERNAL DETENT SPRING.
321 INTERNAL DETENT SPRING RETAINING BOLT.

Copyright © 2009 ATSG

Figure 168

COMPONENT REBUILD (CONT'D)

Valve Body Assembly (Cont'd)

7. Remove the alignment dowel pin, as shown in Figure 168.
   Note: This is a free floating dowel captured on one side by the detent spring and electrical conductor plate on the other side. It will fall out if you do not remove it now.
8. Remove the 29 valve body bolts, as shown in Figure 168, using a 30 Torx bit.
9. Seperate the upper and lower valve bodies and spacer plate, as shown in Figure 168.
10. Remove the 12 check balls (4 plastic - 8 steel), 2 solenoid screens and 1 check valve from the lower valve body, as shown in Figure 172.
11. Remove the manual valve from upper valve body, as shown in Figure 171.
12. Remove the 2 pressure solenoid screens from upper valve body, as shown in Figure 171.
13. Remove the screws retaining the front and rear cover plates on the upper valve body, as shown in Figure 171.
14. Disassemble the upper valve body and place the springs, valves and sleeves on trays ***exactly*** as they were removed, using Figure 171 as a reference and guide.
    Note: The sleeves and valves of the overlap regulator vales must not be mixed up as they have different inside diameters. Refer to Figure 170.
15. Remove the screws retaining the left and right cover plates on the lower valve body, as shown in Figure 172.
16. Disassemble the lower valve body and place the springs, valves and sleeves on trays exactly as they were removed, using Figure 172 as a reference and guide.
17. Clean all valve body parts thoroughly and dry with compressed air.
18. Inspect all valve body parts thoroughly for any wear and/or damage.

    Note: An "Update Handbook" with the familiar Green cover, is available from ATSG and includes much more information on the valve body variations that are found in the 722.6 transmission.

Valve Body Wear & Damage Concerns

Concern 1: Notice in Figure 172 that there are two different designs of the Control Valve Pressure Regulator Line-Up (352). The 1st design spring is known to break and creates delayed engagements and soft or flared shifts. Mercedes part number for a new OEM spring is 140 993 58 01.

Concern 2: Inspect the inside diameter of the overlap regulator valve sleeves for signs of wear. Shiney patches indicate excessive wear. These sleeves are available from Sonnax® under part number 68942-05K in a kit that includes all three of them. Refer to Figure 170. They are also available individually.

Continued on Page 105

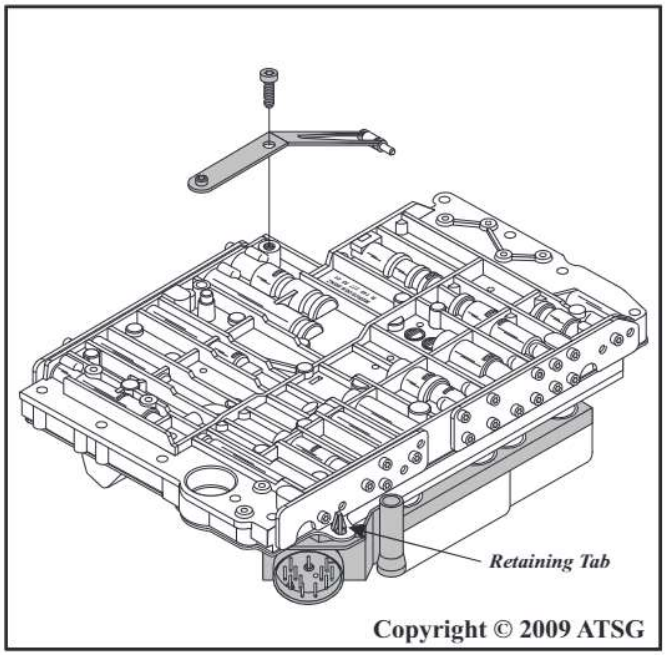

Figure 169

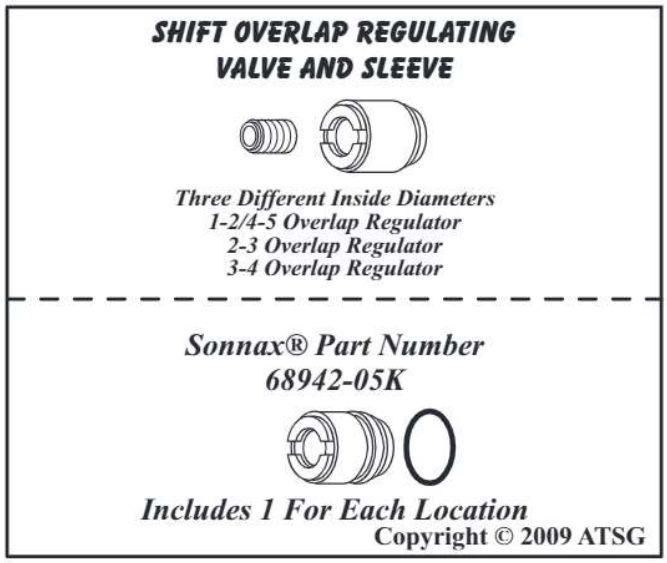

Figure 170

COMPONENT REBUILD (CONT'D)

Valve Body Assembly (Cont'd)

19. Install the valves, springs and sleeves into the upper valve body casting ***exactly*** as they were removed, using Figure 171 as a guide, and lube with the proper fluid as they are installed.
    Note: Sleeves, valves and springs of overlap regulator valves must not be mixed. Overlap sleeves are installed with slots facing out.
20. Install upper valve body front and rear cover plates, as shown in Figure 171, and torque the bolts to 4 N·m (35 in.lb.).
    Note: The number of bolts in each cover plate will vary depending on model.
21. Install the manual valve into the upper valve body, as shown in Figure 171.
    Note: Manual valve cannot be installed after the valve bodies are bolted together, as there is a tab on the spacer plate that prevents it from falling out.
22. Install the valves, springs, sleeves, bore plugs and retainers into the lower valve body casting exactly as removed, and lube with the proper fluid as installed. Use Figure 172 as a guide. Overlap sleeve installed with slots facing out.
23. Install lower valve body left and right cover plates, as shown in Figure 172, and torque the bolts to 4 N·m (35 in.lb.).
    Note: The number of bolts in each cover plate will vary depending on model.
24. Lay the lower valve body on flat work surface with the worm tracks facing up, as shown in Figure 172, and install the inside detent spring on the bottom side of the lower valve body.
25. Install the retaining bolt and hand tighten only.
26. Install the 12 check balls (4 plastic - 8 steel) in the proper locations, as shown in Figure 173.
27. Install the 2 solenoid screens in their proper locations, as shown in Figure 173.
28. Install plastic check valve in its proper location as shown in Figure 173.
    Note: Install as shown in Figure 173. Some publications are wrong.
29. Install the alignment dowel and move detent spring so that dowel engages the pocket in the detent spring so that dowel cannot fall out.
30. Install the spacer plate onto lower valve body and over the alignment dowel, as shown in Figure 172.
31. Install completed upper valve body over the alignment dowel and onto the spacer plate, as shown in Figure 168.
    Note: Again, make sure the manual valve is in place in the upper valve body.
32. Install 29 required valve body bolts, as shown in Figure 168, and torque valve body bolts to 8 N·m (71 in.lb.).
33. Install the two pressure solenoid screens into the upper valve body, as shown in Figure 171.
34. Install the electrical conductor plate onto the upper valve body, as shown in Figure 167.
    Note: Electrical Conductor Plate snaps into position on spacer plate tab and through a hole in spacer plate. Refer to Figure 169.
35. Check all solenoids using the resistance specs on Page 23 of this manual.
36. Install the two pressure control solenoids (307) and (308) as shown in Figure 167.
    Note: These two solenoids do not use any "O" ring seals.
37. Install new "O" ring seals on the three shift shift solenoids (306), (309), and (310), as shown in Figure 167.
38. Install the three shift solenoids in their proper positions, as shown in Figure 167.
39. Install new "O" ring on the TCC solenoid (305) as shown in Figure 167.
40. Install the TCC solenoid in its proper position, as shown in Figure 167.
41. Install the three solenoid hold down brackets, as shown in Figure 167, and the three hold down bracket bolts.
    Note: Notice the position of the short bolt.
42. Torque the three solenoid hold down bracket bolts to 8 N·m (71 in.lb.).
43. Snap the two white solenoid covers into place over the solenoids, as shown in Figure 167.
44. Set completed valve body aside for the final assembly process.

Copyright © 2009 ATSG

MERCEDES 722.6 "UPPER" VALVE BODY, EXPLODED VIEW

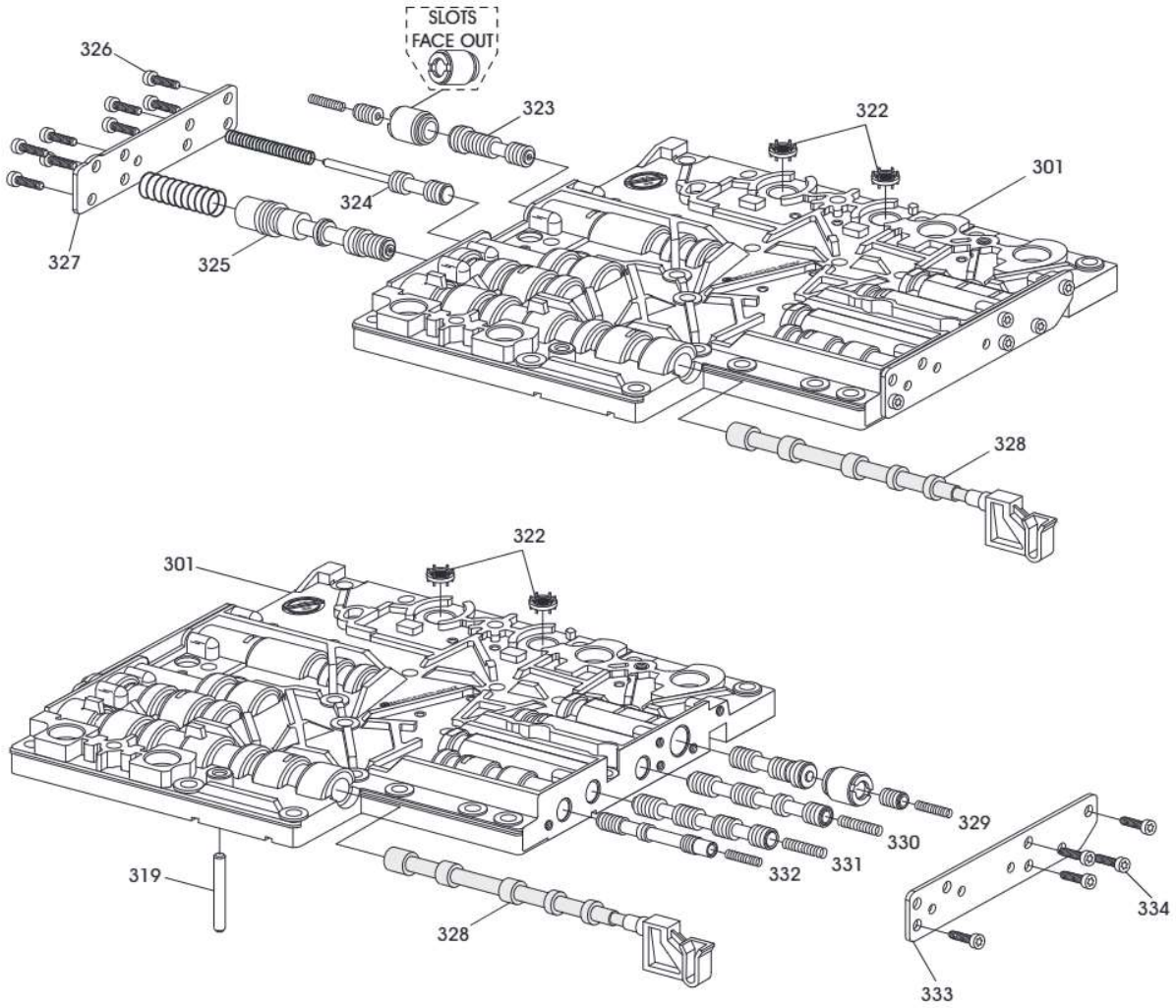

300 LOWER VALVE BODY CASTING.
301 UPPER VALVE BODY CASTING.
302 VALVE BODY SPACER PLATE.
319 VALVE BODY LOCATING DOWEL.
320 INTERNAL DETENT SPRING.
321 INTERNAL DETENT SPRING RETAINING BOLT.
322 PRESSURE SOLENOID SCREENS (2 REQUIRED).
323 2-3 OVERLAP REGULATOR VALVE LINE-UP.
324 LUBRICATION PRESSURE REGULATOR VALVE LINE-UP.
325 OPERATING PRESSURE REGULATOR VALVE LINE-UP.
326 FRONT COVER PLATE RETAINING BOLTS (QUANTITY VARIES).
327 UPPER VALVE BODY FRONT COVER PLATE.
328 MANUAL VALVE.
329 3-4 OVERLAP REGULATOR VALVE LINE-UP.
330 3-4 PRESSURE SHIFT VALVE LINE-UP.
331 3-4 SHIFT COMMAND VALVE LINE-UP.
332 3-4 HOLDING PRESSURE SHIFT VALVE LINE-UP.
333 UPPER VALVE BODY REAR COVER PLATE.
334 REAR COVER PLATE RETAINING BOLTS (QUANTITY VARIES).
335 LOWER VALVE BODY SCREENS (2 REQUIRED).
336 PLASTIC CHECK BALLS (4 REQUIRED).
337 STEEL CHECK BALLS (8 REQUIRED).
338 CHECK VALVE (NOTICE DIRECTION).
339 B-2 SHIFT VALVE LINE-UP.
340 2-3 HOLDING PRESSURE SHIFT VALVE LINE-UP.
341 2-3 SHIFT COMMAND VALVE LINE-UP.
342 2-3 PRESSURE SHIFT VALVE LINE-UP.
343 TCC DAMPER VALVE LINE-UP (IF EQUIPPED).
344 TCC LOCK-UP REGULATOR VALVE LINE-UP.
345 LOWER VALVE BODY RIGHT SIDE COVER PLATE.
346 COVER PLATE RETAINING BOLTS (QUANTITY VARIES).
347 1-2/4-5 SHIFT COMMAND VALVE LINE-UP.
348 1-2/4-5 HOLDING PRESSURE SHIFT VALVE LINE-UP.
349 1-2/4-5 PRESSURE SHIFT VALVE LINE-UP.
350 1-2/4-5 OVERLAP REGULATING VALVE LINE-UP.
351 SHIFT PRESSURE REGULATOR VALVE LINE-UP.
352 CONTROL VALVE PRESSURE REGULATOR VALVE LINE-UP.
353 SHIFT VALVE PRESSURE REGULATOR VALVE LINE-UP.
354 LOWER VALVE BODY LEFT REAR COVER PLATE.
355 COVER PLATE RETAINING BOLTS (QUANTITY VARIES).
356 COVER PLATE RETAINING BOLTS (QUANTITY VARIES).
357 LOWER VALVE BODY LEFT FRONT COVER PLATE.

Copyright © 2009 ATSG

Figure 171

MERCEDES 722.6 "LOWER" VALVE BODY, EXPLODED VIEW

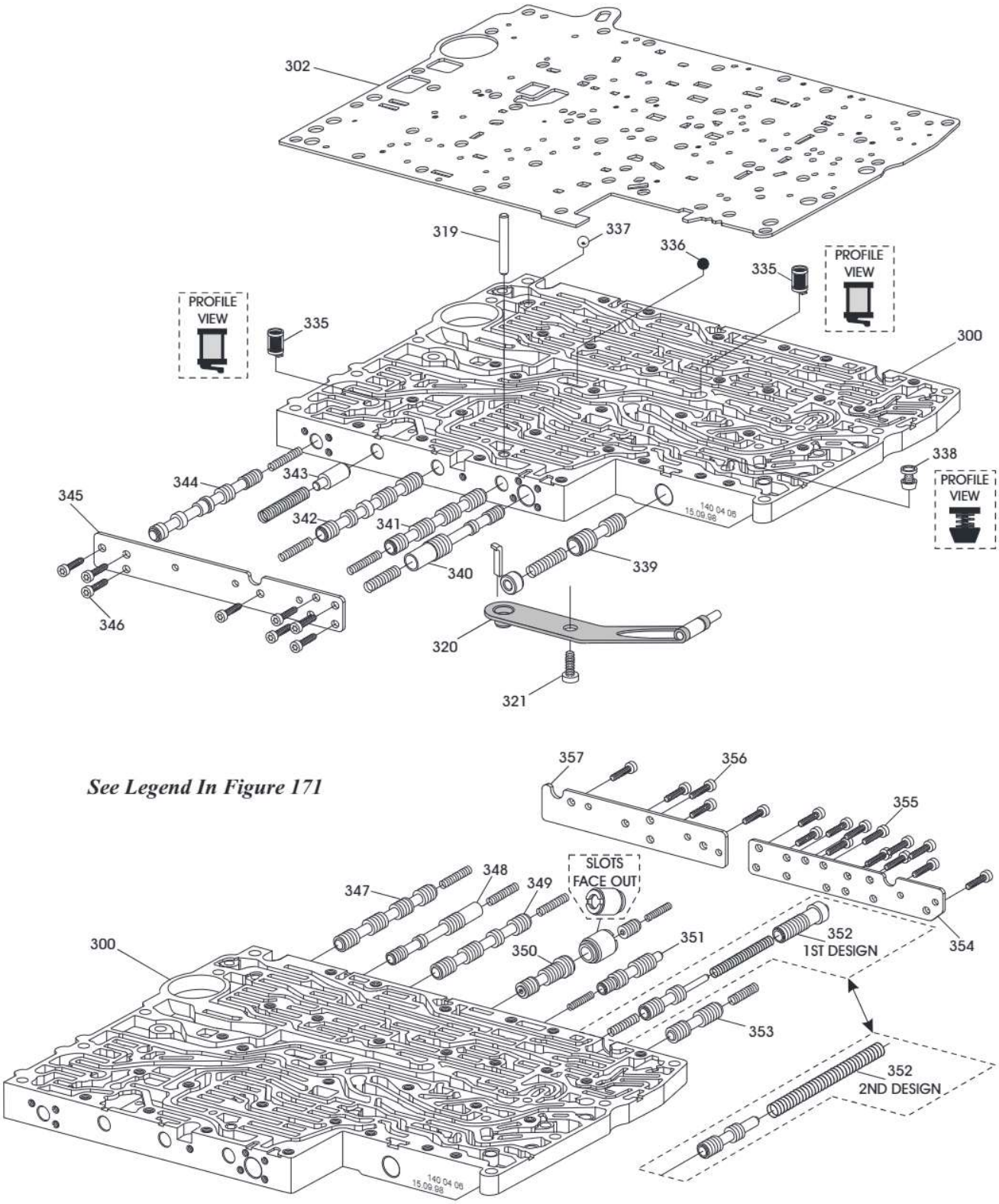

Copyright © 2009 ATSG

Figure 172

CHECK BALL LOCATION AND IDENTIFICATION

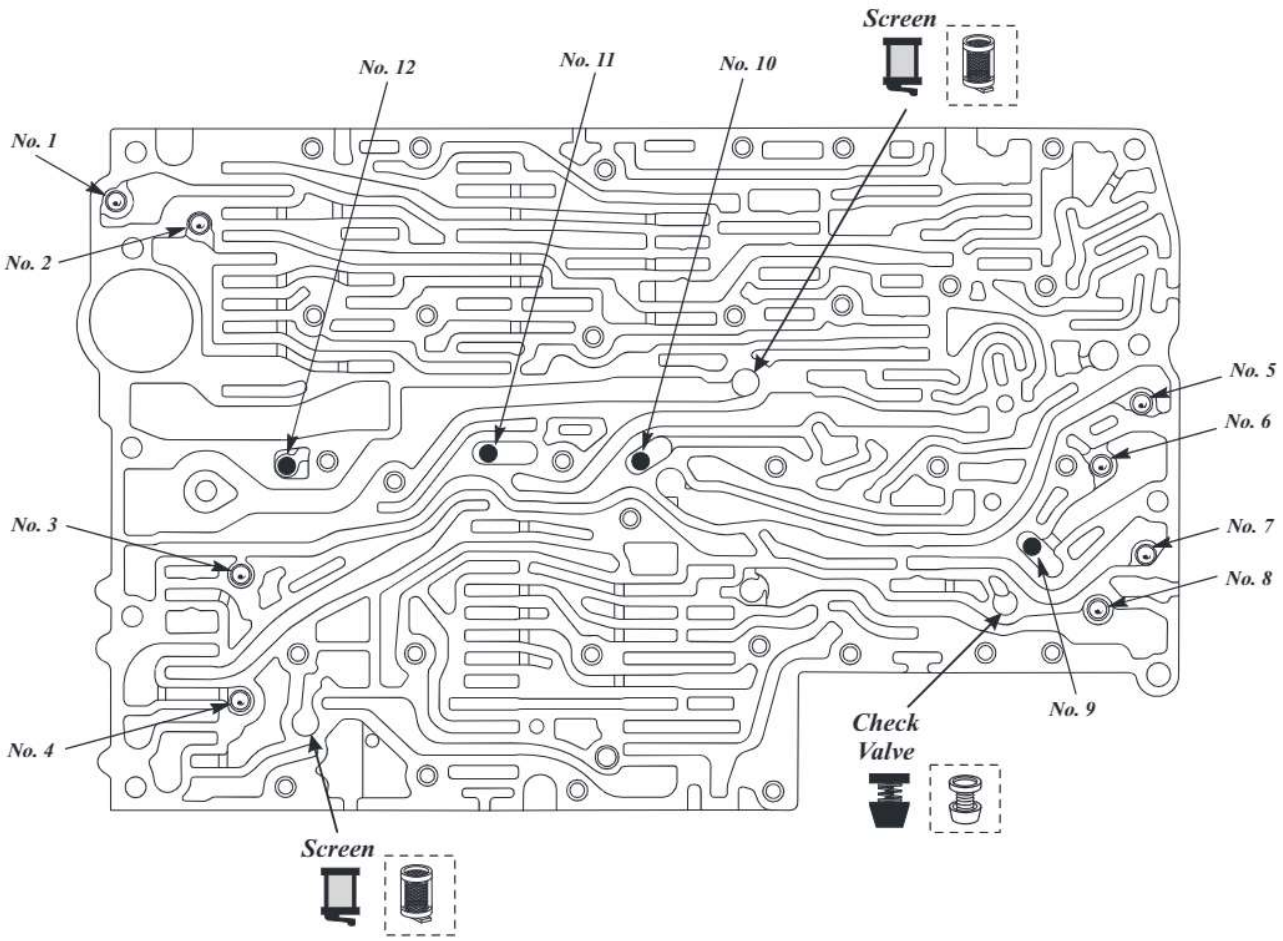

Number	Function	Size	Material
1	K1 Clutch Exhaust	5.4 MM (.215")	Steel
2	B1 Clutch Exhaust	5.4 MM (.215")	Steel
3	K2 Clutch Exhaust	5.4 MM (.215")	Steel
4	Torque Converter Clutch	5.4 MM (.215")	Steel
5	B2 Clutch Exhaust	5.4 MM (.215")	Steel
6	K3 Clutch Exhaust	5.4 MM (.215")	Steel
7	B2 Clutch Counter Exhaust	5.4 MM (.215")	Steel
8	B3 Clutch Exhaust	5.4 MM (.215")	Steel
9	K3 Shuttle Ball	5.4 MM (.215")	Plastic
10	3-4 Shift Group Shuttle Ball	5.4 MM (.215")	Plastic
11	Pressure Reducing Shuttle Ball	5.4 MM (.215")	Plastic
12	Modulator Pressure Shuttle Ball	5.4 MM (.215")	Plastic

Copyright © 2009 ATSG

Figure 173

TRANSMISSION FINAL ASSEMBLY

1. Install the parking gear into the bottom of the case, as shown in Figure 174.
2. Install completed B-2 clutch housing assembly into the case, as shown in Figure 175.
   Note: The feed holes must face the valve body side of the case.
3. Install the two B-2 clutch housing retaining bolts, as shown in Figure 176, and hand tighten only at this time.

Continued on Page 110

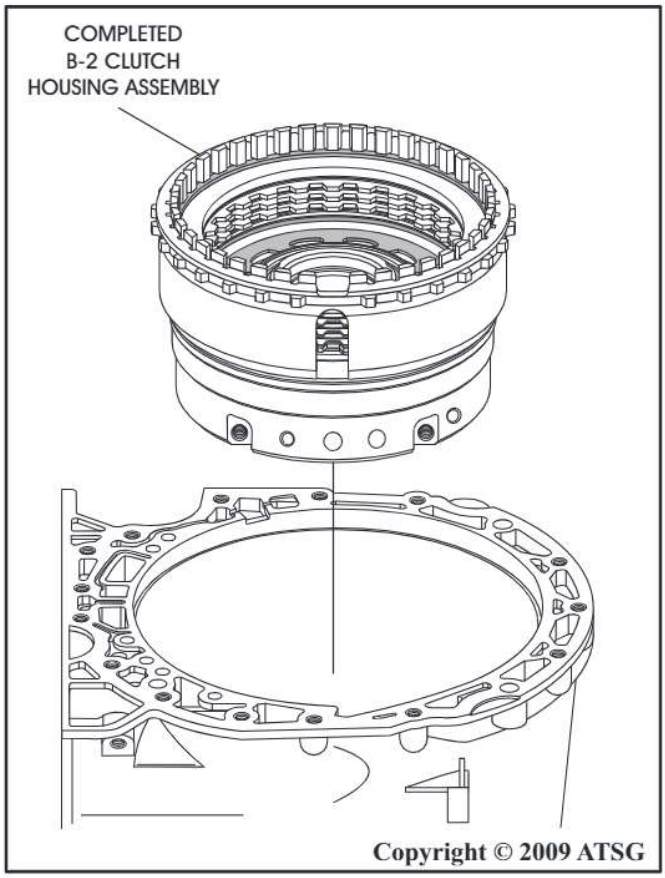

Figure 175

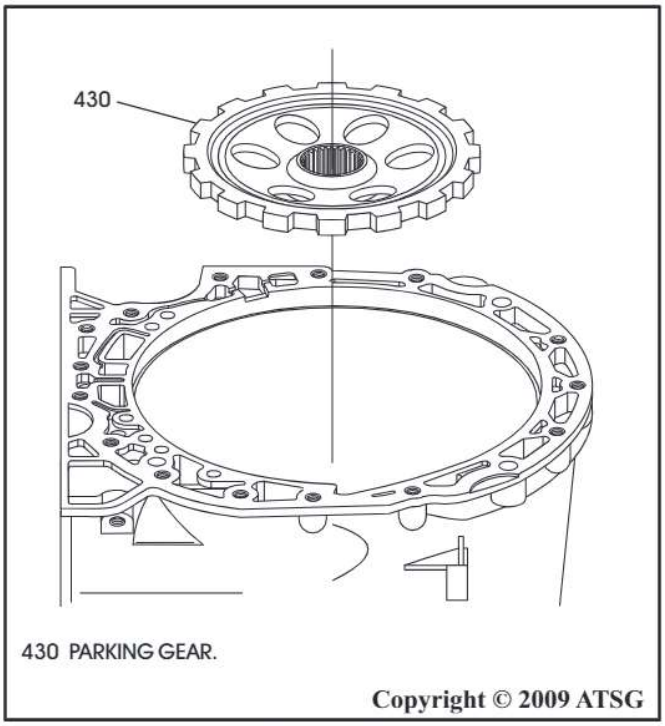

Figure 174

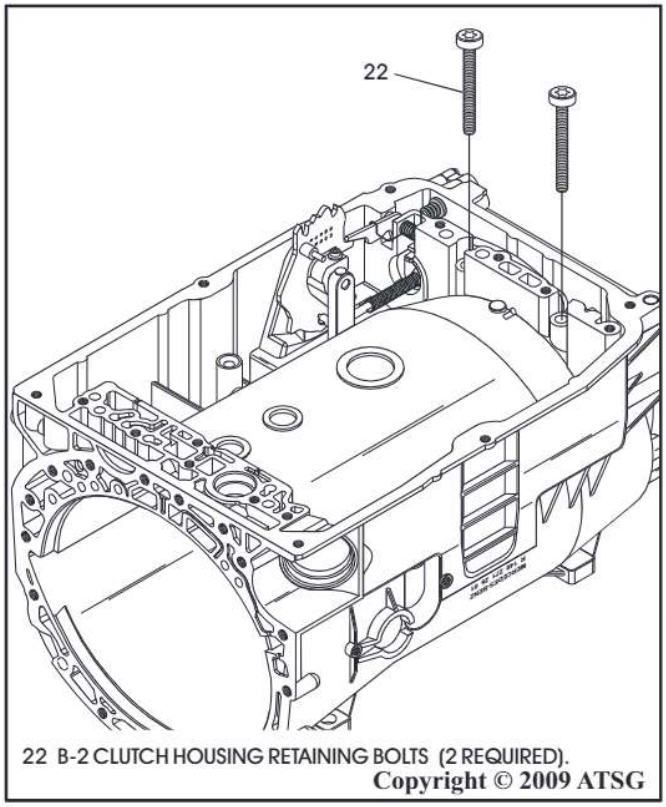

Figure 176

TRANSMISSION FINAL ASSEMBLY (CONT'D)

4. Use caution when installing B-3 clutch plates.
   Caution: The B-3 clutch may have 3, 4, or 5 "double-sided" friction plates depending on the model. Refer to the chart in Figure 177. All friction plates should be soaked in proper fluid for 30 minutes before installation.
5. Install the B-3 clutch dished cushion plate, in the direction shown in Figure 178.
6. Install the B-3 clutch plates beginning with a steel plate and alternating with friction plates, as shown in Figure 178, until you have proper number of plates installed.
   Note: Only one thickness of B-3 steel plate is listed. Number of friction plates controlled by height of B-3 clutch piston.
7. Install the B-3 clutch backing plate, as shown in Figure 178.
8. Install the B-3 clutch *selective* snap ring, as shown in Figure 178.

Continued on Page 111

B-3 CLUTCH QUANTITY CHART BY MODEL

TRANSMISSION MODEL	LINED PLATE	STEEL PLATE	BACK. PLATE	THIN APPLY PLATE
722.600/660	3	2	1	1
722.601/602/603/610	3	2	1	1
722.604/606/609/617	4	3	1	1
722.605/607/608/611/614 618/662/664/699	4	3	1	1
722.665	4	3	1	1
722.620/621/624/626/627 628/630/633/636/666	5	4	1	1
722.622/623/625 631/632/663/669	5	4	1	1
722.629/634/661	5	4	1	1

The number of B-3 friction plates used is model dependant and determined by the backing plate snap ring location and the thickness of the steel plates.

Copyright © 2009 ATSG

Figure 177

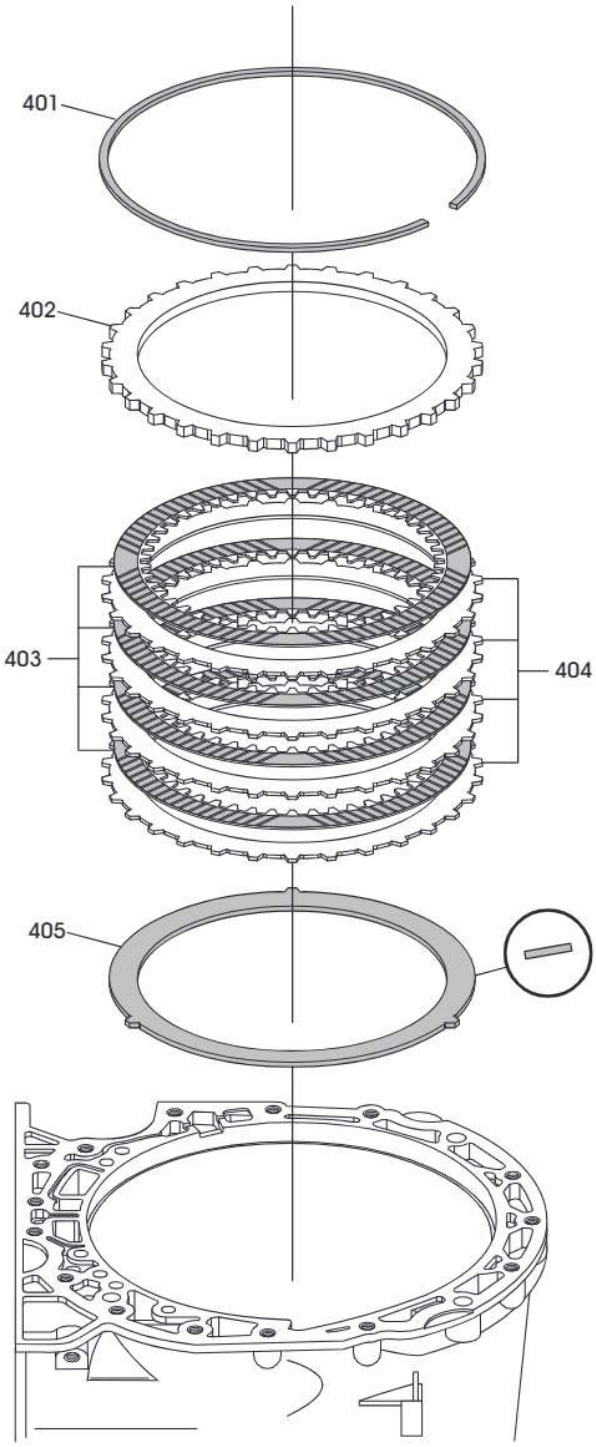

401 B-3 CLUTCH "*SELECTIVE*" SNAP RING.
402 B-3 CLUTCH BACKING PLATE.
403 B-3 CLUTCH FRICTION PLATES (QTY VARIES, SEE CHART).
404 B-3 CLUTCH STEEL PLATES (QTY VARIES, SEE CHART).
405 B-3 CLUTCH DISHED CUSHION PLATE.

Copyright © 2009 ATSG

Figure 178

TRANSMISSION FINAL ASSEMBLY (CONT'D)

9. Measure B-3 clutch clearance using a feeler gauge between the selective snap ring and the backing plate, as shown in Figure 179.
10. B-3 clutch clearance is the same for all models and should be 1.0 - 1.4mm (.039" - .055"), as shown in Figure 179.
11. Change the selective snap ring as necessary to obtain the proper clutch clearance. There are 6 different snap ring thickness' available and are listed in Figure 179.
12. Install the completed center and rear planetary gearset, as shown in Figure 180, by rotating back and forth as you have 2 sets clutches to engage.
13. Slide yoke on the output shaft splines to assist in rotating the assembly, if necessary.
    Note: Ensure number 5 thrust bearing is still in place, as shown in Figure 180. The number 4 thrust bearing race was installed on the K-2 clutch housing.

Continued on Page 112

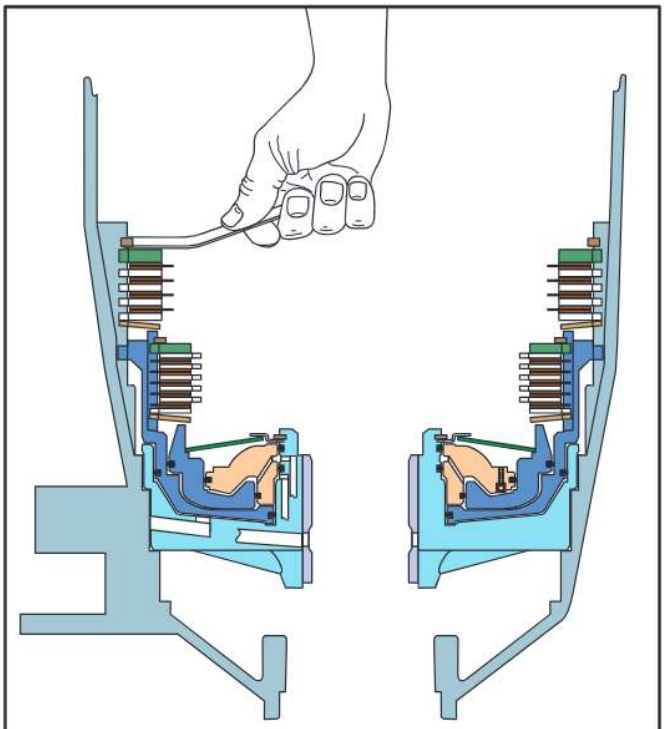

B-3 Clutch Clearance Should Be;
"All Models" 1.0 - 1.4mm (.039" - .055")

B-3 CLUTCH SELECTIVE SNAP RINGS	
THICKNESS	PART NUMBER
3.1 MM (.122")	140 994 15 35
3.4 MM (.134")	140 994 16 35
3.7 MM (.146")	140 994 17 35
4.0 MM (.157")	140 994 41 35
4.3 MM (.169")	140 994 42 35
4.6 MM (.181")	140 994 43 35

Copyright © 2009 ATSG

Figure 179

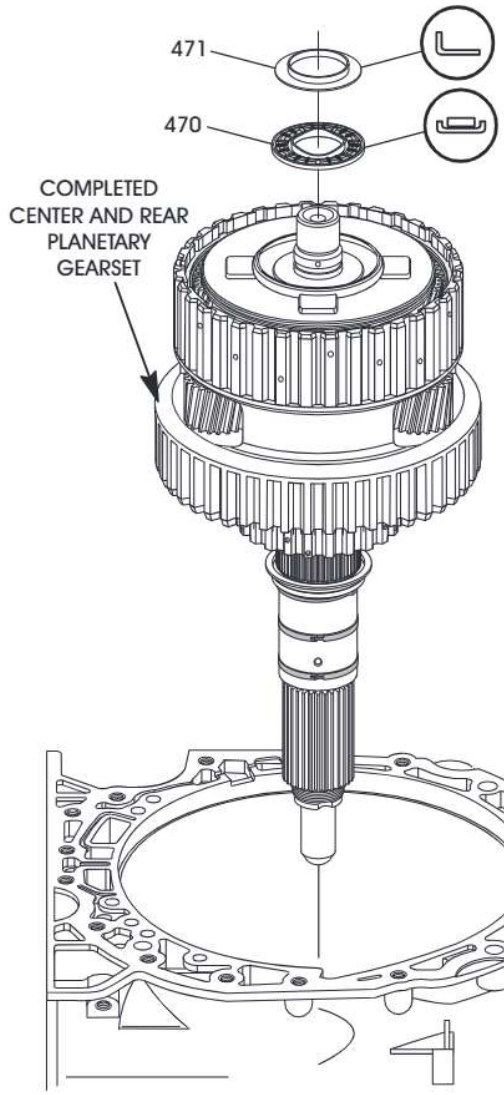

470 NUMBER 5 THRUST BEARING.
471 NUMBER 4 THRUST BEARING RACE.

Copyright © 2009 ATSG

Figure 180

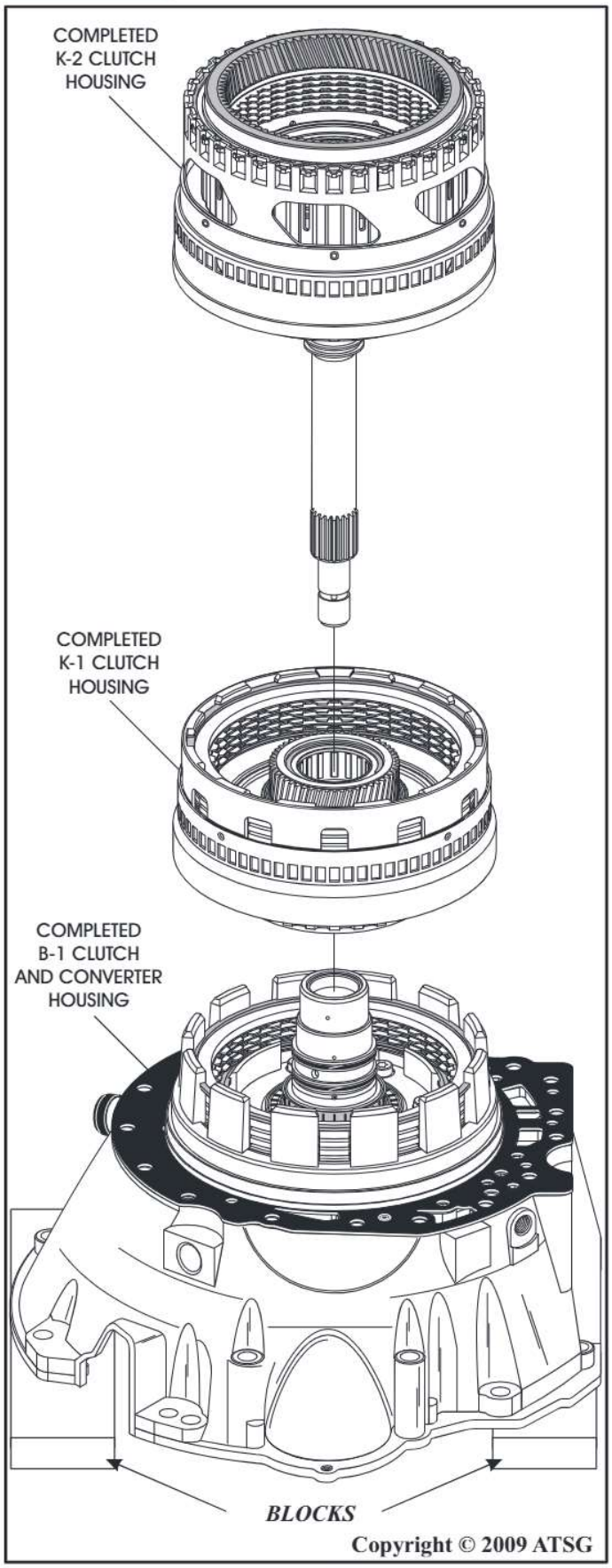

Figure 181

TRANSMISSION FINAL ASSEMBLY (CONT'D)

14. Lay completed converter housing, oil pump and B-2 clutch on work bench face down, as shown in Figure 181, on blocks, as the turbine shaft protrudes past the face of converter housing.
15. Ensure No 2 & 3 thrust bearings are still in place and install completed K-1 clutch housing into the B-1 clutches, as shown in Figure 181, by rotating back and forth until fully seated.
16. Install completed K-2 clutch housing into the K-1 clutches, as shown in Figure 181, by rotating back and forth until fully seated.
    Note: Ensure number 4 thrust bearing race is still stuck to back side of K-2 clutch housing.
17. Gently roll the complete assembly over on the bench and install a small pair of vice grips on the turbine shaft just above the stator, as shown in Figure 182, carefully so as not to damage the turbine splines.

Continued on Page 113

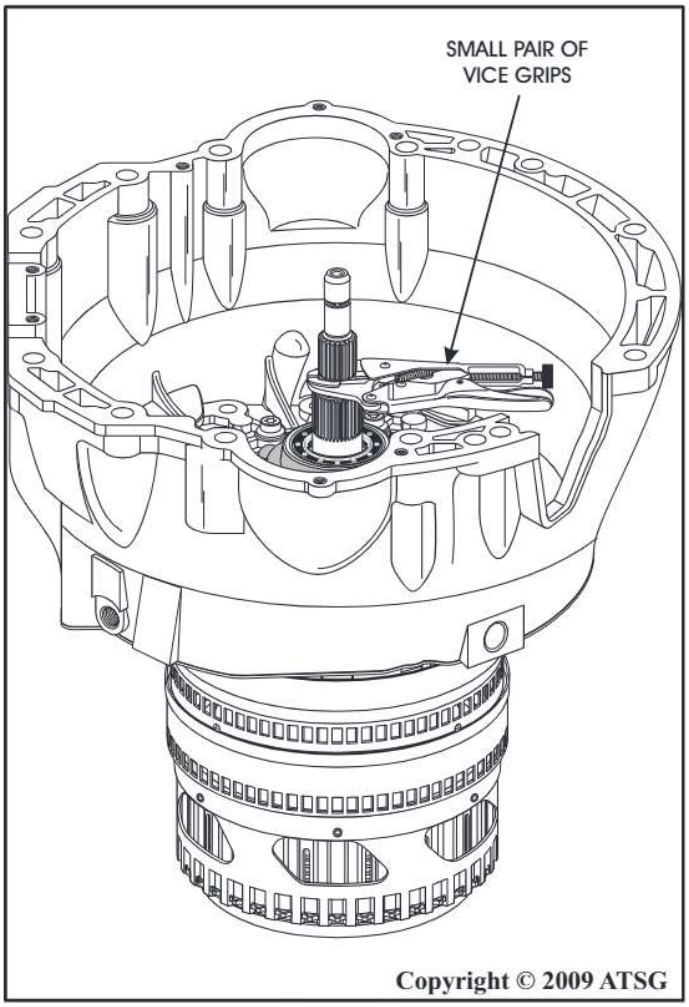

Figure 182

TRANSMISSION FINAL ASSEMBLY (CONT'D)

18. Using a helper if necessary, install the completed assembly into the transmission case, as shown in Figure 183.
19. Rotate the vice grips until fully seated, usually less than 1 turn, and then remove vice grips.
20. Install the 15 required converter housing to case retaining bolts, as shown in Figure 184, torque bolts to 20 N·m (14.7 ft.lb.) (See Figure 185).

Continued on Page 114

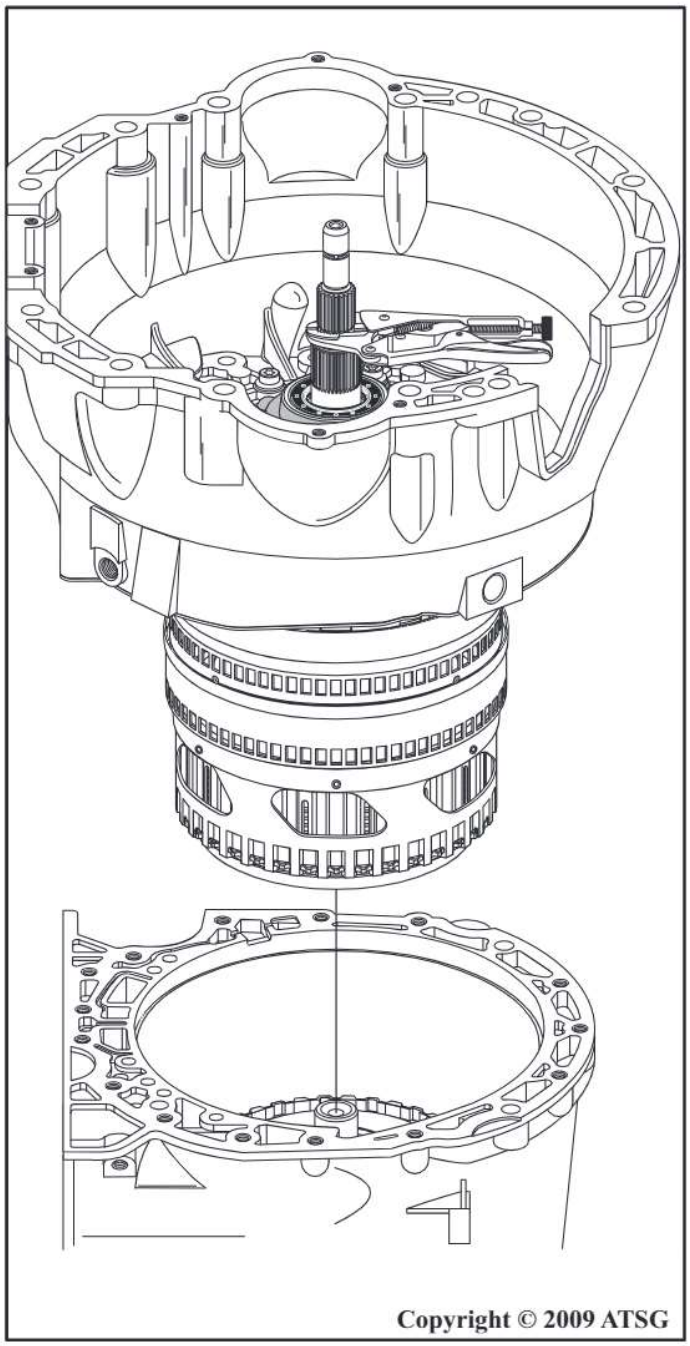

Figure 183

Many thanks to "Dino" of Lee-Myles Transmission for the "Vice-Grip" tip. It works very well.

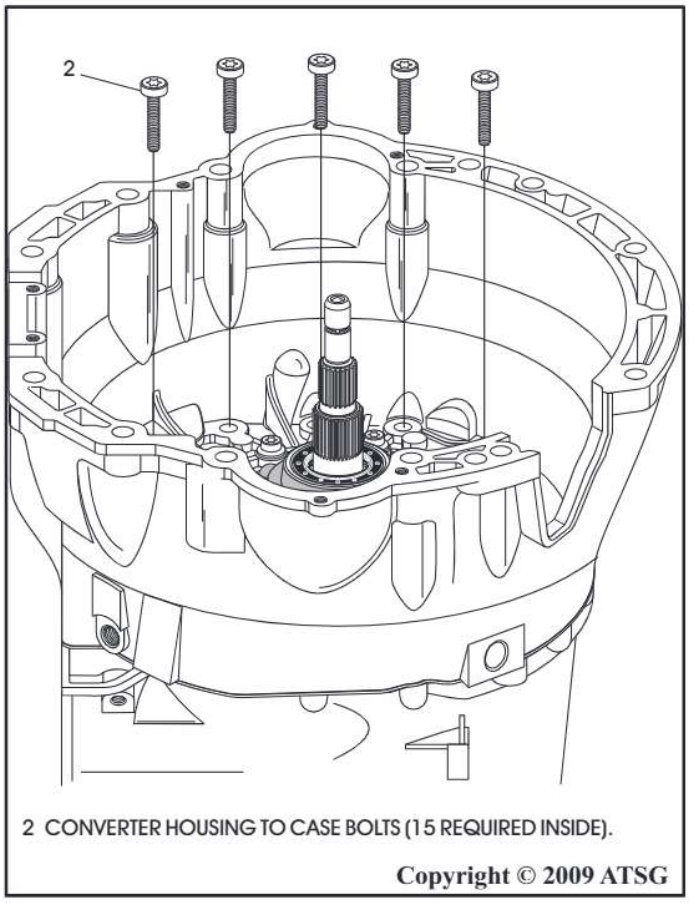

Figure 184

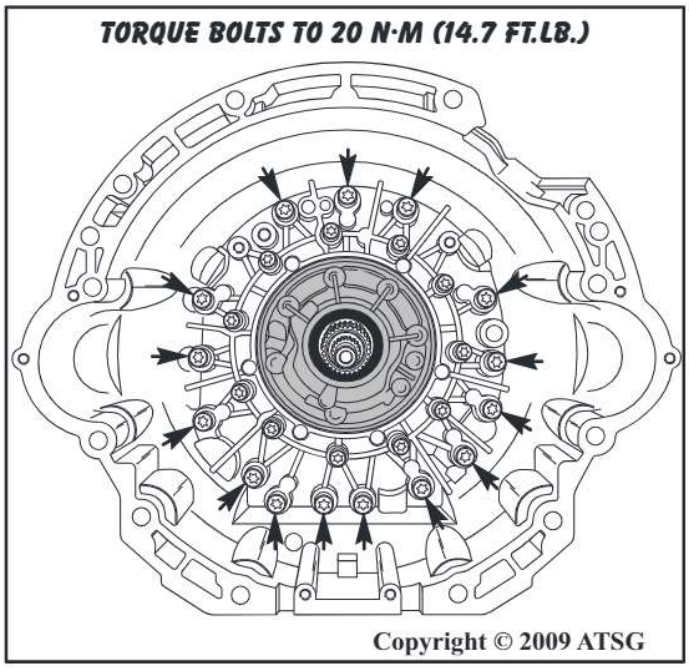

Figure 185

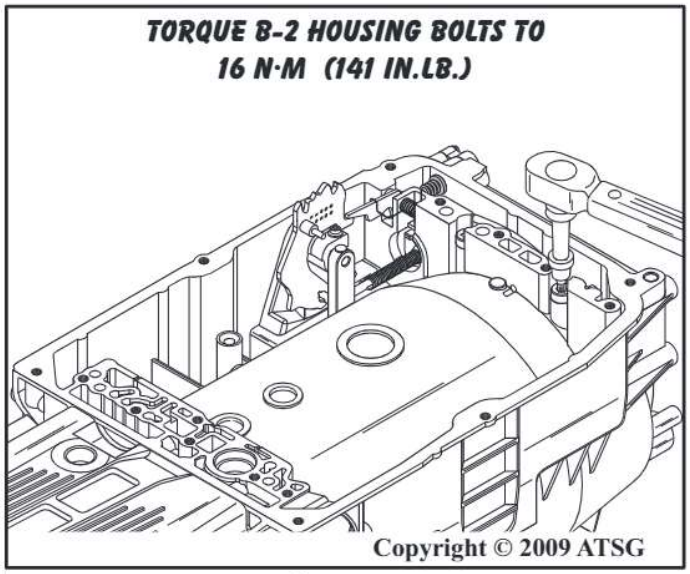

Figure 186

TRANSMISSION FINAL ASSEMBLY (CONT'D)

21. Rotate transmission in fixture so pan surface is facing up, as shown in Figure 186, and torque the B-2 clutch housing retaining bolts to 16 N·m (141 in.lb.).
22. Rotate transmission in fixture so output shaft is facing up, as shown in Figure 187, and ensure transmission is ***not*** in the Park position and no shims installed.
23. Using a cross-bar and dial caliper, measure from the cross-bar to the surface of the hub on parking gear, as shown in Figure 187, and record this as Measurement "A".
24. Measure from the cross-bar to bottom of the ball bearing pocket in case, as shown in Figure 188, and record this as Measurement "B".

Continued on Page 115

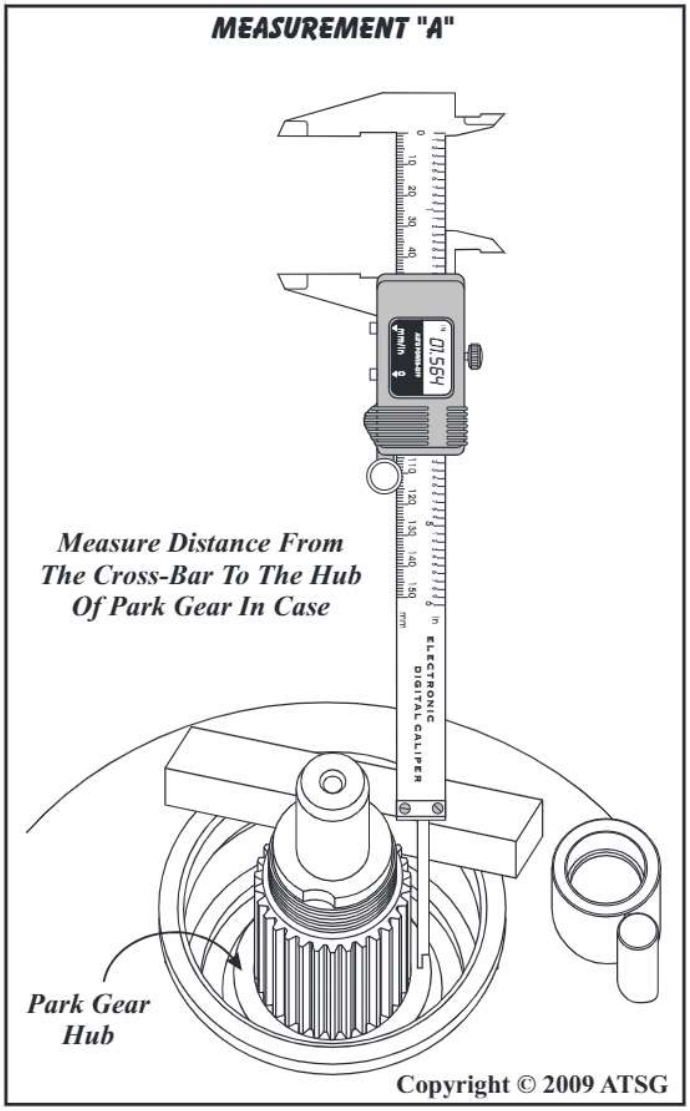

Figure 187

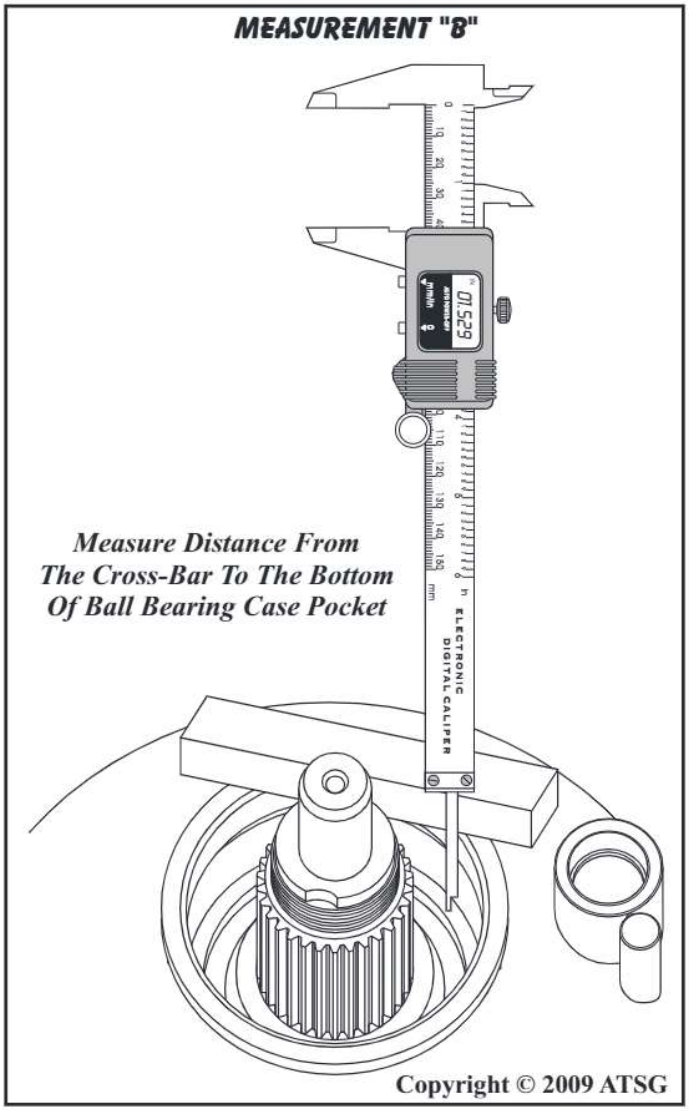

Figure 188

TRANSMISSION FINAL ASSEMBLY (CONT'D)

25. To calulate end-play subtract Measurement "B" from Measurement "A".
    Example:
    Measurement "A" = 39.72mm (1.564")
    Minus
    Measurement "B" = 38.83mm (1.529")
    Equals 0.90mm (.035")

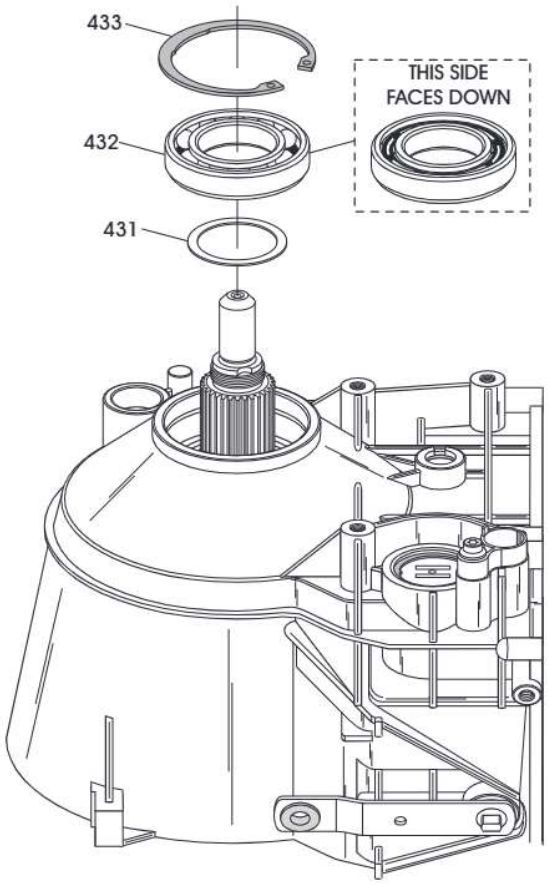

431 PARK GEAR TO REAR BALL BEARING SHIM (END-PLAY).
432 REAR TRANSMISSION BALL BEARING.
433 REAR BALL BEARING RETAINING SNAP RING.

End-Play Clearance Should Be;
0.3 - 0.5mm (.012" - .020")

END-PLAY SELECTIVE SHIMS	
THICKNESS	PART NUMBER
0.2 MM (.008")	140 272 06 52
0.3 MM (.012")	140 272 07 52
0.4 MM (.016")	140 272 08 52
0.5 MM (.020")	140 272 09 52

Copyright © 2009 ATSG

Figure 189

26. End-play must be 0.3-0.5mm (.012"-.020") and you have a measurement of .035" in the example used above, so you will need a 0.5mm (.020") shim to obtain proper end-play 0.4mm (.015").
27. There are 4 different thickness shims available and are listed in Figure 189.
28. Install the proper shim from your calculation, into transmission on top of parking gear hub, as shown in Figure 189.
29. Install ball bearing into transmission housing, as shown in Figure 189.
    Note: The closed side of the plastic cage faces the parking gear, as shown in Figure 189.
30. Install the ball bearing retaining ring and ensure it is properly seated in the groove.
31. Check with a feeler gauge and ensure there is no play between the bearing and snap ring, as shown in Figure 190.
    Note: If the snap ring will not go in, a thinner ring must be used. If there is play between the ring and bearing, a thicker ring must be used.
32. Retaining rings are available in three different thickness' of 2.0mm (.079"), 2.1mm (.083"), and 2.2mm (.087").

Continued on Page 116

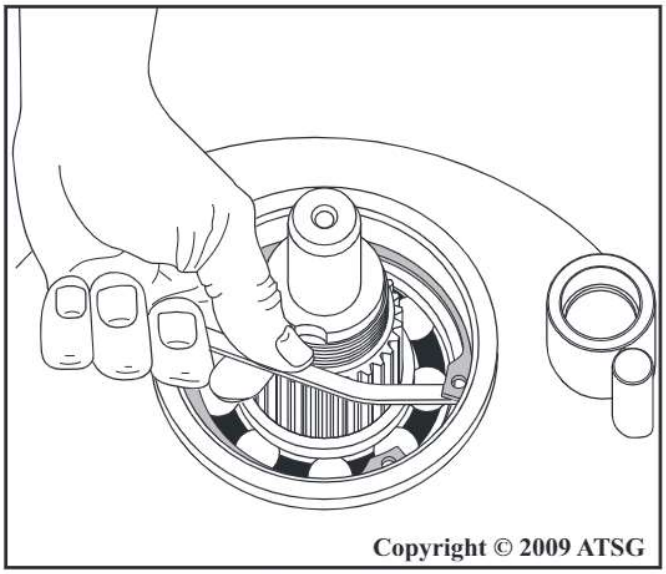

Copyright © 2009 ATSG

Figure 190

TRANSMISSION FINAL ASSEMBLY (CONT'D)

33. Install output shaft washer in transmission, as shown in Figure 191.
34. Install the rear transmission seal, as shown in Figure 191, using proper seal driver.
35. Lubricate the transmission yoke seal surface with a small amount of Trans-Jel®, and install yoke, as shown in Figure 191.
36. Place the transmission in the Park position and install the nut, as shown in Figure 191, using a 30mm 12 point socket.
37. Torque the nut to 200 N·m (147.5 ft.lb.), and stake shoulder of the nut into key slot of output shaft using a small punch.
38. Install the two case to converter housing bolts and torque to 20 N·m (14.7 ft.lb.), as shown in Figure 192.
39. Rotate transmission, install dial indicator and verify transmission the end-play, as shown in Figure 193.

Continued on Page 117

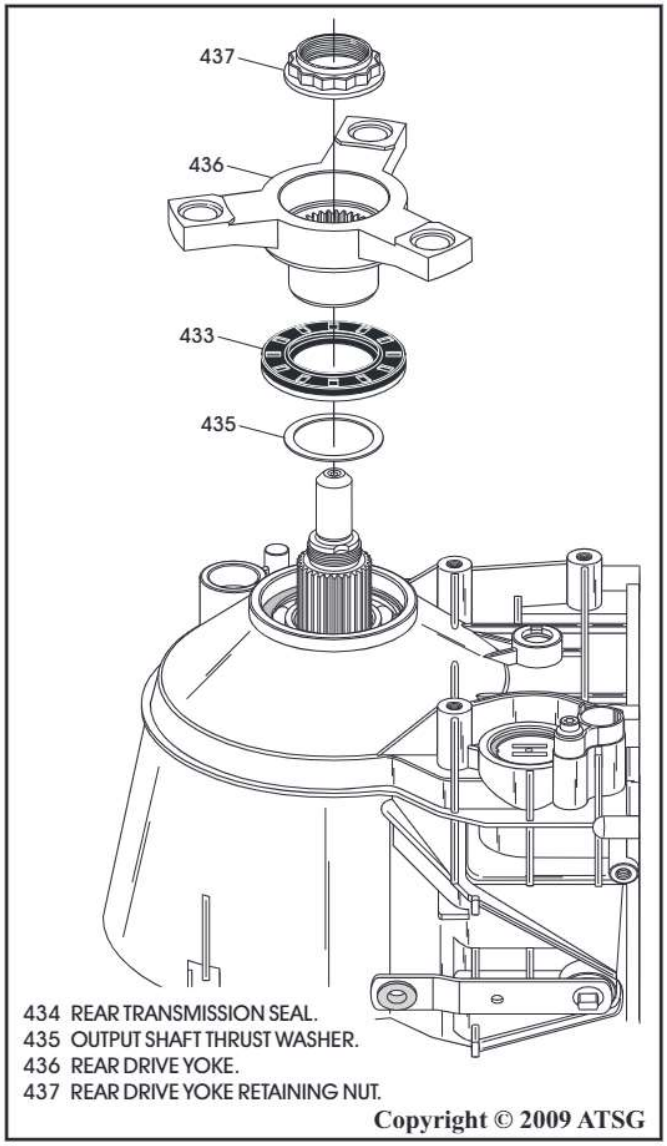

Figure 191

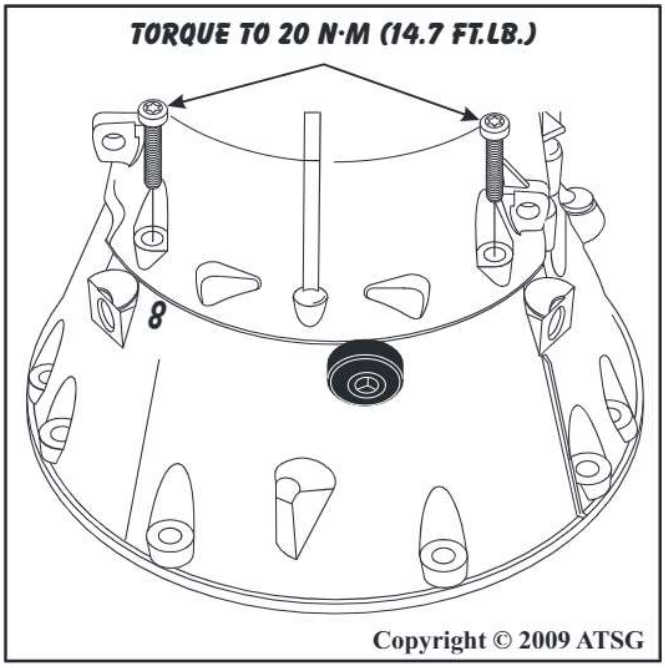

Figure 192

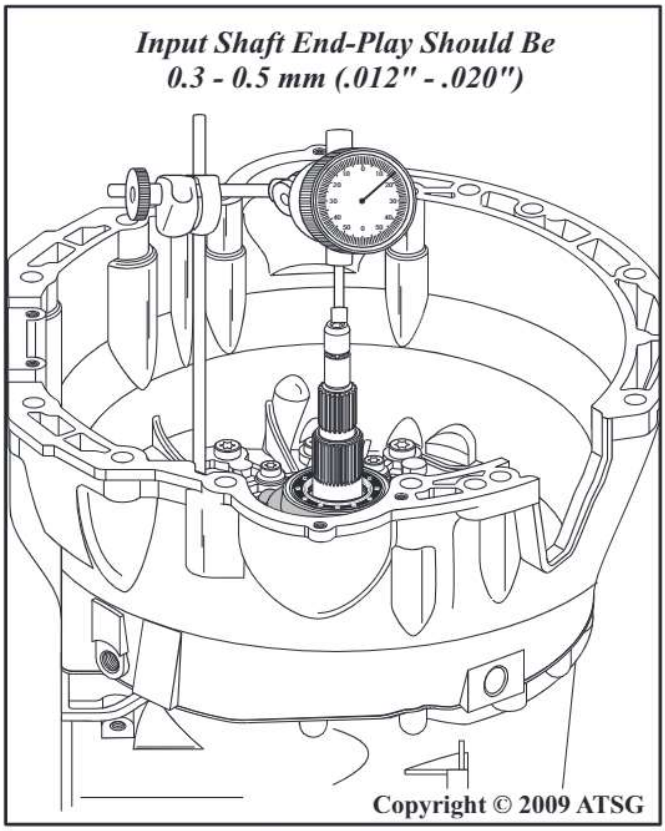

Figure 193

TRANSMISSION FINAL ASSEMBLY (CONT'D)

40. Rotate transmission so that the pan surface is facing up, as shown in Figure 194.
41. Install the completed valve body assembly, as shown in Figure 194.
    Note: Ensure manual valve engages on the detent lever pin (See inset Figure 194).
42. Install the ten valve body retaining bolts, as shown in Figure 194, and torque valve body bolts and the inside detent spring bolt to 8 N·m (71 in.lb.).
43. Install new "O" rings on the conductor plate sealing sleeve, as shown in Figure 194.
    Note: There have been several changes to the "O" rings for leakage concerns. The latest version is White in color.
44. Install the conductor plate sleeve, as shown in Figure 194, and tighten the 7mm brass screw.
45. Install new "O" ring seal on the oil filter neck, lube with small amount of Trans-Jel® and install oil filter, as shown in Figure 195.
    Note: Ensure the oil filter is fully seated, as it goes through valve body and into the case.

Continued on Page 118

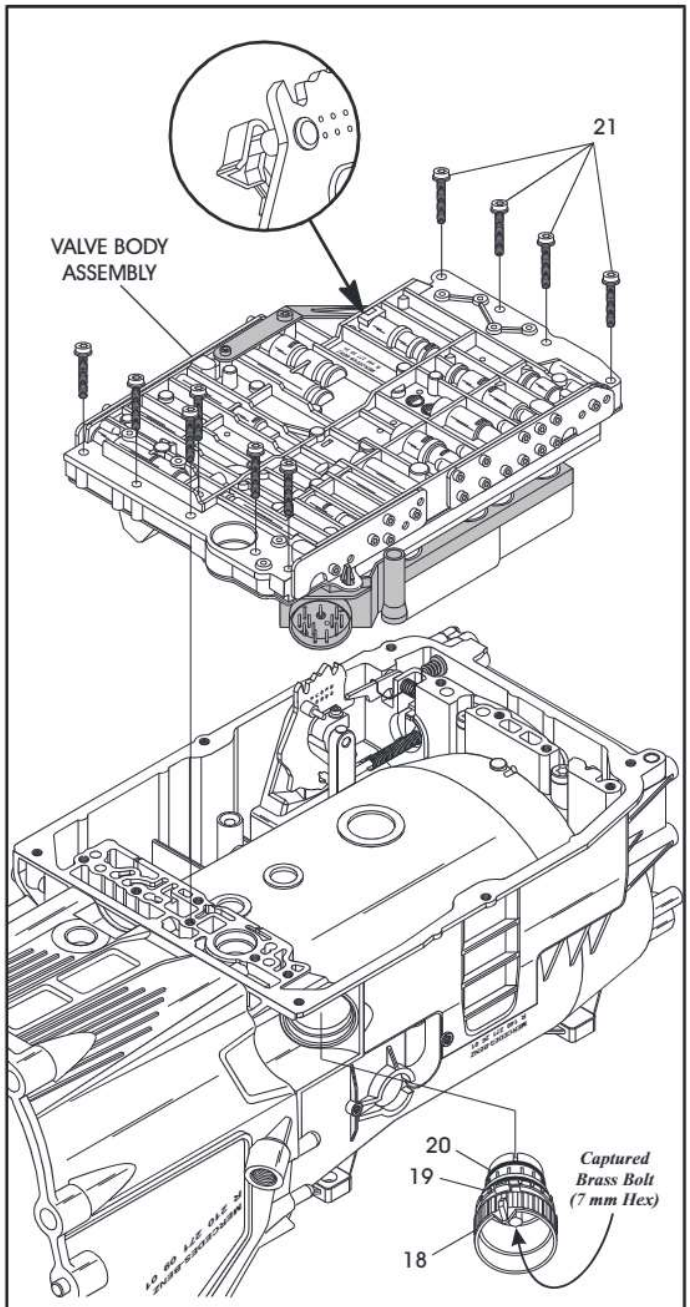

18 CASE TO ELECTRICAL CONDUCTOR PLATE SEALING SLEEVE.
19 CASE SLEEVE LARGE "O" RING SEAL..
20 CASE SLEEVE SMALL "O" RING SEAL.
21 VALVE BODY RETAINING BOLTS (10 REQUIRED).

Copyright © 2009 ATSG

Figure 194

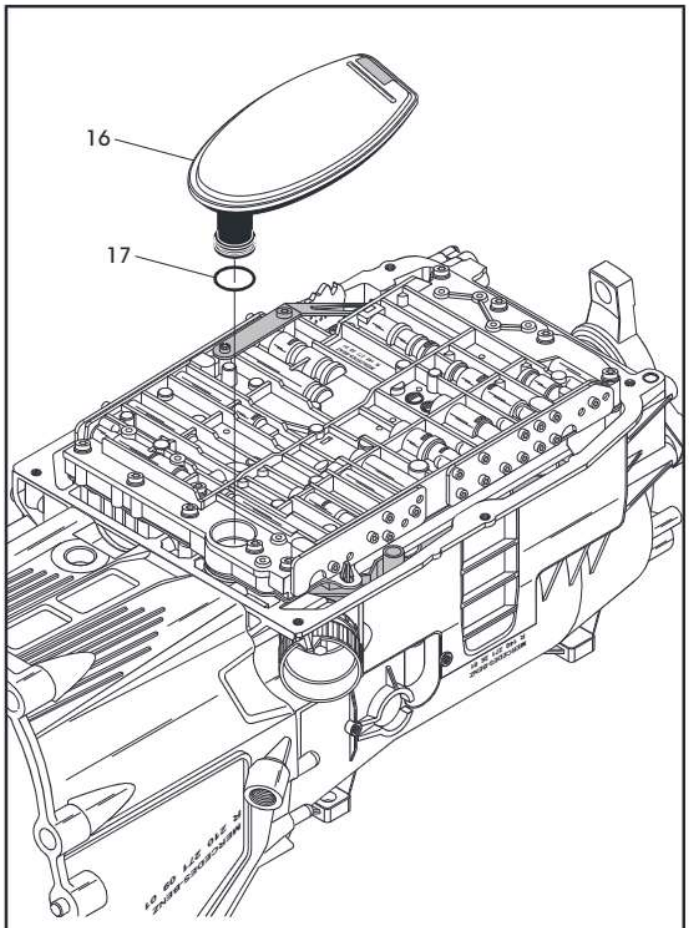

16 OIL FILTER ASSEMBLY.
17 OIL FILTER NECK "O" RING SEAL.

Copyright © 2009 ATSG

Figure 195

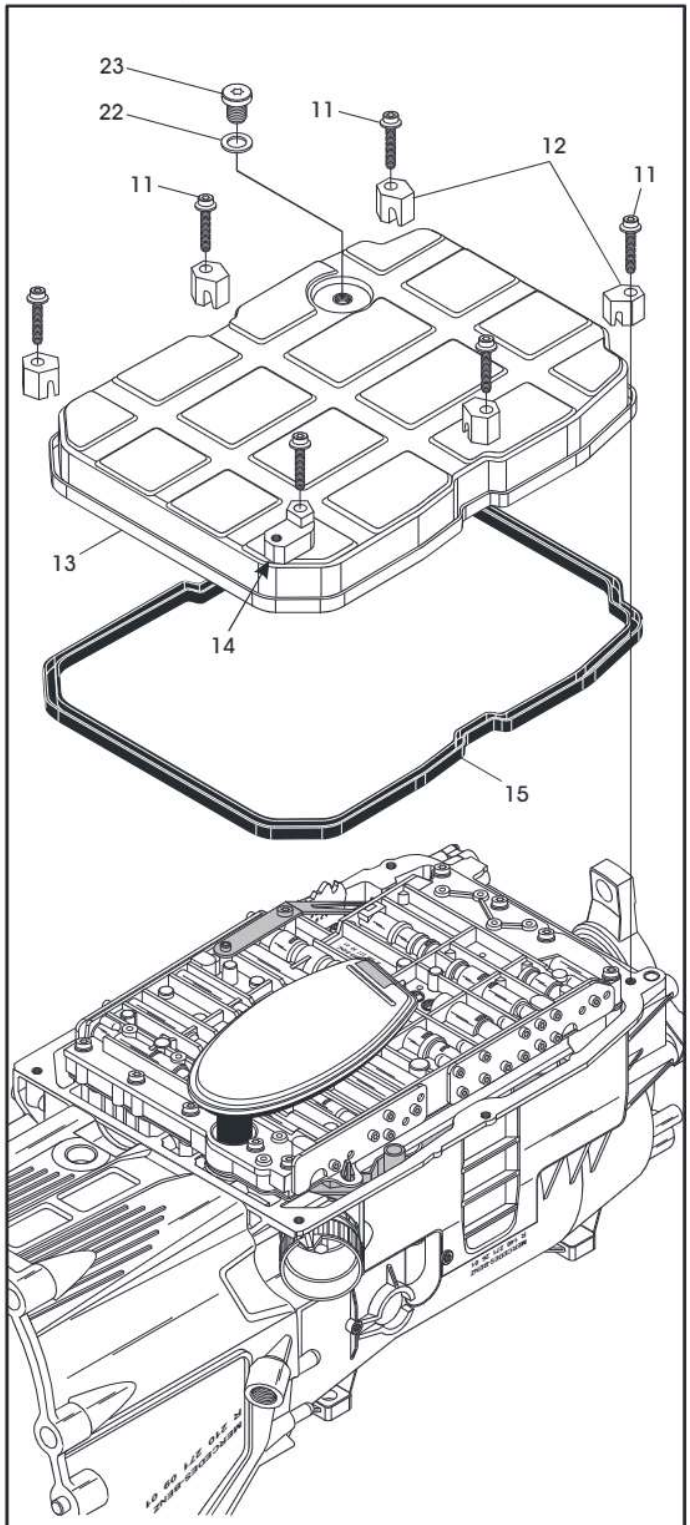

11 OIL PAN RETAINING BOLTS (6 REQUIRED).
12 OIL PAN SPACER/CLAMP (5 REQUIRED).
13 OIL PAN.
14 OIL PAN SPACER/CLAMP WITH BRACKET (1 REQUIRED).
15 OIL PAN TO CASE RUBBER GASKET SEAL.
22 OIL PAN DRAIN PLUG GASKET.
23 OIL PAN DRAIN PLUG.

Copyright © 2009 ATSG

Figure 196

TRANSMISSION FINAL ASSEMBLY (CONT'D)

46. Install new gasket on the oil pan drain plug, as shown in Figure 196, install the drain plug and torque to 20 N·m (14.7 ft.lb.).
47. Install a new gasket to the oil pan, as shown in Figure 196, and install oil pan onto transmission.
48. Install the 6 spacers and their bolts, as shown in Figure 196.
    Note: 1 of the spacers has a tab with a threaded hole, for the external heat shield and goes directly above the case connector sleeve.
49. Torque all oil pan retaining bolts, as shown in Figure 197, to 8 N·m (71 in.lb.).

Continued on Page 119

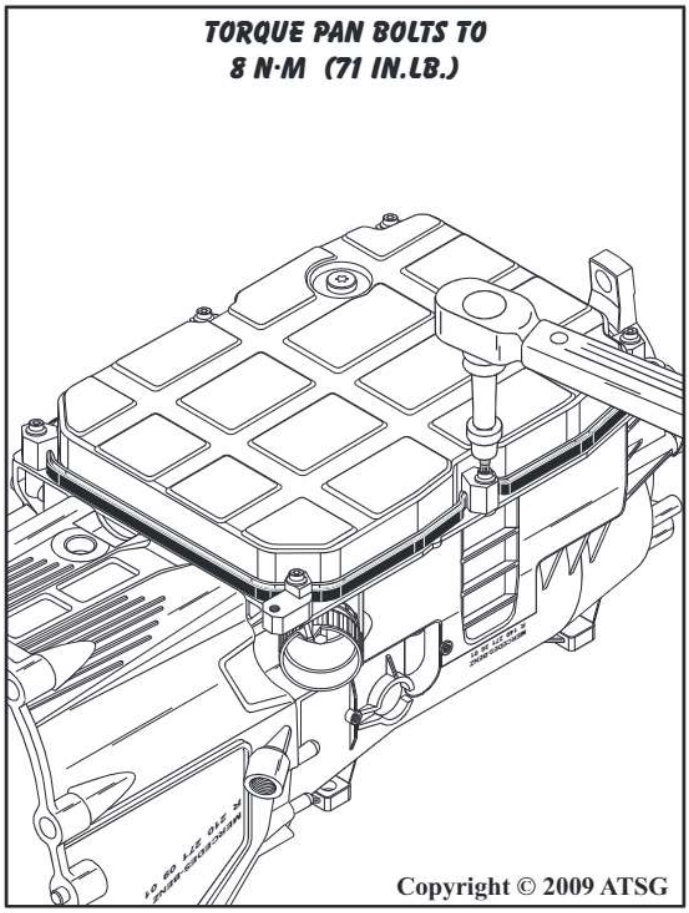

Copyright © 2009 ATSG

Figure 197

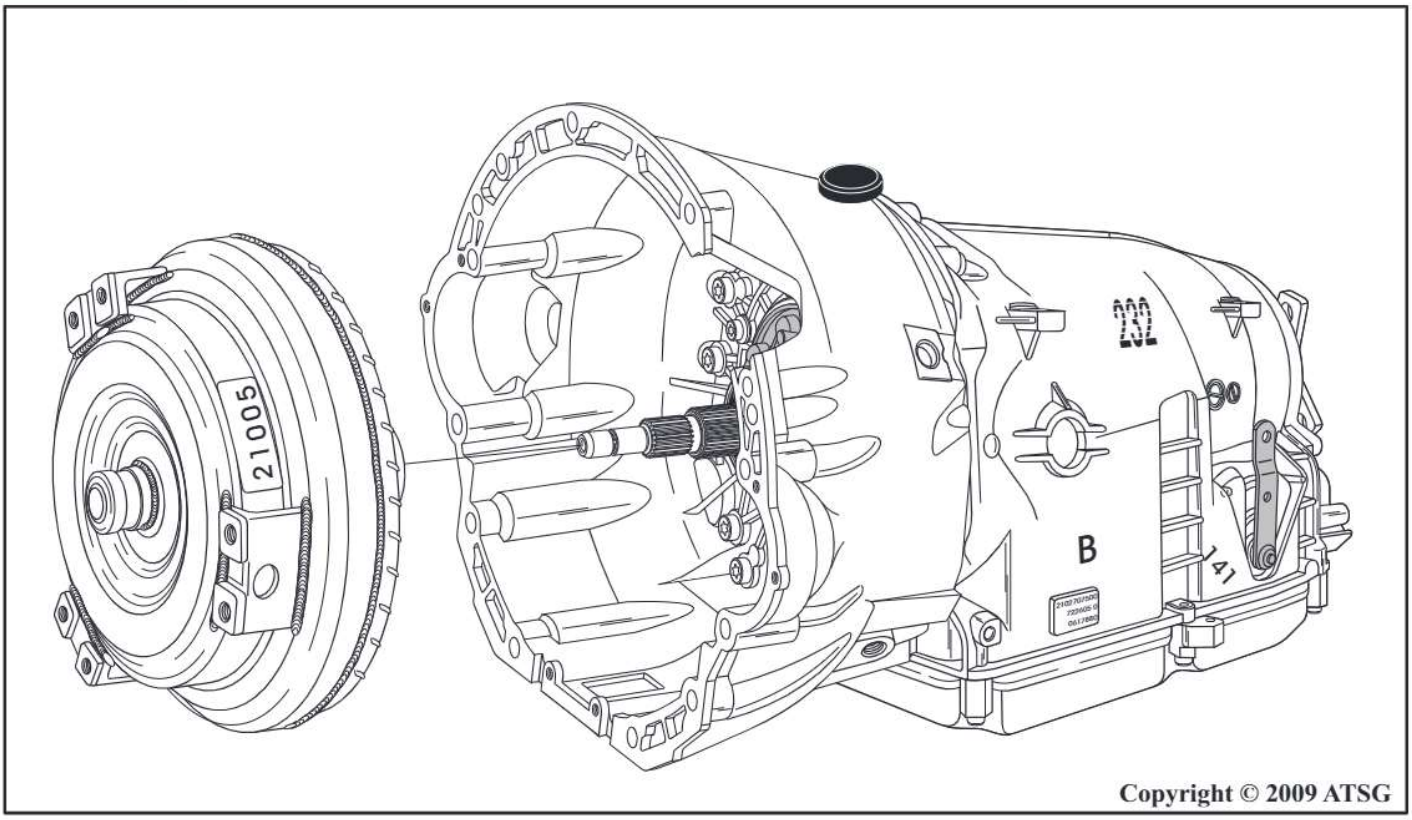

Figure 198

TRANSMISSION FINAL ASSEMBLY (CONT'D)

50. Lubricate the outside diameter of the converter hub with small amount of Trans-Jel®, and install torque converter, as shown in Figure 198.
51. Measure distance "A" from the torque converter pad to the face of converter housing, as shown in Figure 199.
52. If converter is properly installed, distance "A" will be 55mm (2.17 inch).

CONGRATULATIONS
YOU ARE FINISHED!

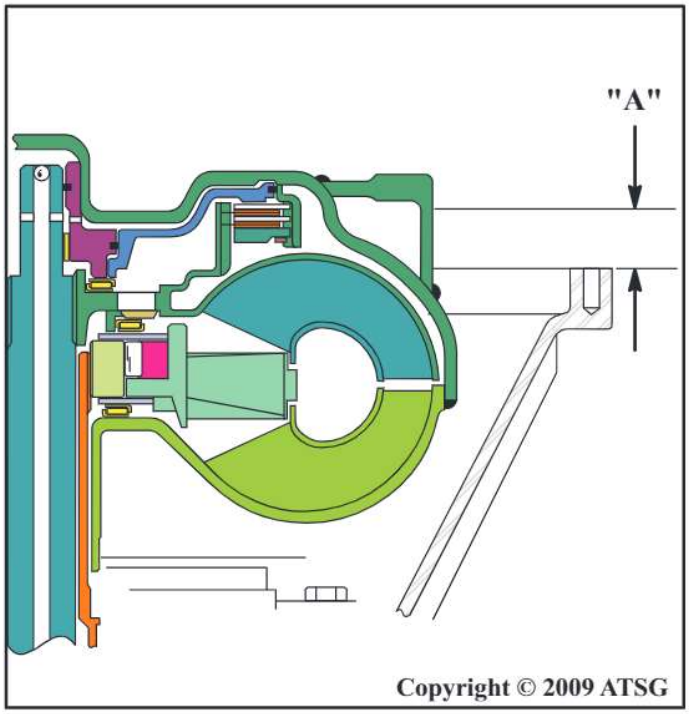

Figure 199

TORQUE SPECIFICATIONS			
Component	N•m	Ft.Lb.	In.Lb.
Converter Housing to Case	20	14.7	
Converter Housing to B-1 Clutch Housing	10		88
B-1 Clutch Housing to Pump Body	20	14.7	
Valve Body and Solenoid Bolts	8		71
Valve Body Cover Bolts	4		35
Inside Detent Spring to Valve Body	8		71
Inside Detent Lever Linkage	8		71
Valve Body to Case Bolts	8		71
Case To B-2 Clutch Housing	16		141
Transmission Rear Yoke Nut	200	147.5	
Oil Pan Drain Plug	20	14.7	
Oil Pan to Case	8		71
Transmission to Engine Bolts	38	28	
Torque Converter to Drive Plate	50	37	

Copyright © 2009 ATSG

Figure 200

We wish to send out a hearty "Thank You" to
Rich Varhan at European Transmission Exchange
for supplying the transmission that made this manual possible.

Copyright © 2009 ATSG