INTRODUCTION

Published
January 2017

AUDI/BMW/DODGE/JEEP
ZF8HP45/55/70/90

The ZF8HP transmission will be found in Chrysler, Dodge and Jeep vehicles, both two wheel drive and four wheel drive applications. The ZF8HP45 is typically fitted behind 3.0L and 3.6L engines while the ZF8HP70 is powered by 5.7L or 6.4L engines. SRT 707-hp 6.2L Hellcat V8 engines will drive a ZF8HP90 transmission due to the increase in torque. Variants of this transmission will also be found in Audi, Rolls-Royce, Bentley, Maserati and BMW 1, 3, 5 and 7 series vehicles.

No part of any ATSG publication may be reproduced, stored in any retrieval system or transmitted in any form or by any means, including but not limited to electronic, mechanical, photocopying, recording or otherwise, without ***written*** permission of Automatic Transmission Service Group. This includes all text illustrations, tables and charts.

Disclaimer: Manufacturer's procedures and specifications are provided in this manual. Torque specifications provided for aluminum bolts are given for new aluminum bolts. At the time of printing, a source for these aluminum bolts was not yet available. The same is so for end play adjusting shims. Check with your local supplier or dealer for availability.

The information and part numbers contained in this booklet have been carefully compiled from industry sources known for their reliability, but ATSG does not guarantee its accuracy.

Copyright © ATSG 2017

We thank Transtec and Worldwide for providing transmissions to ATSG making this manual possible

AUTOMATIC TRANSMISSION SERVICE GROUP
18635 SW107th AVENUE
CUTLER BAY, FLORIDA 33157
(305) 670-4161
www.atsg.com

AUDI/DODGE/JEEP
ZF8HP45/55/70

INDEX

Introduction..... 3
Component Application Chart..... 4
Planetary Noise Diagnostic Chart..... 5
Decoupling Operation..... 6
Typical Wire Diagram..... 8
Solenoid Information..... 10
E-Shift Park Release Operation..... 18
ZF8HP55 External Disassembly..... 19
ZF8HP45 External Disassembly..... 29
Transmission Internal Disassembly..... 34
A Brake Disassembly..... 41
E Clutch Disassembly..... 45
C Clutch Disassembly..... 46
D Clutch Disassembly..... 47
Valve Body Disassembly, ZF8HP45 and ZF8HP55 Information and Reassembly..... 49
ZF8HP45 Park Hydraulic Schematic..... 69
D Clutch Rebuild..... 70
C Clutch Rebuild..... 74
E Clutch Rebuild..... 77
A and B Brake Rebuild..... 80
Brake and Clutch Specifications and Adjustment Procedures..... 86
Pump Assembly Rebuild..... 90
Transmission Internal Reassembly..... 94
ZF8HP45 External Reassembly..... 99
ZF8HP45 Case Passage Identification..... 105
ZF8HP45 Fluid Specification..... 109
ZF8HP55 External Reassembly..... 110
ZF8HP55 Case Passage Identification..... 111
ZF8HP55 Fluid Specification..... 121
Special Service Tools..... 122
Chrysler Corporation DTCs..... 127

AUTOMATIC TRANSMISSION SERVICE GROUP
18635 SW 107th AVENUE
CUTLER BAY, FLORIDA 33157
(305) 670-4161

Copyright © ATSG 2017

MANUAL INTRODUCTION

ZF8HP55

This ZFHP55 was provided by Worldwide Transmission Parts in Chicago Illinois

ZF8HP45/70/90

This ZFHP45 was provided by Corteco - Transtec Milan Ohio

ZF8HP Series Transmissions: 8HP45 / 8HP55 / 8HP70 / 8HP90 - (Variation 845RE / 870RE)

Applications: Audi Q5, Q7, A8 and A8L, BMW 1, 3, 5 and 7 series, Chrysler 300, Dodge Charger and Durango, Ram 1500, Jeep G Cherokee, Range Rover, Rolls-Royce and Bentley.

The ZF8HP transmission uses four single planetary gear sets to produce 8 forward speeds and reverse. These gear sets are connected to five clutch assemblies (shift elements). Two of which are multi-disc brake type clutch assemblies and three which are driving type multi-disc clutch assemblies. Reducing drag, these clutch assemblies are arranged in such a manner that three clutch assemblies need to be applied (closed) while two remain released (open) for each gear.

The valve body and solenoids are joined together with the electronic transmission control (EGS) referred to as the Mechatronic Assembly. All of which is designed to transfer more torque to the wheels while simultaneously increasing efficiency.

Due to the notable differences in the construction of the ZF8HP45/70/90 transmission and the AWD ZF8HP55 transmission, this manual will provide the disassembly, reassembly procedures for both. The ZF8HP45 transmission from a Dodge Truck will be used dominantly throughout the manual of the disassembly, inspection and rebuild of individual sub-components since all versions are quite similar. The exception to this is the valve body. The ZF8HP55 is entirely different. Through collaboration with Sonnax Industries, the differences between these two valve bodies are provided in this manual as well.

We thank Transtec for providing to ATSG the ZF8HP45 Transmission and we thank Worldwide Transmission Parts in Chicago for providing the ZF8HP55 Transmission making this manual possible.

Copyright © 2017 ATSG

Figure 1

ZF8HP45 CUT AWAY VIEW

COMPONENT APPLICATION CHART

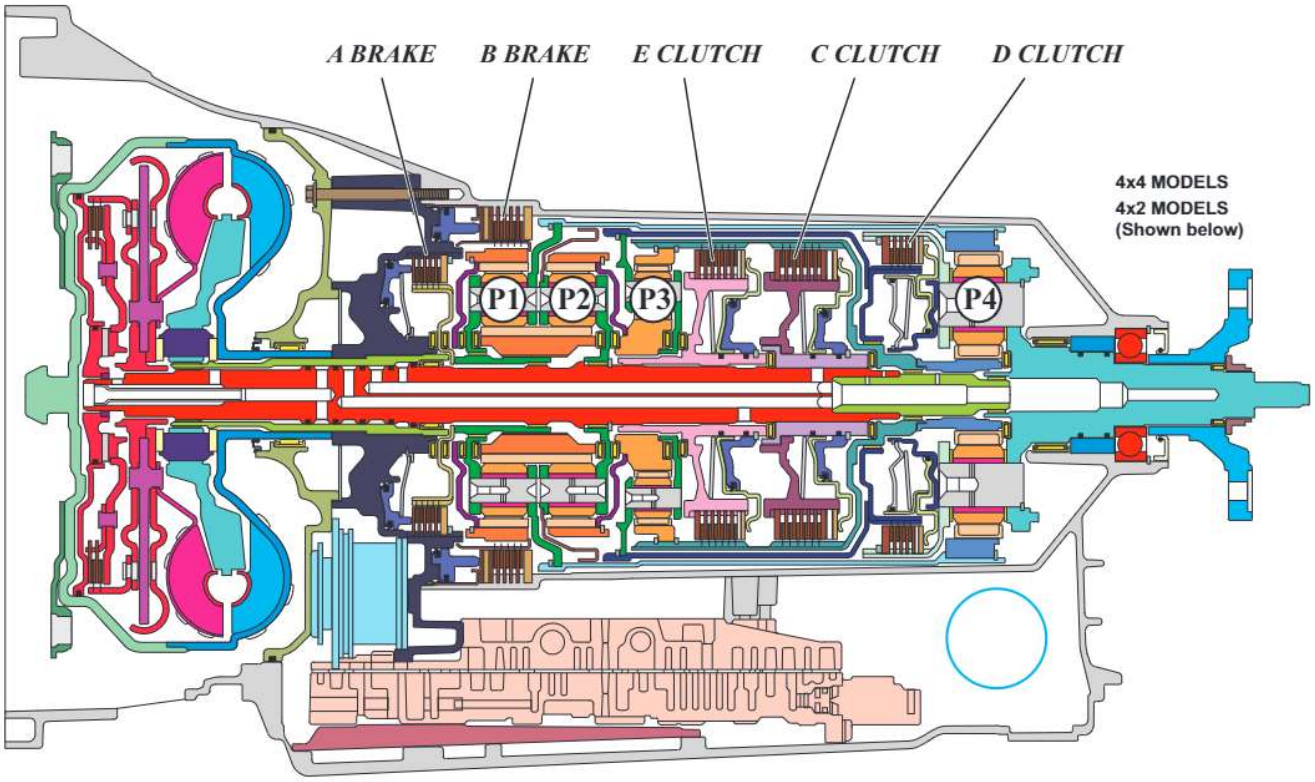

ZF8HP45 CLUTCH APPLICATION CHART

CLUTCH / RANGE	A BRAKE	B BRAKE	C CLUTCH	D CLUTCH	E CLUTCH	TCC CLUTCH	GEAR RATIO
P	Applied	Applied					
R	Applied	Applied		Applied			3.30
N	Applied	Applied					
D-1st.	Applied	Applied	Applied			Applied*	4.71
D-2nd.	Applied	Applied			Applied	Applied*	3.14
D-3rd.		Applied	Applied		Applied	Applied*	2.10
D-4th.		Applied		Applied	Applied	Applied*	1.67
D-5th.		Applied	Applied	Applied		Applied*	1.29
D-6th.			Applied	Applied	Applied	Applied*	1.00
D-7th.	Applied		Applied	Applied		Applied*	0.84
D-8th.	Applied			Applied	Applied	Applied*	0.67

1. TCC operation available in gears 1 through 8, dependant upon throttle position, transmission fluid temperature and vehicle speed. Uses a 235 Torsional Turbine Damper fully lockable, 40rpm max slip.
2. Failsafe is 6th gear
3. The B Brake is partially applied when stand still decoupling is activated

Copyright © 2017 ATSG

Figure 2

ZF8HP PLANETARY GEAR SETS

4 PLANETARY NOISE DIAGNOSIS

GEAR	GEAR SET 1 (P1)	GEAR SET 2 (P2)	GEAR SET 3 (P3)	GEAR SET 4 (P4)	OUTPUT RATIO
1st Gear	Stationary	Ineffective	Ineffective	4.714	4.714
2nd Gear	Stationary	0.667	Ineffective	4.714	3.143
3rd Gear	3.000	1.000	Ineffective	2.106	2.106
4th Gear	3.000	0.556	1.000	1.000	1.667
5th Gear	3.000	0.464	1.285	1.285	1.285
6th Gear	1.000	1.000	1.000	1.000	1.000
7th Gear	Ineffective	0.670	0.839	Ineffective	0.839
8th Gear	Ineffective	0.670	1.000	Ineffective	0.670
Reverse	Stationary	0.670	-1.046	4.714	-3.289

Planetary Details:

Gear sets listed above are in order from the front of the transmission to the rear of the transmission. P represents "planetary" or "gear set. " A gear set consists of an annulus (ring) gear, a carrier with pinion gears and a sun gear.

1. The Input Shaft drives the P2 carrier and C clutch housing
2. The A brake holds the P1 and P2 sun sears stationary
3. The B brake holds the P1 annulus gear stationary
4. The C clutch drives the P3 annulus gear, the P4 sun gear and the E clutch housing
5. The D clutch connects the P3 carrier with the P4 carrier
6. The E clutch connects the P2 annulus gear to the P3 sun gear
7. The P4 annulus gear is connected to the P1 carrier via the P4 annulus drum (*the long outer cylindrical drum with holes roundabout*)
8. The D clutch drum is integral to the P4 carrier, park gear and output shaft

Copyright © 2017 ATSG

Figure 3

B BRAKE OPERATION

DECOUPLING AT STAND STILL

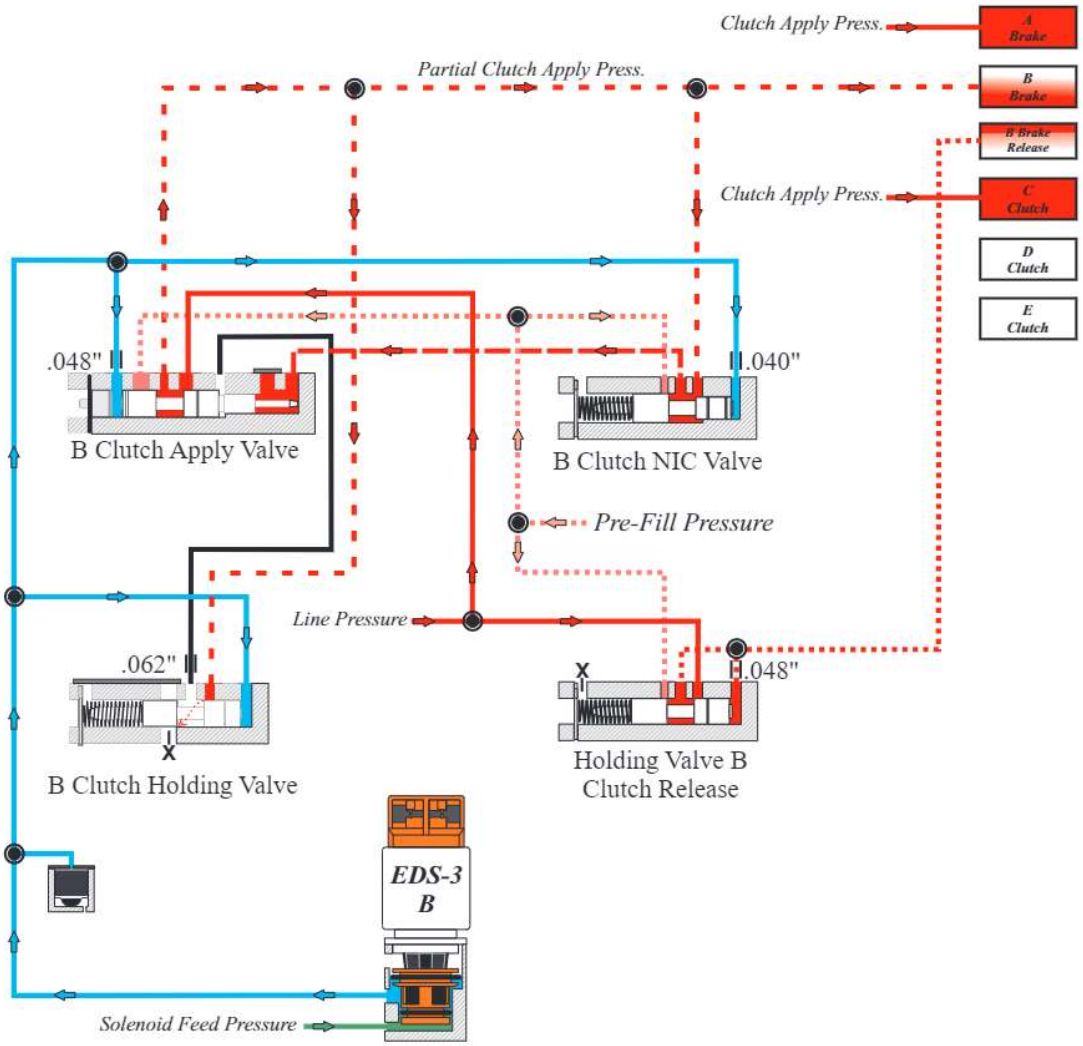

First generation of ZF8 speed transmissions utilize a decoupling strategy of the B Brake. This strategy is designed to provide fuel economy. The B Brake apply and release is entirely hydraulically controlled without the use of a piston return spring. Newer generations employ a return spring along with support software making these parts and transmissions incompatible.

When decoupling is activated, B clutch apply will be reduced to an approximate 20% slip. This can be observed by looking at the turbine shaft RPM data in an appropriate scan tool. Approximately 120 rpm's will be seen in drive at stand still, brake pedal fully applied.

Summary

The EDS-3 B Clutch Solenoid (N.V.) is at low duty cycle when at a stop in Drive with the brakes applied. This lessens B clutch apply pressure where a controlled exhaust occurs at the B Clutch Holding Valve. The partially slipping B clutch lessens engine load for fuel economy purposes.

Copyright © 2017 ATSG

Figure 4

B BRAKE OPERATION

DECOUPLING AT STAND STILL

Standstill decoupling is realized by opening/slipping multi-disc brake B. The following input dimensions are used for controlling the standstill decoupling:

Brake Light Switch: Standstill decoupling is only active if the service brake is applied. Once the service brake is released, power transmission of multi-disc brake B is closed immediately even before an accelerator pedal value is detected. In the vast majority of cases, the vehicle can be prevented from rolling backwards on gradients.

Accelerator Pedal Value: If a defined accelerator pedal value is exceeded, standstill decoupling is deactivated.

Transmission Output Speed: If a transmission output speed is detected, standstill decoupling is deactivated.

Engine Speed: The converter torque is calculated from the engine speed and the turbine speed (rpm differential) and the gearbox oil temperature.

Turbine Speed: The converter torque is calculated from the engine speed and the turbine speed (rpm differential) and the gearbox oil temperature.

Gearbox Temperature: The gearbox oil temperature is used to calculate the converter torque. In addition, standstill decoupling is only active within a gearbox oil temperature range of approx. 13 °C and 120 °C.

Slope Angle of the Vehicle: The vehicle's slope angle is used to adapt re-engaging of the clutch to the slopes you drive off from.

To enable driving off free of deceleration and load alteration, multi-disc brake B is not completely opened. A slight slip of approximately 20 % remains so that some torque is transmitted to the torque converter. If multi-disc brake B was completely open, no torque would need to be transmitted to the converter (except the inner friction in the gearbox). Jerking could result when driving off.

When at a standstill in the drive gear with the brake pedal applied, the input shaft rpm values can be as follows:

0 rpm when the B brake clutch is fully closed/applied.
Same as engine RPM when the B brake clutch is fully open/released.
Approximately 120 rpms when in the decoupling stage.

Figure 5

TYPICAL WIRING

TRANSMISSION CONTROL MODULE WIRING
(2013 Dodge Ram 1500 3.6L)

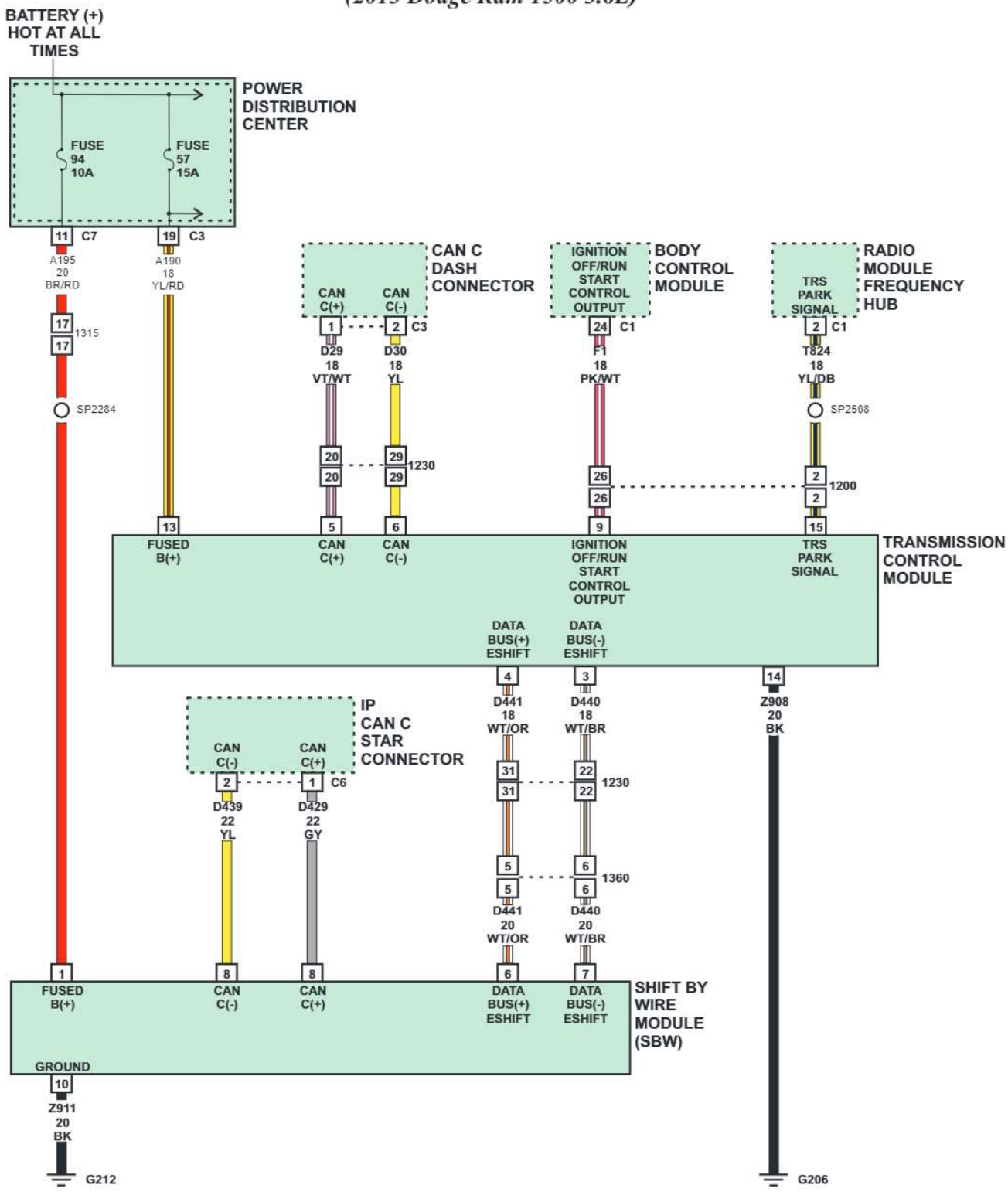

Note: Terminal identification will vary among manufacturers and models. Power, ground and CAN BUS terminals will be the most consistent.

Copyright © 2017 ATSG

Figure 6

TYPICAL WIRING

MECHATRONIC/TCM TERMINAL IDENTIFICATION AND LOCATION
(2013 Dodge Ram 1500 3.6L)

Harness Connector ***Case Connector***

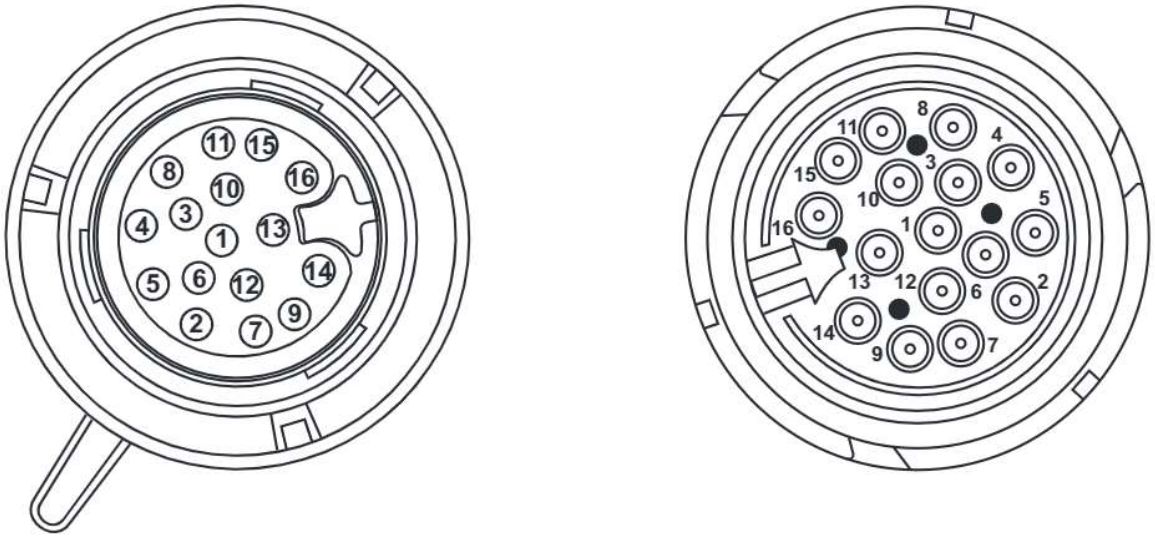

PIN #	DESCRIPTION AND FUNCTION	CIRCUIT	*External wire* COLOR
1	***Unassigned***		
2	***Unassigned***		
3	***Data Bus (-) ESHIFT***	**D440**	***WT/BR***
4	***Data Bus (+) ESHIFT***	**D441**	***WT/OR***
5	***CAN C (+)***	**D29**	***VT/WT***
6	***CAN C (-)***	**D30**	***YL***
7	***Unassigned***		
8	***Unassigned***		
9	***Ignition Off/Run/Start Cntrl. Output***	**F1**	***PK/WT***
10	***Unassigned***		
11	***Unassigned***		
12	***Unassigned***		
13	***Fused B(+)***	**A190**	***YL/RD***
14	***Ground***	**Z908**	***BK***
15	***TRS Park Signal***	**T824**	***YL/DB***
16	***Unassigned***		

Note: Terminal function is model dependent. Always refer to a wiring diagram for the specific vehicle being repaired.

Copyright © 2017 ATSG

Figure 7

ZF8HP45 SOLENOID LOCATION AND IDENTIFICATION

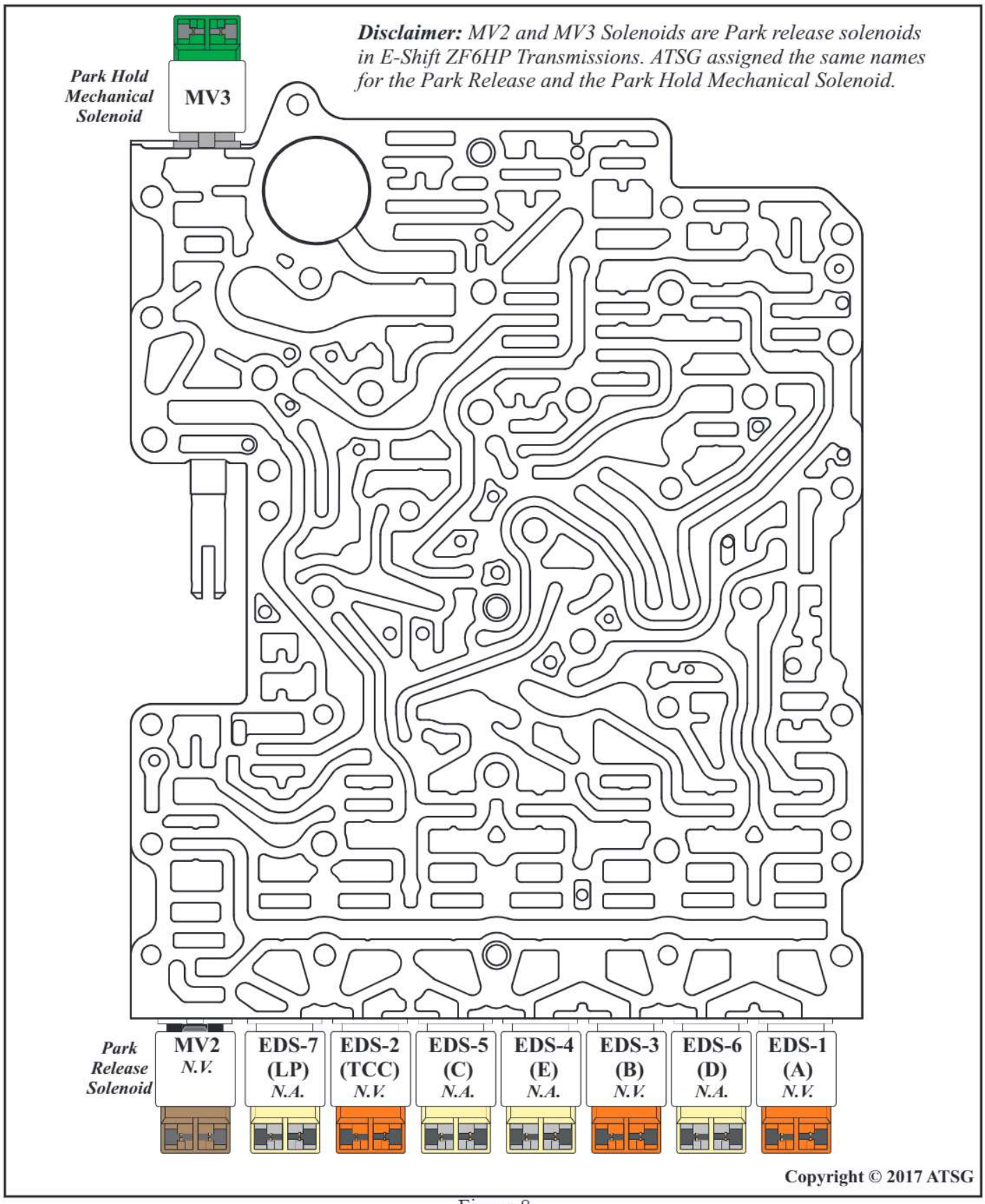

Copyright © 2017 ATSG

Figure 8

ZF8HP45 SOLENOID APPLICATION CHART

RANGE (Component) *Solenoid type*	PARK MV2 *N.V.* MV3	EDS-1 (A) *N.V.*	EDS-2 (TCC) *N.V.*	EDS-3 (B) *N.V.*	EDS-4 (E) *N.A.*	EDS-5 (C) *N.A.*	EDS-6 (D) *N.A.*	EDS-7 (LP) *N.A.*
Park	OFF	X		TP	X	X	X	X*
Reverse	ON	X		X	X	X		X*
Neutral	ON	X		TP	X	X	X	X*
D 1st gear	ON	X	X**	X	X		X	X*
D 2nd gear	ON	X	X**	X		X	X	X*
D 3rd gear	ON		X**	X			X	X*
D 4th gear	ON		X**	X		X		X*
D 5th gear	ON		X**	X	X			X*
D 6th gear	ON		X**					X*
D 7th gear	ON	X	X**		X			X*
D 8th gear	ON	X	X**			X		X*

Solenoid type - N.V. = Normally Vented / N.A. = Normally Applied

TP = Touch Point Pressure

X = Solenoid at high duty cycle
No "X"= Solenoid at low duty cycle

X* = Modulated by the TCM based on engine load and driving conditions for Line pressure control.

X = TCC Modulated by the TCM based on engine load and driving conditions.**

EMERGENCY RUNNING FUNCTION - LIMP IN MODE OR TCM POWER LOSS

In the event of a complete transmission electrical failure (loss of power to the TCM), the transmission enters default limp-in mode. When the TCM loses power, all solenoids are de-energized. Maximum pressure locks the transmission in 6th gear, and a diagnostic trouble code (DTC) is stored in memory. If the vehicle is in a forward gear range when the fault occurs, the transmission defaults to 6th gear.

If the vehicle is in park, reverse, or neutral, or if the engine is turned off when the fault occurs, the transmission will remain in park because the park lock release system cannot release the parking pawl. No hydraulic pressure is supplied to the driving clutches. In this situation, the manual park release lever must be used to disengage the park pawl.

The limp-in function remains active until the DTC is rectified or the stored DTC is erased with the appropriate scan tool.

Copyright © 2017 ATSG

Figure 9

SOLENOID NOMENCLATURE

VARIOUS SOLENOID NAMES

With this transmission having such a broad range of use in terms of manufacturers, there comes with it different names provided not only for the transmission itself, but for the solenoids and valves as well. This manual primarily utilizes the names provided by Dodge/Chrysler. Solenoid names also include the familiar EDS and MV designations from past BMW solenoid charts.

Refer to the reference table below for the variety of names given to these solenoids.

Solenoid A	EDS-1	EDS-A	PRV Solenoid 1**	N215
Solenoid B	EDS-3	EDS-B	PRV Solenoid 2	N216
Solenoid C	EDS-5	EDS-C	PRV Solenoid 3	N217
Solenoid D	EDS-6	EDS-D	PRV Solenoid 4	N218
Solenoid E	EDS-4	EDS-E	PRV Solenoid 5	N233
TCC Solenoid	EDS-2	EDS-WK	PRV Solenoid 6	N371
Line Pressure Solenoid	EDS-7	EDS-Sys	PRV Solenoid 7	N443
Park Release Solenoid	MV-2*	Solenoid Valve 1	Solenoid Valve 1	N88
Park Hold Mechanical Solenoid	MV-3*	Park Lock Solenoid	Park Lock Solenoid	N486

**ZF6HP E-Shift Park Release Solenoids were referred to as the MV-2 and MV-3 solenoids. Generation 1 versions also used an MV-1 solenoid which gave an EDS solenoid the ability to have a double function (D & E clutch control). Generation 2 eliminated the MV-1 solenoid and gave an EDS solenoid to each one of these two clutch assemblies. With the ZF8HP, literature is now showing what was an MV-2 with 6 speed E-Shift is now being called an MV-1 solenoid (See figure 14). This too has added additional confusion to the names and functions of the solenoids.*

*** PRV - Pressure Regulating Valve - Has also been labeled Electronic Pressure Control Valves - EPC-A, EPC-B, etc.*

Copyright © 2017 ATSG

Figure 10

ZF8HP45,70 SHIFT SOLENOID CHECKS

EDS1 (A), EDS 2 (TCC), EDS 3 (B) PRESSURE CONTROL SOLENOIDS

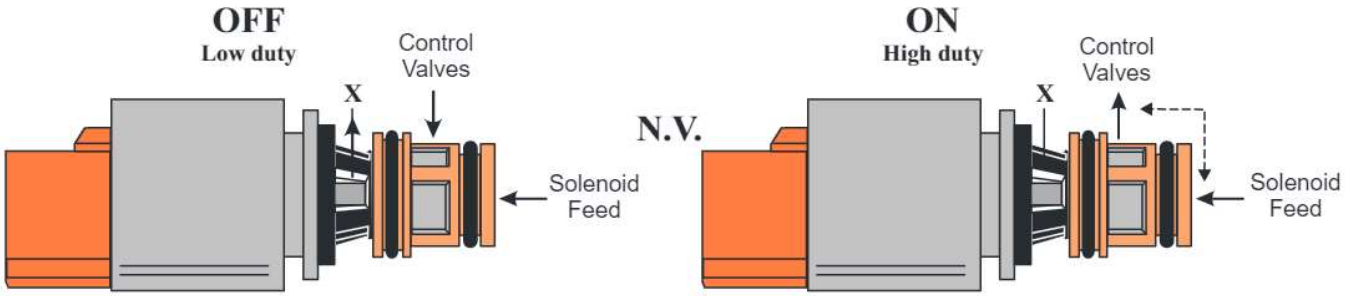

EDS 1 (A), EDS 2 (TCC) and EDS 3 (B) are Normally Vented variable Pressure Control Solenoids. When the solenoids are OFF, or at Low Duty cycle, pressure from the valves they are in control of is connected to the exhaust. When the Solenoids are ON, or at High Duty cycle, Solenoid Feed is connected thru the Solenoid to the valves they are in control of.

EDS 4 (E), EDS 5 (C), EDS 6 (D), EDS 7 (LP) PRESSURE CONTROL SOLENOIDS

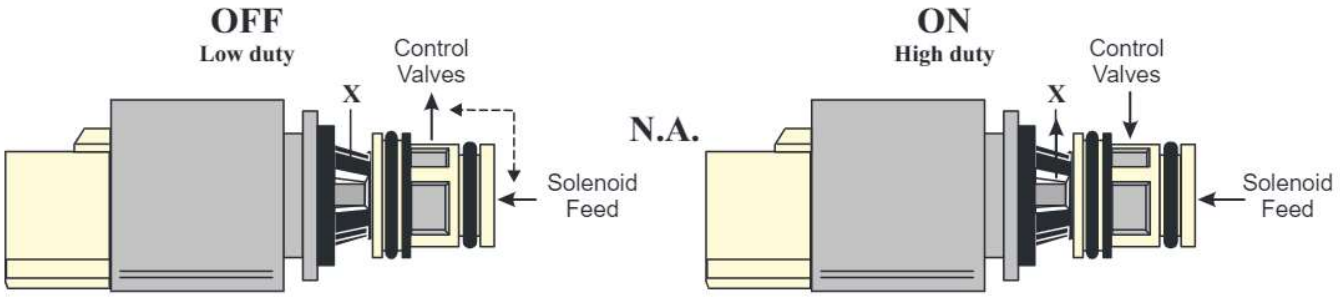

EDS 4 (E), EDS 5 (C), EDS 6 (D), EDS 7 (LP) are Normally Applied variable Pressure Control Solenoids. When the Solenoids are OFF, or at Low Duty cycle, Solenoid Feed is connected thru the Solenoid to the valves they are in control of. When the solenoids are ON, or at High Duty cycle, pressure from the valves they are in control of are connected to the exhaust.

PARK RELEASE ON/OFF SOLENOID

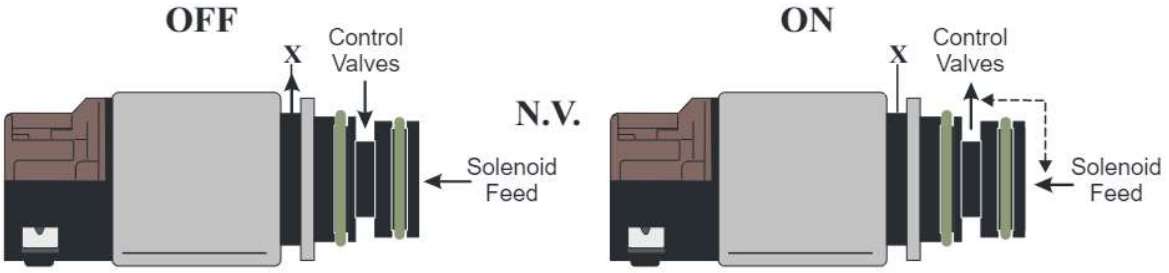

The Park Release Solenoid (MV2) is a Normally Vented On/Off type solenoid. When the Solenoid is OFF, pressure from the valves it is in control of is connected to the exhaust. When the solenoid turns ON, Solenoid Feed is connected thru the Solenoid to the valves they are in control of.

Copyright © 2017 ATSG

Figure 11

ZF8HP45,70 SHIFT SOLENOID CHECKS

EDS1 (A), EDS 2 (TCC), EDS 3 (B) PRESSURE CONTROL SOLENOIDS

Resistance Value 5-6 Ohms

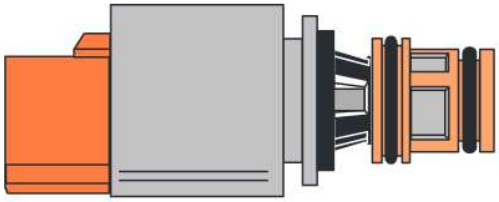

Solenoid Output Pressure Specs.
Off- 0psi/bar
On- 68.17psi
4.7 bars

EDS 4 (E), EDS 5 (C), EDS 6 (D), EDS 7 (LP) PRESSURE CONTROL SOLENOIDS

Resistance Value 5-6 Ohms

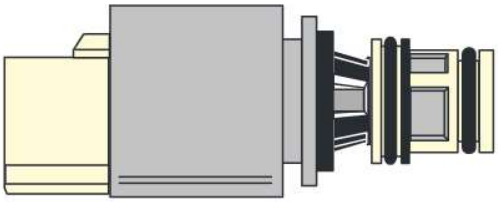

Solenoid Output Pressure Specs.
Off- 66.71psi
4.6 bars
On- 0psi/bar

PARK RELEASE ON/OFF SOLENOID (MV2)

Resistance Value 10-12 Ohms

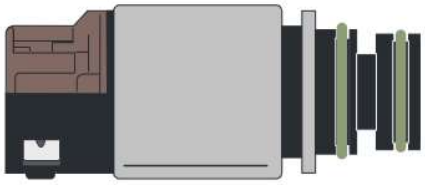

Solenoid Output Pressure Specs.
Off- 0psi/bar
On- 68.17psi
4.7 bars

Copyright © 2017 ATSG

Figure 12

ZF8HP55 M-SHIFT (NON-HIS) SOLENOID IDENTIFICATION AND LOCATION

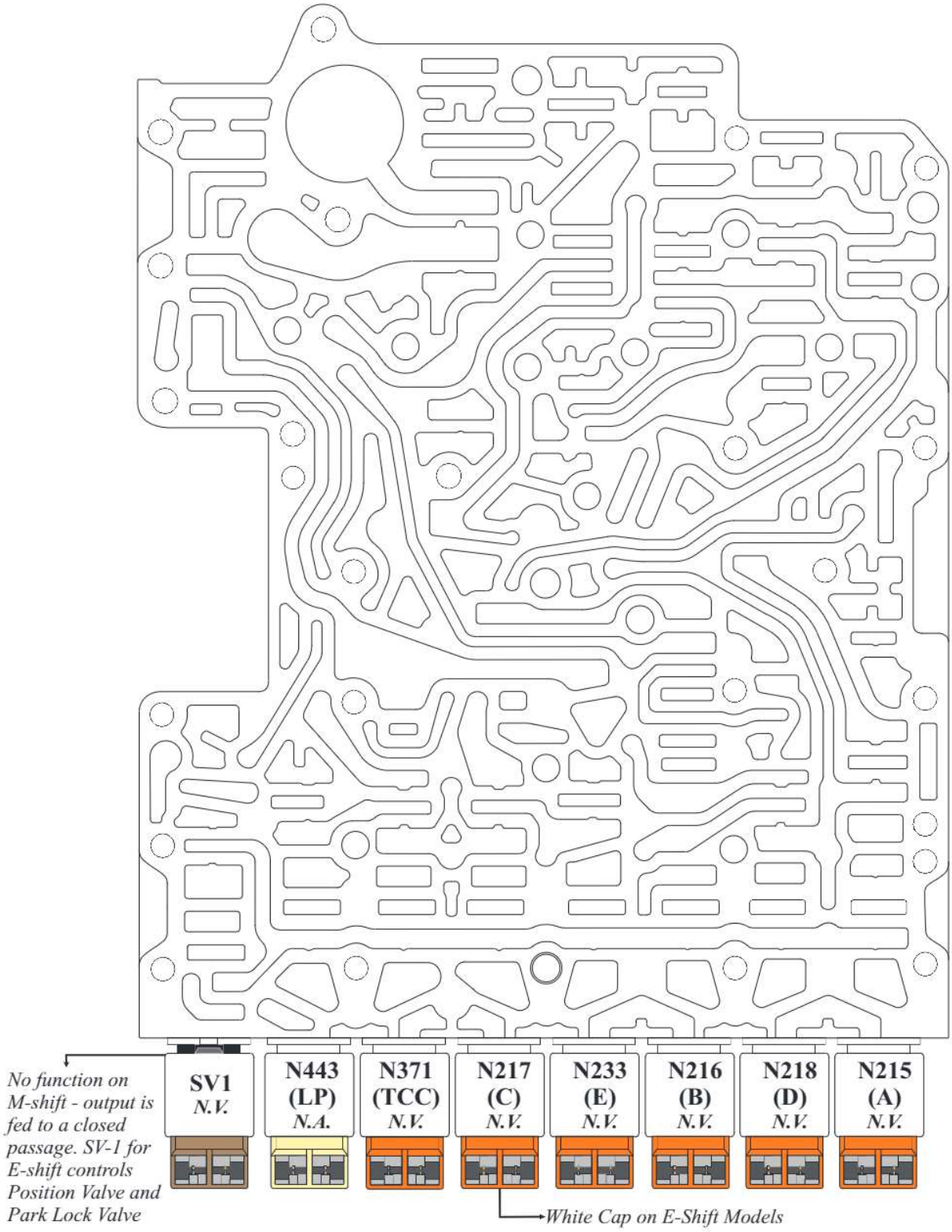

Copyright © 2017 ATSG

Figure 13

ZF8HP55 SHIFT SOLENOID CHECKS

(1) N215 - BRAKE A, (2) N216 - BRAKE B, (3) N217 - CLUTCH C (M-Shift) (4) N218 - CLUTCH D, (5) N233 - CLUTCH E, (6) N371 - TCC

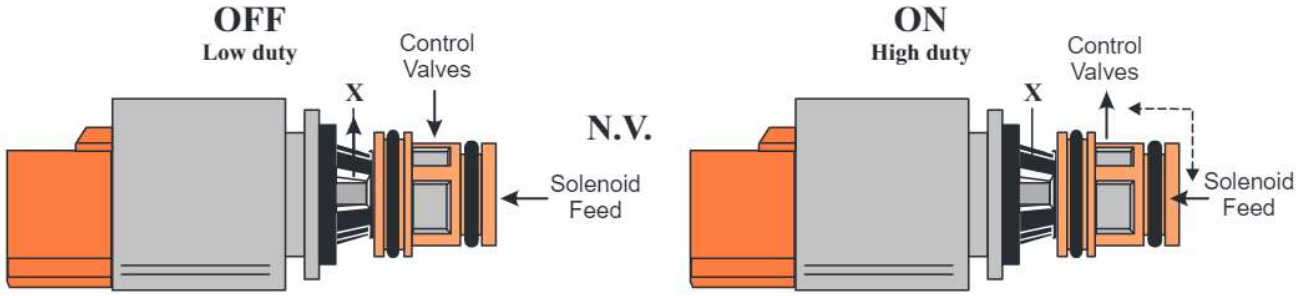

0.1 amp = 0psi (0 bar)
1.0 amp = 68psi (4.7 bar)

(3) N217 - CLUTCH C (E-Shift), (7) N443 - PRESSURE CONTROL SOLENOID

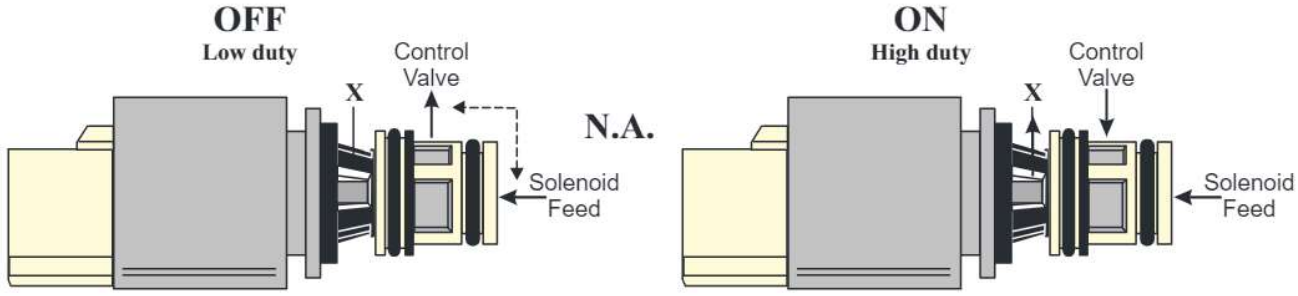

0.1 amp = 68psi (4.7 bar)
1.0 amp = 0psi (0 bar)

N88 (Black/Brown) SOLENOID VALVE 1 (E-Shift)

N88 in the M-Shift is non-functional. E-Shift models this solenoid controls both the Position Valve and the Parking Lock Valve. It assists in the engagement and release of the parking rod.

Copyright © 2017 ATSG

Figure 14

ZF8HP55 SHIFT SOLENOID CHECKS

(1) N215 - BRAKE A, (2) N216 - BRAKE B, (3) N217 - CLUTCH C (M-Shift) (4) N218 - CLUTCH D, (5) N233 - CLUTCH E, (6) N371 - TCC

Resistance Value 5-6 Ohms

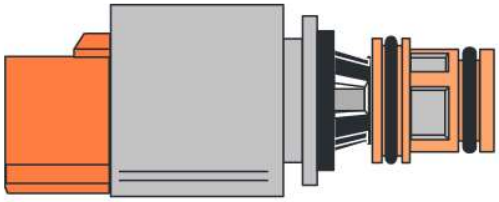

Solenoid Output Pressure Specs.
Off- 0psi/bar
On- 68.17psi
4.7 bars

(3) N217 - CLUTCH C (E-Shift), (7) N443 - PRESSURE CONTROL SOLENOID

Resistance Value 5-6 Ohms

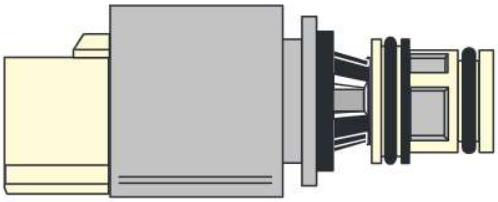

Solenoid Output Pressure Specs.
Off- 68.17psi
4.7 bars
On- 0psi/bar

N88 (Black/Brown) SOLENOID VALVE 1 (E-Shift)

Resistance Value 9-13 Ohms

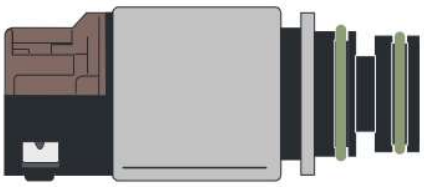

Solenoid Output Pressure Specs.
Off- 0psi/bar
On- 68.17psi
4.7 bars

Copyright © 2017 ATSG

Figure 15

E-SHIFT PARK RELEASE OPERATION

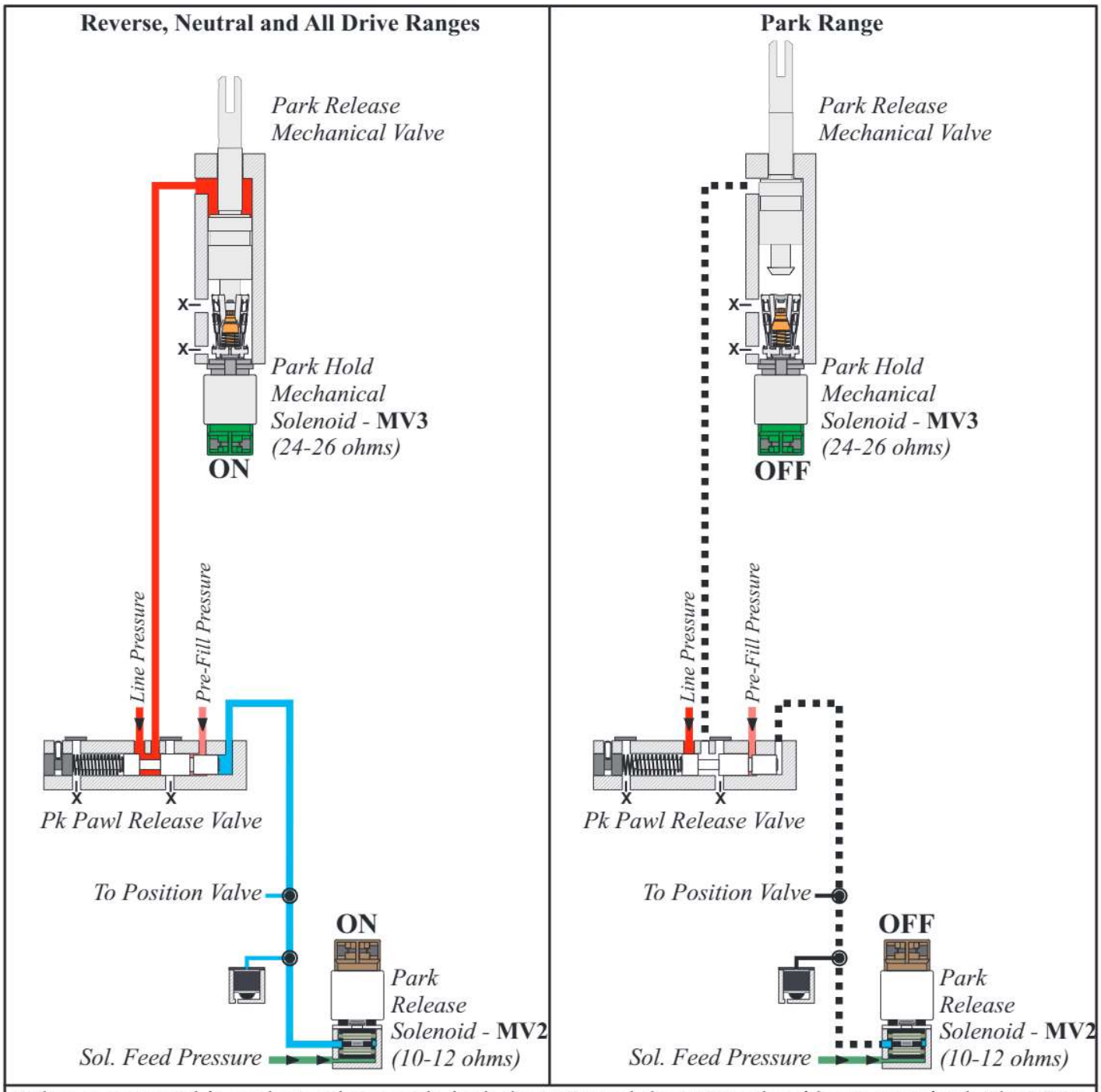

When a command is made to release Park, both the MV2 and the MV3 solenoids are energized. The MV2 supplies line pressure to the Park Release Mechanical Valve (PRMV) by way of the Park Pawl Release Valve (PPRV). The PRMV is connected to the park rod assembly which has a barrel spring loaded onto it to hold the rod into the Park Position. Line pressure from the PPRV overcomes this spring force and pushes the PRMV into the MV3 Solenoid Assembly compressing its spring loaded push valve. Simultaneously, the magnetic field of the MV3 solenoid pulls mechanical fingers into the PRMV hooking it into the park release position. When Park is requested, both solenoids turn off at which time pressure to the PRMV is exhausted and the MV3's magnetic field collapses. This releases the mechanical fingers hooking the valve. The spring loaded push valve in the MV3 solenoid launches the PRMV out of the assembly to ensure its release. The barrel spring on the Park Rod assembly pushed the rod into park.

Copyright © 2017 ATSG

Figure 16

ZF8HP55 TRANSMISSION DISASSEMBLY

INTRODUCTION

Figure 1

The Audi ZF8HP55 transmission can weigh as low as 311 pounds to as high as 322 pounds when filled with fluid depending on the engine version it's mated with. There are two ZF designations for this transmission, the 8HP-55AF and the 8HP-90AF. The service designations are 0BK and 0BL. Audi designates them as the AL551-8Q and AL951-8Q. The 0BL is a larger version of the 0BK. With this style of transmission weighing as much as it does, separating the center and front differential assemblies and housings from the main gearbox will be required for a complete transmission overhaul.

DISASSEMBLY

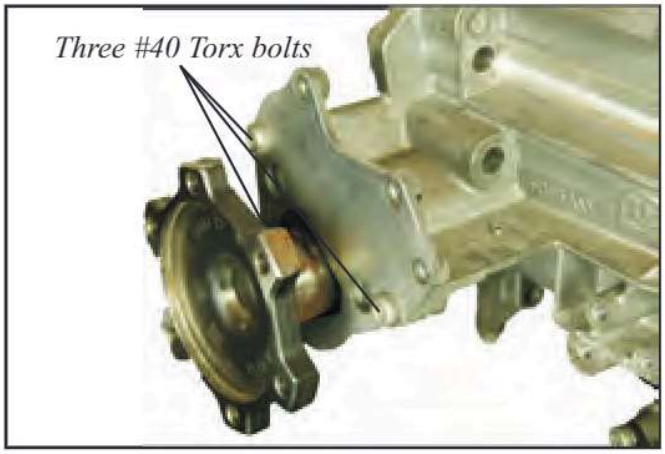

Figure 2

1. Using a #40 torx, remove 3 (1.183"x .038") aluminum left axle flange to case retaining bolts (figure 2). **Note:** *Unless noted, the #40 torx is the primary torx to be used throughout.*

Figure 3

2. With the bolts removed, the left axle flange, bearing and shaft assembly can be pulled out of the front differential and case. Once removed, carefully remove the torque converter (figure 3).

Figure 4

3. Next, remove the turbine shaft o-ring as shown in figure 4.

4. Remove 11 (1.757" x .310") aluminum differential housing to case attaching bolts as seen in figure 5 on the following page.

5. As the last bolt is being removed, carefully lift the front differential from the case (figure 6). Reach inside the differential housing area of the case and retrieve the bearing race and shim (figure 7).

ZF8HP55 TRANSMISSION DISASSEMBLY

Figure 5

6. Remove 6 (1.977" x .308") aluminum center differential housing to case attaching bolts as seen in figure 8. This particular transmission is also equipped with a vibration damper.

7. Next, remove the center differential from the transmission (figure 9).

8. The transfer gear case cover is next to be removed (figures 10, 11 and 12 on the following page). There are 15 bolts attaching this cover to the case of which 4 are steel (2.320" x .387") while the remaining 11 bolts are aluminum (1.980" x .310"). Remove all 15 bolts and the transfer gear case cover.

Figure 6

Figure 8

Figure 7

Figure 9

ZF8HP55 TRANSMISSION DISASSEMBLY

9. With the transfer gear case cover removed the double transfer gear assembly can be removed as seen in figure 13. The short shaft transfer gear sits over the long shaft transfer gear. Both spline into the center differential (figure 9). The short shaft is driven by the primary drive gear. The center differential then drives the long transfer shaft supplying split torque to the front axle spur pinion and to the rear differential.

10. Using a #50 torx, remove the steel bolt (1.202" x .310") attaching the primary drive gear to the output shaft of the transmission (figure 14).

Note: *This bolt seals against a rubber disk. Care must be taken not to damage it.*

Figure 12

Figure 10

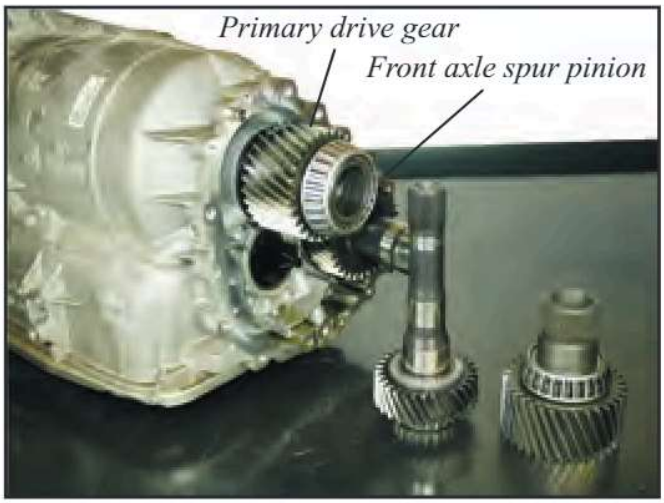

Figure 13

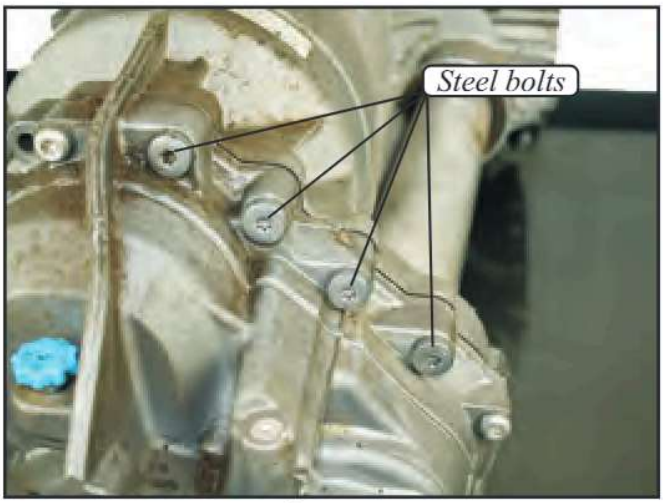

Figure 11

Figure 14

ZF8HP55 TRANSMISSION DISASSEMBLY

Figure 15

Figure 16

Figure 17

11. After the bolt is removed from the primary drive gear, it will take a slight tug to pull the gear from the transmission as it contains a double shaft seal between the inner bearing and gear (figure 15). Once the primary drive is removed, be sure to locate and secure the output shaft washer. Note: *Both the sealing disc and double shaft seal separate the transmission fluid from the transfer case oil.*

12. Remove the 2 steel bolt (1.380" x .310") attaching the front axle spur pinion and shaft flange (figure 16).

13. Next, pull the front axle spur pinion and shaft from the case (figure 17). Inside the axle spur pinion gear is a regular hexagon pocket which is used to drive a transfer case oil pump located inside the transfer gear case.

14. The next step is to remove the pass through connector sleeve (figure 18). Before doing so, it is always best to "discharge" any and all static electricity. Do this by touching a grounded object or by wearing a discharge wrist band. Do not touch contacts in transmission connector with hands. Once grounded, remove the 1 aluminum bolt (.960" x .220") securing the connector to the case.

Note: *Once the bolt is removed, you can remove the connector sleeve at this time by rotating it counter-clockwise (see figures 23 and 24).*

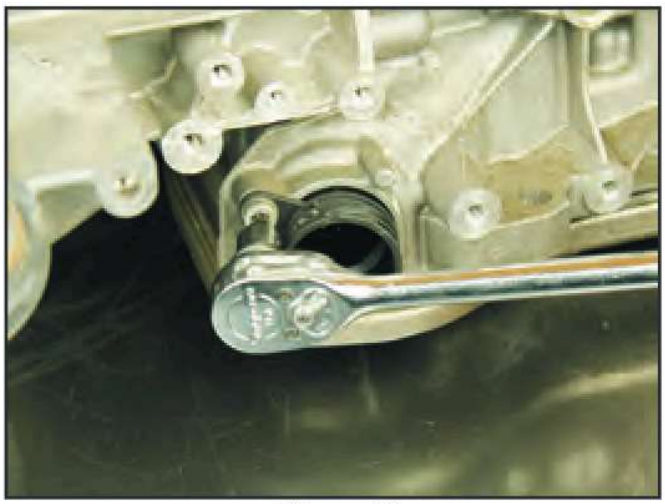

Figure 18

ZF8HP55 TRANSMISSION DISASSEMBLY

15. Some models have a 4 detent manual valve configuration for Park, Reverse, Neutral and Drive positions (figure 19). Others such as the Audi A8 utilizes a "shift-by-wire" function instead of a manual valve. This arrangement utilizes an automatic parking lock strategy. The internal parking rod has a barrel spring loaded pushing the rod into the park position. For these applications, to assist in the ease of removing and installing the Mechatronic assembly, rotate the emergency park release lever into a vertical position and secure it with a tie wrap as seen in figure 20.

16. Flip the transmission onto its back and remove 12 aluminum bolts (.858 x .230") securing the pan to the case and remove the pan and reusable pan gasket (figure 21).

17. Next, remove the filter as seem in figure 22. If the filter neck o-ring is sealing well, this may require using a tool such as a long flat head screw driver to pop the filter out of the suction port.

18. Rotate the pass through harness to Mechatronic assembly connector sleeve in a counter-clockwise direction and remove from the case as seen in figures 23 and 24 on the following page.

19. Remove the 1 steel bolt (.965" x .230") holding down the Mechatronic connector to the case as seen in figure 25.

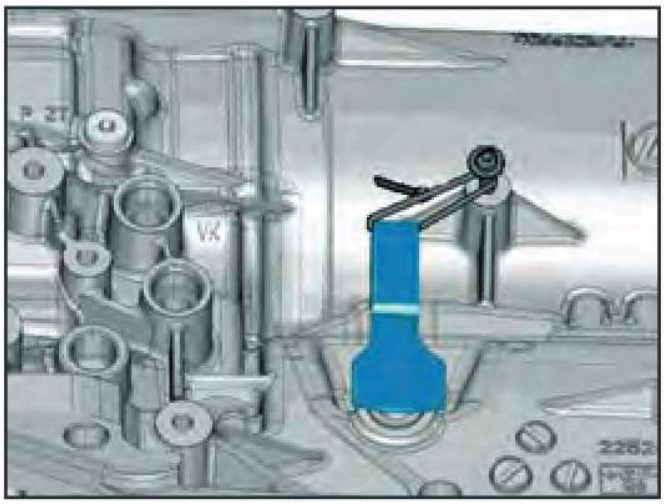

Figure 20

Figure 21

Figure 19

Figure 22

ZF8HP55 TRANSMISSION DISASSEMBLY

Figure 23

20. Remove 4 steel bolts (.965" x .230"), one which holds down the Output Shaft Speed Sensor and three which hold down part of the Mechatronic assembly (figure 26).

Note: Some models which utilize start-stop technology for fuel economy will be equipped with a Hydraulic Impulse Storage (HIS) as seen in figure 27. This will need to be removed at this time if so equipped.

21. Continuing to use the #40 torx, remove 14 steel shoulder bolts (2.510" x .230") retaining the Mechatronic assembly to the case a shown in figure 28 on the following page.

Figure 24

Figure 26

Figure 25

Figure 27

ZF8HP55 TRANSMISSION DISASSEMBLY

22. Carefully lift the Mechatronic unit from the case with the attached wiring harness (figure 29). Two oil pipes with o-rings fit into the Mechatronic unit and the pump. This will provide resistance removing the assembly in the similar way the filter would give.

23. Remove the B clutch sealing sleeve (figure 30).

24. Remove the 1 aluminum bolt (1.5" x .385") as shown in figure 31.

25. Remove 14 aluminum bolts (1.290" x .310") retaining the converter and front differential housing to the main case (figure 32).

Figure 30

Figure 28

Figure 31

Figure 29

Figure 32

ZF8HP55 TRANSMISSION DISASSEMBLY

Figure 33

26. Using a dead-blow hammer, separate the housing from the main case (figure 33).

27. Remove the gasket (figure 34) and the rubber seal from the housing (figure 35). **Note:** *Some units have a gear oil system utilizing a supply and return line from the center differential to the front differential. A gear oil pump is used to pressurize the system. The circulation of this gear oil transfers heat from the front axle differential to the transfer case. Oil temperatures drop here because the transfer case is not subjected to as much thermal stress.*

28. Remove the front pinion shaft tube (figure 36) and seal (figure 37) from the main case.

Figure 34

Figure 36

Figure 35

Figure 37

ZF8HP55 TRANSMISSION DISASSEMBLY

29. Using a #50 torx, remove 14 aluminum bolts (3.170" x .310") retaining the pump assembly to the main case (figure 38).

30. Using a suitable tool , carefully separate the pump assembly from the main case with one hand while holding the stator support with the other (figure 39).

31. With the pump removed (figure 40), use the dismantling and rebuilding procedures for the remainder of the unit beginning on page 34 which is located after the external dismantling of the ZF8HP45 transmission.

32. The disassembly of the ZF8HP45 pump shown on pages 41 through 44 is similar to the ZF8HP55 transmission. The one difference is there is an additional bolt that holds the pump cover to the pump housing next to the pump's driven sprocket as seen in figure 41.

Follow the procedures given on pages 41 to 43, figures (steps) 1 through 13 and then remove the #40 steel torx bolt (1.533"x .232") shown below in figure 41. Once this bolt is removed, the pump cover can be lifted off of the pump housing. Once this cover is removed, the drive sprocket, chain and double stroke vane pump can be lifted off of the pump housing. The double stroke vane pump may need to be lifted up using a flat end screwdriver while simultaneously lifting up on the drive sprocket and chain.

Figure 39

Figure 40

Figure 38

Figure 41

ZF8HP55 TRANSMISSION DISASSEMBLY

Figure 42

Figure 43

Figure 44

33. The main section contained in the pump assembly shown in figure 42 is the housing (figures 43 and 44). For all 8HP transmissions, this housing provides several functions and therefor consists of the following:

a. The stator support shaft for the toque converter
b. The complete A brake assembly
c. The B brake piston assembly
d. It houses the double stroke vane pump
e. It supports the pump drive sprocket driven by the torque converter.

Page 6 of this manual explained how the apply and release along with the decoupling feature of Brake B is all accomplished hydraulically. There is not a return spring for the brake piston. Later models now have a return piston for brake B along with new software to control its apply and release. This manual only presents the B brake without a return spring. Caution needs to be taken as the return spring and non return spring parts, or complete transmissions with or without a return spring are not interchangeable.

It is not recommended to disassemble the double stroke vane pump entirely as seen in figure 45. To do so will require spreading two very small and thin snap rings. If they are not properly closed down for a tight fit when reassembling the pump, it could cause pump failure. The reasons to disassemble the pump is to inspect it for wear and to replace pump drive shaft seal and pump cover O-ring.

Figure 45

ZF8HP45 TRANSMISSION DISASSEMBLY

Figure 1

1. With the transmission removed from the vehicle, carefully pull the torque converter assembly from the transmission and set the converter aside.
Note: *Transmission disassembly can be done on the bench if a suitable mounting device is not available.*

2. Spin the transmission around so that the four wheel drive adapter housing, or the two wheel drive output (propellor) shaft flange is facing you.

3. For four wheel drive applications, remove the seven adapter (extension) housing attaching bolts and rear oil seal with a suitable slide hammer and screw. Then remove the output shaft snap ring and washer.

4. For two wheel drive applications, there is a 34 mm 12 point nut double staked to the output shaft 180 ° from each other. Using a suitable punch, remove the staking from the output shaft flange nut, and loosen the nut about one thread using a 34 mm 12 point socket and special tool C-3281 or equivalent to hold the flange (Note: *with shift by wire, the park rod should be engaged which will prevent the need for a special holding tool*).

5. For both two and four wheel drive applications, attach a dial indicator to the transmission positioning the plunger against the end of the output shaft as seen in figure 3. Zero the dial indicator and move the output shaft in and out. Record the maximum travel for assembly reference.

Figure 2

Figure 3

End play specification is between 0.11 - 0.42 mm (0.0043 - 0.0165 in.). If end play is outside this range, a different selectable end play shim located in the front of the transmission must be used during assembly.

6. Using an impact gun or equivalent, remove the 34 mm 12 point nut and output flange from the output shaft (figure 4)

7. Remove the rear seal and output shaft washer (figure 5). The next step is to remove the pan and Mechatronic assembly.

Note: *It is highly recommended that an anti-static wrist strap is worn when handling the Mechatronic Unit to avoid damaging the TCM from an electrostatic discharge.*

ZF8HP45 TRANSMISSION DISASSEMBLY

Figure 4

Figure 5

8. Using a # 40 torx, remove 13 filter pan assembly attaching bolts (1.117"x.231") as seen in figure 6.

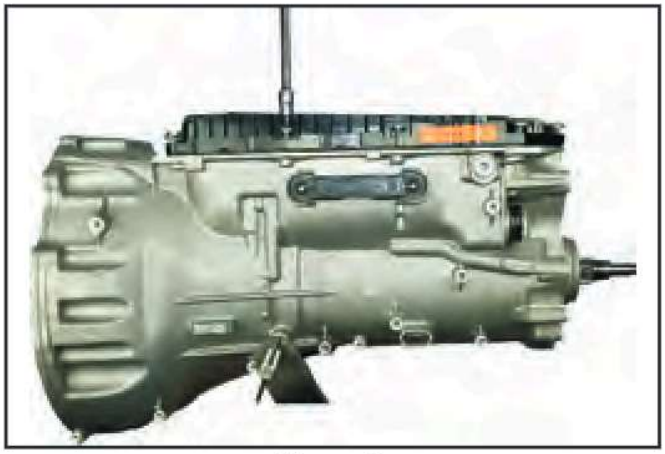

Figure 6

Figure 7

9. Once the attaching bolts are removed, carefully lift the filter pan assembly from the transmission. You may need to use a flat head screw driver to pop the filter o-ring to pump seal (figure 7).

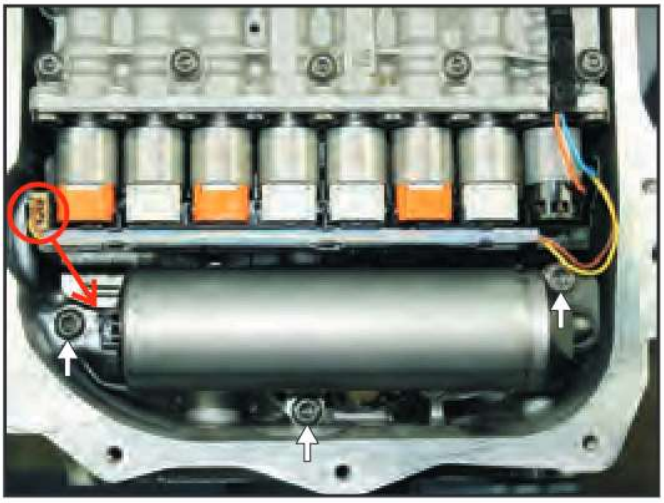

Figure 8

10. Once the filter pan has been removed, you may find that the unit is equipped with a Hydraulic Impulse Storage (HIS) accumulator cylinder at the base of the Mechatronic Unit (see figure 8). This is part of an optional engine Start-Stop strategy for increased fuel economy and reduced emissions. At the left end of the cylinder is a connector for the built in "Latching Solenoid." Some units do not come with this solenoid plugged in. In these instances, its connector will be located in a blind holding pocket at the left end of the solenoid conductor plate as seen in figure 8.

11. To remove the HIS, unplug the latching solenoid if it is being used. Using a # 40 torx, remove three attaching bolts as shown in figure 8. The far right bolt is 2.318" in length while the middle and far left bolts measure 0.760" in length.

ZF8HP45 TRANSMISSION DISASSEMBLY

12. With the HIS removed, using a # 40 torx, remove the output speed sensor hold down bolt and two Mechantronic hold down bolts. All three bolts measure 0.760" x 0.232" (figure 9).

13. Using a flat head screwdriver or equivalent, carefully pry up the pass through connector sleeve's locking tab as seen in figure 10.

14. Once the locking tab is in the fully upright position, carefully remove the pass through connector sleeve (electrical harness insulator) with special tool 10377 or equivalent (figure 11).

15. Most ZF8HP transmissions utilize shift by wire strategy. This means there is no manual valve inside the transmission. The barrel spring on the internal park rod is loaded to push the rod into the park position.

Depending on the style case and emergency park release levers, there may be accommodations to hold the lever out of park such as the one seen in figure 12. This will aid in the removal and installation of the Mechatronic assembly. Look to see if you have any such accommodations. If so, rotate the lever out of park and secure its position. Another option is to install and rotate a lever holding it in the "out of park" position. Secure it with a wire tie around the lever and through a bolt hole in the pan rail.

Figure 10

Figure 11

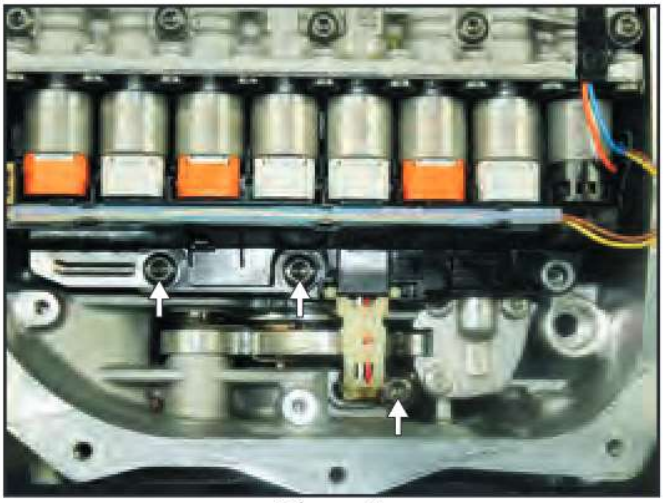

Figure 9

Figure 12

ZF8HP45 TRANSMISSION DISASSEMBLY

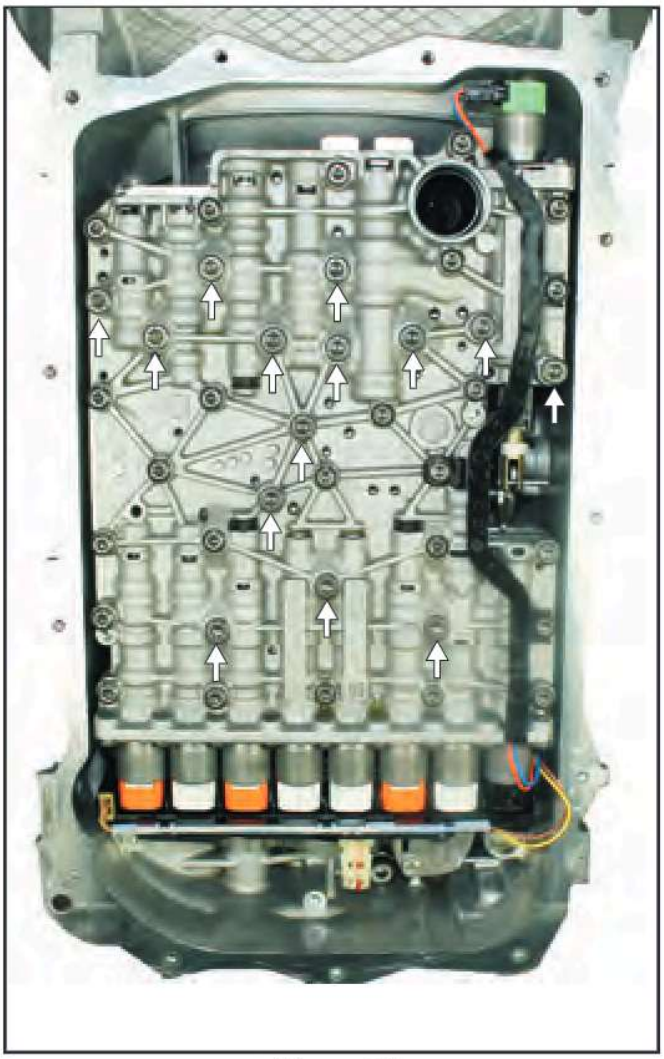

Figure 13

16. Using a # 40 torx, remove 14 Mechatronic attaching bolts (2.318" x 0.208") as shown in figure 13. **Do not** remove any of the other # 27 torx head bolts at this time. The 14 # 40 torx head bolts can be quickly identified by its near square top design as pointed out in figure 14. The remaining # 27 torx head bolts have a more rounded top.

17. With the bolts removed, carefully lift the Mechatronic unit from the transmission (figure 15). An o-ringed pump suction pipe and an o-ringed pump pressure pipe will give resistance in removing the assembly (figure 16). Similar to removing the filter, it may require a flat head screw driver or equivalent to carefully pop the o-ring pipe seals from the pump freeing the assembly for removal.

Figure 15

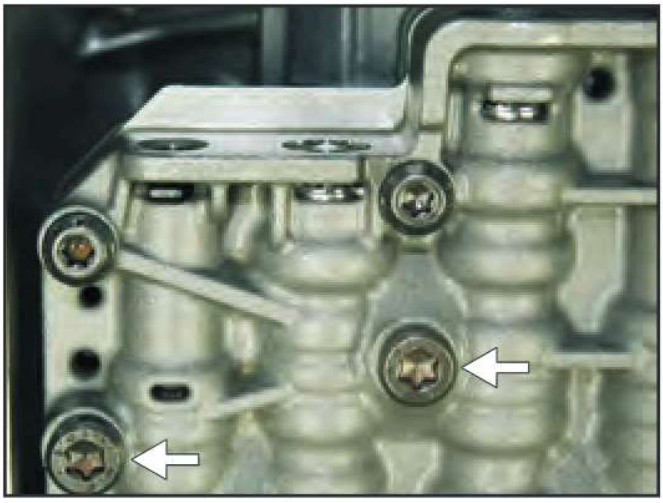

Figure 14

Figure 16

ZF8HP45 TRANSMISSION DISASSEMBLY

18. With the Mechatronic assembly removed, locate and remove the rubber tube seal in the case as shown in figure 17.

19. Remove the rubber converter o-ring from the turbine shaft (figure 18).

20. Using a # 50 torx, remove 13 aluminum pump retaining bolts (2.925"x 0.310") and washer seals as seen in figure 19.

21. To remove the pump assembly, carefully pry between the case and pump using one hand while simultaneously lifting the assembly out of the case with the other (figures 20 and 21).

Figure 19

Figure 17

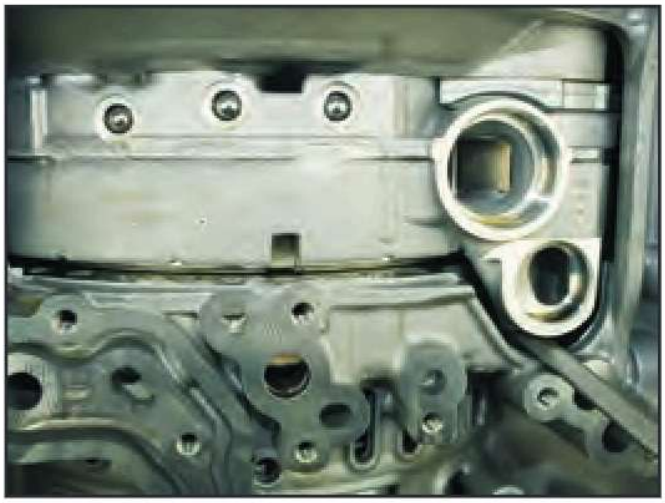

Figure 20

Figure 18

Figure 21

TRANSMISSION DISASSEMBLY

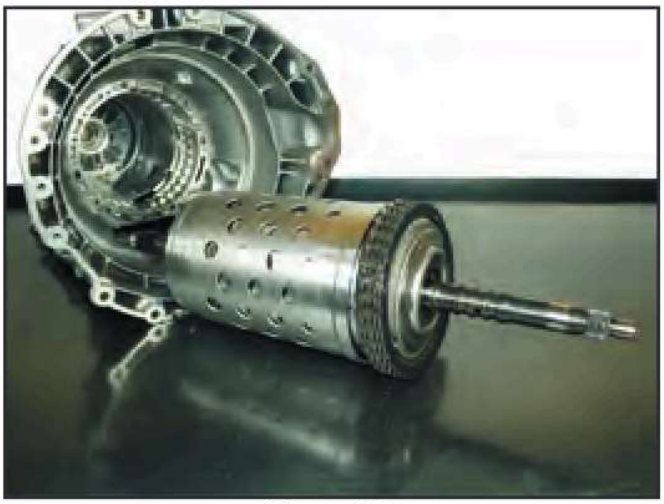

Figure 22

22. If the unit is on the bench, carefully slide out the input shaft to output shaft and P4 annulus drum assembly from the case (see figure 22). If the unit was fixture mounted, carefully lift the assembly from the case (see figure 23). **Caution:** *This complete assembly weighs approximately 54 pounds. Care needs to be taken when lifting the assembly from the transmission to prevent injury.*

23. Carefully position the 54 pound input shaft to output shaft and P4 annulus drum assembly on a fixture which will allow for safe disassembly (figure 24). Use special tools 8925-3 and 1130 or equivalent.

24. Remove the selectable shim (figure 25).

Figure 23

Figure 24

Figure 25

TRANSMISSION DISASSEMBLY

25. Remove the B Brake assembly (figure 26).

26. Remove the P1 annulus gear (figure 27).

27. Remove the needle bearing and holding plate from the P1 carrier (figure 28).

28. Remove the turbine shaft sealing rings (figure 29).

29. Strategically install special 3 piece tool 10378 or equivalent onto the P4 annulus drum assembly to protect the drum when removing the snap ring (figure 30).

Figure 28

Figure 26

Figure 29

Figure 27

Figure 30

TRANSMISSION DISASSEMBLY

Figure 31

30. Pry the snap ring from the opposite side of the snap ring openings to release or from the open end side (figure 31). Note: When the snap ring is removed the internal clutch drum may drop slightly.

31. Remove the P1 planetary carrier (figure 32).

32. Remove the P1/P2 sun gear (figure 33).

33. Remove the input shaft and P2 carrier assembly (figure 34).

34. Remove the needle bearing and holding plate (figure 35).

Figure 32

Figure 34

Figure 33

Figure 35

TRANSMISSION DISASSEMBLY

35. Remove the P2 annulus/P3 sun gear (figure 36).

36. Remove the D clutch drive shell containing the C/E clutch retainer drum/P4 sun gear assembly from the P4 annulus drum and set aside. (figure 37).

37. Separate the D clutch drum/P4 carrier/output shaft assembly from the P4 annulus drum and set aside (figures 38 and 39).

38. Retrieve the D clutch drum/P4 carrier/output shaft assembly. Strategically install special 3 piece tool 10378 or equivalent (Adapt-A-Case tool shown) onto the D clutch drive shell to protect the shell when removing the snap ring (figure 40).

Figure 38

Figure 36

Figure 39

Figure 37

Figure 40

TRANSMISSION DISASSEMBLY

Figure 41

39. Remove the P3 planetary carrier from the D clutch drive shell (figure 41).

40. Remove the needle bearing (figure 42).

41. Remove the C/E clutch retainer/P4 sun gear assembly from the D clutch drive shell (figure 43) and set on the bench (figure 44).

42. Remove the snap ring from the C/E clutch retainer/P4 sun gear assembly (figure 45).

Figure 42

Figure 44

Figure 43

Figure 45

TRANSMISSION DISASSEMBLY

43. Remove the P3 annulus gear from the C/E clutch retainer/P4 sun gear assembly (figure 46).

44. Remove the snap ring from the C/E clutch retainer/P4 sun gear assembly (figure 47).

45. Remove the E clutch drum from the C/E clutch retainer/P4 sun gear assembly (figure 48).

46. Remove the closed face needle bearing sitting on top of the C clutch drum assembly (figure 49).

47. Remove the C clutch drum assembly from the C/E clutch retainer/P4 sun gear assembly (figure 50).

Figure 48

Figure 46

Figure 49

Figure 47

Figure 50

TRANSMISSION DISASSEMBLY

Figure 51

48. Remove the closed face needle bearing from the bottom of the C/E clutch retainer/P4 sun gear assembly (figure 51).

49. Inspect the P4 annulus gear located in the bottom of the P4 annulus drum (figure 52). If it needs to be removed for cleaning or to replace it due to damage, it is secured in place by a snap ring inside the drum (figure 53). In the snap ring, there are holes near the open end which can be used by a pick or snap ring plyers to remove the snap ring from the drum (figure 54). When the snap ring has been removed, the P4 annulus gear can be lifted out of the drum for cleaning purposes or replacement (figure 55).

Figure 52

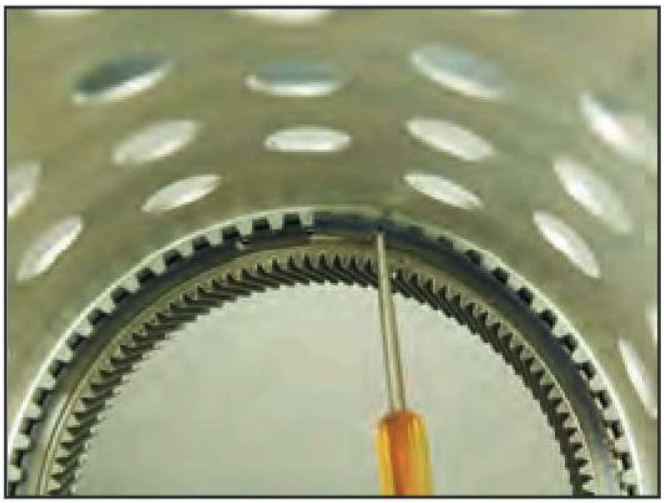

Figure 54

Figure 53

Figure 55

TRANSMISSION DISASSEMBLY

"A" BRAKE AND PUMP DISASSEMBLY

1.Remove the A brake retaining snap ring (figure 1).

2. Lift and remove the A brake hub along with most of the A brake clutch assembly as seen in figure 2.

3. Lift the final A brake steel plate and wave plate from the housing (figure 3).

4. Remove the open face needle bearing as seen in figure 4.

5. Carefully lift and remove the B brake piston retainer and piston from the assembly (figure 5).

Figure 3

Figure 1

Figure 4

Figure 2

Figure 5

TRANSMISSION DISASSEMBLY

Figure 6

6. Separate the B brake piston from the B brake piston retainer (figure 6).

7. Remove the B brake o-ring piston seal from the housing (figure 7).

8. Remove the pump/A brake housing to case o-ring as seen in figure 8.

9. Carefully position pump/A brake housing on a suitable press to compress the A brake piston bellville return spring. Once compressed, remove the split retaining rings (figure 9).

10. Remove the bellville return spring (figure 10).

Figure 7

Figure 9

Figure 8

Figure 10

TRANSMISSION DISASSEMBLY

11. Lift the A brake piston from the pump housing (figure 11).

12. Using a # 40 torx, remove the 6 internal bolts as shown in figure 12.

13. Next, using the same # 40 torx, remove the external bolt from the pump housing (figure 13).

14. Carefully separate the pump/A brake housing from the cover as seen in figure 14.

15. Carefully pry up on the oil pump and remove it from the housing (figure 15).

Figure 13

Figure 11

Figure 14

Figure 12

Figure 15

TRANSMISSION DISASSEMBLY

Figure 16

16. Remove pump drive sprocket and chain from the pump/A brake housing (figure 16).

17. Remove the two o-rings from the pump assembly (figure 17).

18. Using the access notch in the pump and a suitable tool, remove the pump cover plate retaining snap ring (figure 18).

19. Remove the cover plate (figure 19).

20. Remove the center oil pump seal (figure 20).

Figure 17

Figure 19

Figure 18

Figure 20

TRANSMISSION DISASSEMBLY

"E" CLUTCH DISASSEMBLY

1. Using a suitable press, compress the E-clutch piston and remove the retaining snap ring (figure 1).

2. Remove the E-clutch piston from the clutch hub (figure 2).

3. Remove the E-clutch piston (figure 3).

4. Remove the entire E-clutch assembly noting the stack-up configuration (figure 4).

5. Remove the belleville spring from the E-clutch hub (figure 5).

Figure 3

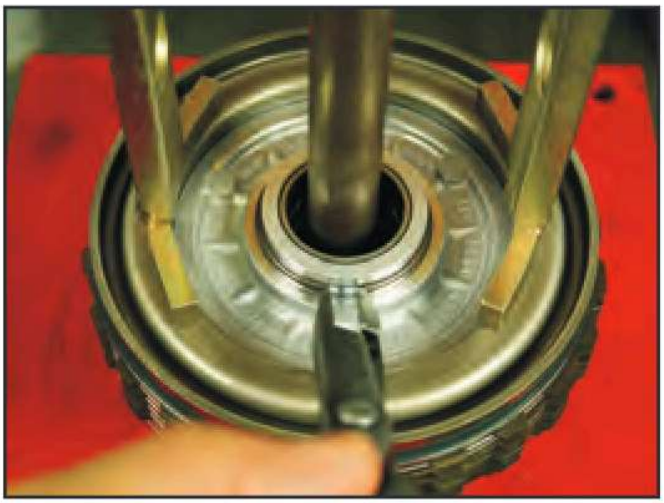

Figure 1

Figure 4

Figure 2

Figure 5

TRANSMISSION DISASSEMBLY

Figure 1

"C" CLUTCH DISASSEMBLY

1. Using a suitable press, compress the C-clutch piston and remove the retaining snap ring (figure 1).

2. Remove the C-clutch piston and piston retainer from the clutch hub (figure 2).

3. Remove the entire C-clutch assembly noting the stack-up configuration (figure 3).

4. Remove the belleville spring from the C-clutch hub (figure 4).

5. Separate the hub from the clutch shaft (figure 5).

Figure 2

Figure 4

Figure 3

Figure 5

TRANSMISSION DISASSEMBLY

"D" CLUTCH DISASSEMBLY

1. Press down on the D-clutch backing plate with one hand while using a suitable tool in the other to remove the retaining snap ring as shown in figure 1.

2. Remove the D-clutch backing plate (figure 2) and clutch assembly (figure 3).

3. Place the D-clutch drum assembly on a suitable press and compress the oil baffle enough to clear the locking tabs (figure 4). Using the pocket provided in the oil baffle, use a punch or screwdriver to rotate the baffle in a clockwise direction until the tabs on the hub are clear of the baffle (figure 5).

Figure 3

Figure 1

Figure 4

Figure 2

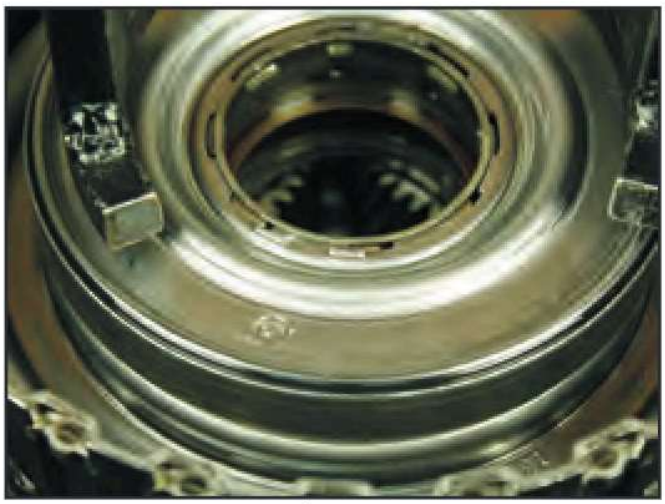

Figure 5

TRANSMISSION DISASSEMBLY

Figure 6

6. Remove the oil baffle (figure 6).

7. Remove the belleville spring (figure 7).

8. Lift the D-clutch piston from the drum (figure 8).

9. The D-clutch drum assembly contains molded seals. If these are damaged, the entire assembly will need to be replaced (figure 9).

10. Flip drum assembly over and remove two sealing rings below the output shaft as seen in figure 10.

Figure 7

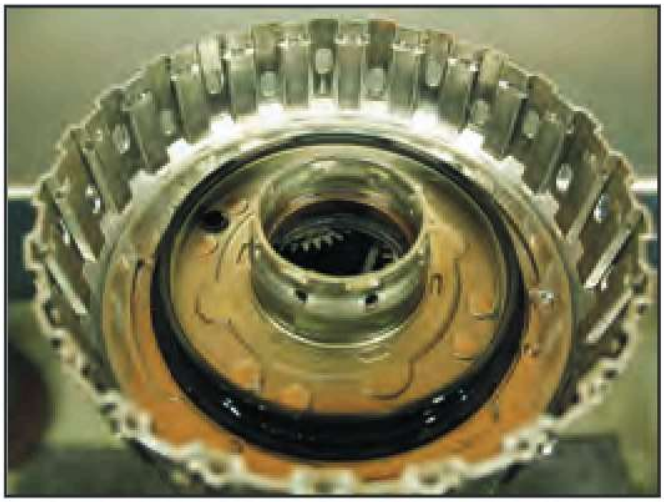

Figure 9

Figure 8

Figure 10

TRANSMISSION DISASSEMBLY

MECHATRONIC DISASSEMBLY

Caution: It is advised to wear a ground wrist strap when handling the Mechatronic Assembly at all times to prevent ESD damage to the TCM.

1. The ZF8HP55 Mechatronic assembly is significantly different from the assembly used in the ZF8HP45, 70 & 90 transmissions. However, the disassembly and reassembly are very much similar.

2. If so equipped, begin by removing the three #27 torx bolts (1.573" x .191") retaining the Park Hold Mechanical Solenoid harness to the valve body (figure 1) and unplug the solenoid (figure 2).

Note: Not all ZF 8 speed transmissions use a Park Hold Mechanical Solenoid. Without having this harness to remove, this step is bypassed.

3. Using the same #27 torx bit, remove 5 Mechatronic attaching bolts (2.359" x .191") as identified in figure 3.

4. Flip the assembly over and carefully remove the Mechatronic electronics from the valve body (figure 4). This may require using a flat blade screw driver and alternate side lifting up the assembly by their anchor pins.

5. Flip the valve body assembly over and remove all remaining1.573" x .191" #27 torx bolts (figure 5).

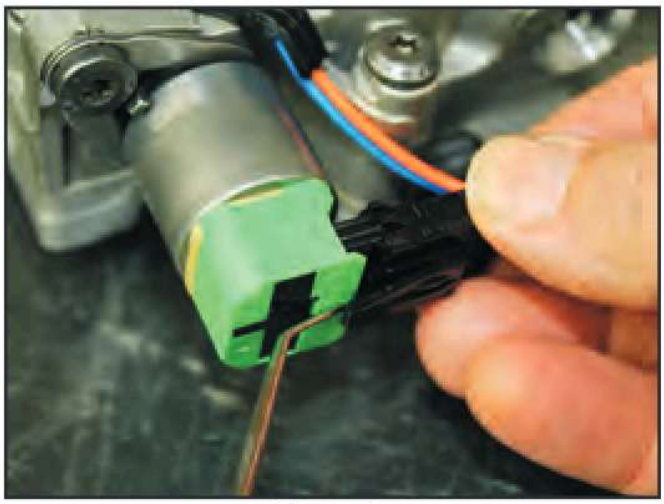

Figure 2

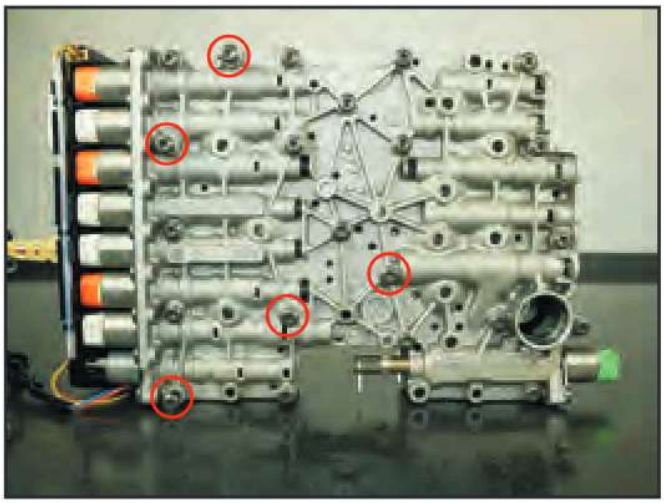

Figure 3

Figure 1

Figure 4

TRANSMISSION DISASSEMBLY

Figure 5

6. Once all bolts are removed, the two valve body halves are typically stuck to the separator plate's black silicone sealant bead. With the main valve body on upward side, locate a slot in the casting. Use this slot to pry upward on the separator plate using a flat blade screw driver or equivalent as seen in figure 6. Locate another area where with the spacer plate can be lifted by hand also seen in figure 6.

7. With the valve body halves separated (figure 7), remove the adapter/pump suction sleeve (figure 8), all check valves, check balls and screens from the channel plate. The dampers can be pushed out using a pick through their exhaust ports as seen in figure 9.

Figure 6

Figure 8

Figure 7

Figure 9

TRANSMISSION DISASSEMBLY

8. Use the # 27 torx bit to remove 9 solenoid bracket hold down bolts (figure 10) and the one bracket hold down bolt for the Park Lock Mechanical solenoid (figure 11).

9. After removing the fluid transfer port (figure 12), the valve body is now ready to be washed and inspected. All valve bores can be easily inspected for wear using a borescope that connects to a smart phone like the one seen in figure 13. Another more common method is to perform vacuum tests on valves known to produce bore wear issues. Visit Sonnax's web site (www.sonnax.com) for specific 8HP tests.

10. Refer to figures 14 to 20 when cleaning, inspecting and reassembling the ZF8HP45/70/90 valve body. Units that use the Hydraulic Impulse Storage (HIS) must have the HIS one way check valve as identified in figure 17. Non HIS units may or may not have the check valve. The valve body shown in figure 7 does not have the check valve.

11. Refer to figures 21 to 27 when cleaning, inspecting and reassembling the ZF8HP55 valve body. Units that use the Hydraulic Impulse Storage (HIS) must have the HIS one way check valve as identified in figure 24. Non HIS units may or may not have the check valve. The valve body shown in figure 7 does not have the check valve.

Note: See page 66 for Mechatronic reassembly procedures.

Figure 11

Figure 12

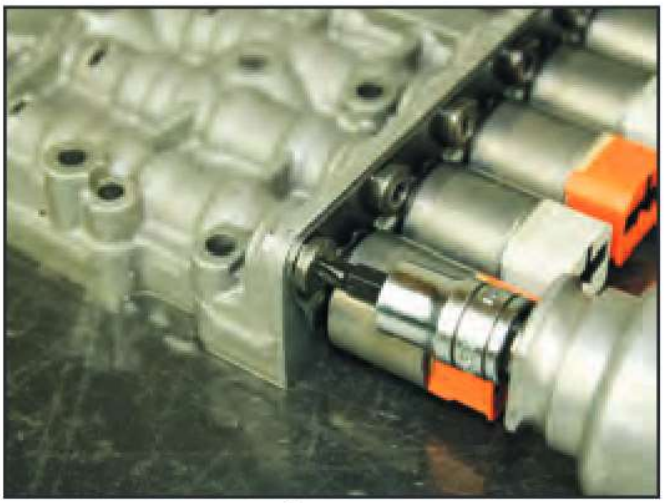

Figure 10

Figure 13

ZF8HP45 VALVE BODY

LOWER VALVE BODY

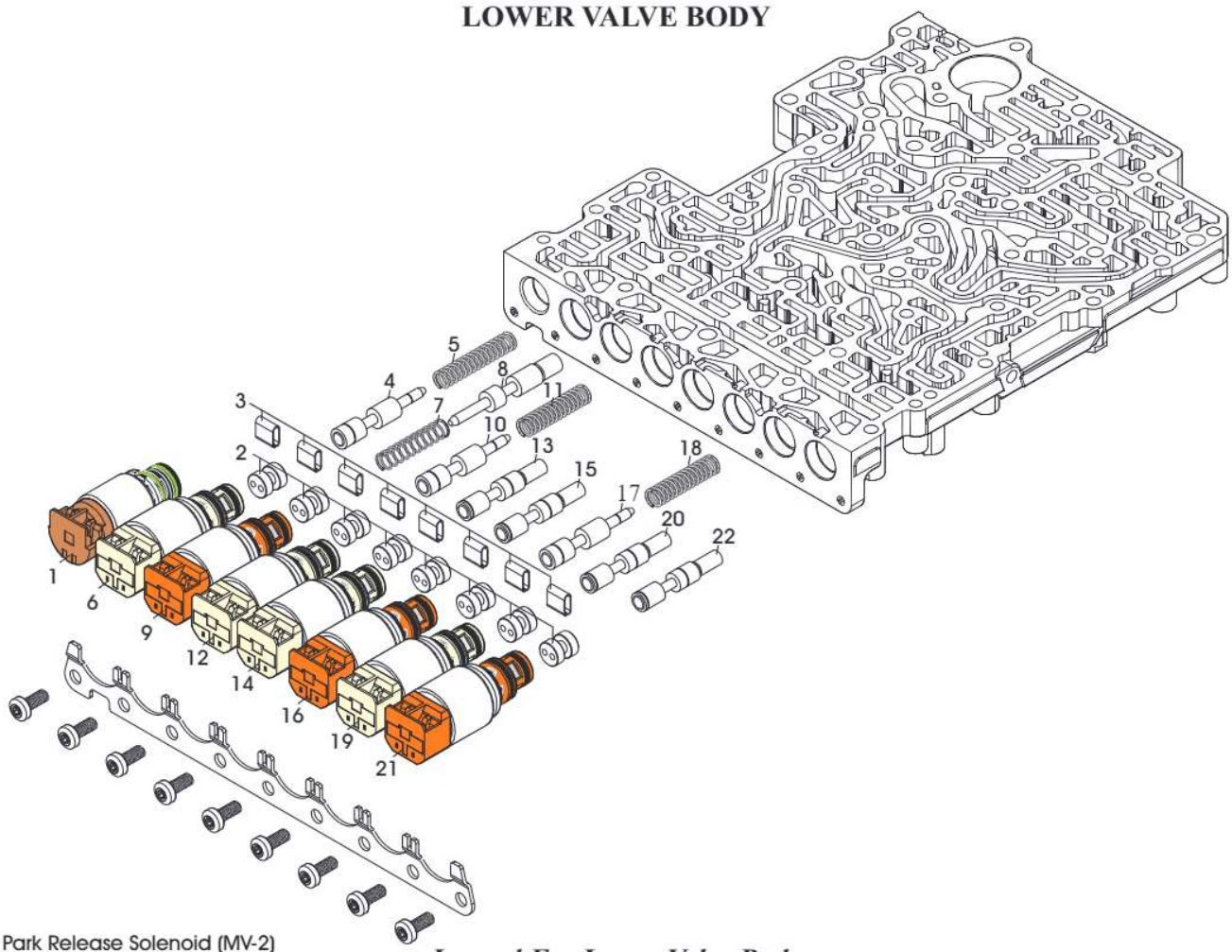

Legend For Lower Valve Body

1. Park Release Solenoid (MV-2)
2. Retainer
3. End Plug
4. Priming Valve
5. Priming Valve Spring
6. Line Pressure Solenoid (EDS-7)
7. Parking Pawl Release Valve Spring
8. Parking Pawl Release Valve
9. TCC Solenoid (EDS-2)
10. Clutch C Holding Valve
11. Clutch C Holding Valve Spring
12. Pressure Control Solenoid C (EDS-5)
13. Clutch C Regulating Valve
14. Pressure Control Solenoid E (EDS-4)
15. Clutch E Regulating Valve
16. Pressure Control Solenoid B (EDS-3)
17. Clutch E Holding Valve
18. Clutch E Holding Valve Spring
19. Pressure Control Solenoid D (EDS-6)
20. Clutch D Regulating Valve
21. Pressure Control Solenoid A (EDS-1)
22. Clutch A Regulating Valve

LOWER VALVE BODY SPRING SPECIFICATIONS

SPRING NUMBER 5	SPRING NUMBER 11
Free Length = 1.795"	Free Length = 1.554"
Spring Diameter = .352"	Spring Diameter = .372"
Wire Diameter = .042"	Wire Diameter = .042"
Approx Coils = 16	Approx Coils = 15
Color = (NONE)	Color = (NONE)
SPRING NUMBER 7	**SPRING NUMBER 18**
Free Length = 1.532"	Free Length = 1.554"
Spring Diameter = .354"	Spring Diameter = .372"
Wire Diameter = .032"	Wire Diameter = .042"
Approx Coils = 11	Approx Coils = 15
Color = (NONE)	Color = (NONE)

Copyright © 2017 ATSG

Figure 14

ZF8HP45 VALVE BODY

LOWER VALVE BODY

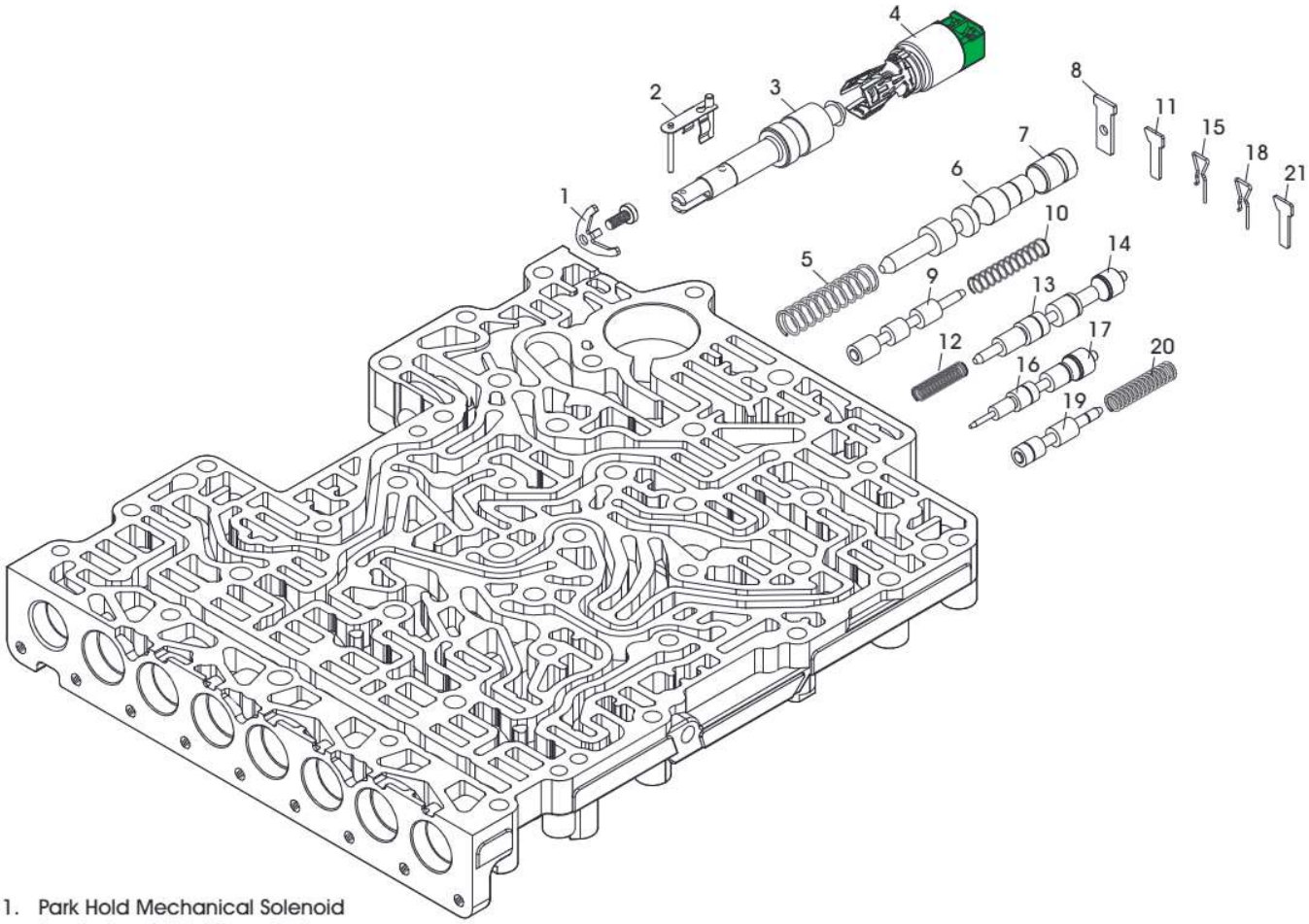

1. Park Hold Mechanical Solenoid Bracket and Hold Down Bolt
2. Park Release Piston to Range Sensor Clip
3. Park Release Piston
4. Park Hold Mechanical Solenoid (MV-3)
5. Main Line Pressure Regulator Valve Spring
6. Main Line Pressure Regulator Valve
7. Sleeve
8. Retainer
9. TCC Switching Valve
10. TCC Switching Valve Spring
11. Retainer
12. TCC Valve Spring
13. TCC Valve
14. End Plug
15. Wire Retainer
16. Clutch B Regulating Valve
17. End Plug
18. Wire Retainer
19. Clutch B Holding Valve
20. Clutch B Holding Valve Spring
21. Retainer

Legend For Lower Valve Body

LOWER VALVE BODY SPRING SPECIFICATIONS

SPRING NUMBER 5	SPRING NUMBER 12
Free Length = 2.192"	Free Length = 1.192"
Spring Diameter = .545"	Spring Diameter = .299"
Wire Diameter = .045"	Wire Diameter = .025"
Approx Coils = 11	Approx Coils = 15
Color = (NONE)	Color = (NONE)
SPRING NUMBER 10	**SPRING NUMBER 20**
Free Length = 1.816"	Free Length = 1.556"
Spring Diameter = .351"	Spring Diameter = .370"
Wire Diameter = .022"	Wire Diameter = .042"
Approx Coils = 12	Approx Coils = 15
Color = (NONE)	Color = (NONE)

Copyright © 2017 ATSG

Figure 15

ZF8HP45 VALVE BODY

UPPER VALVE BODY

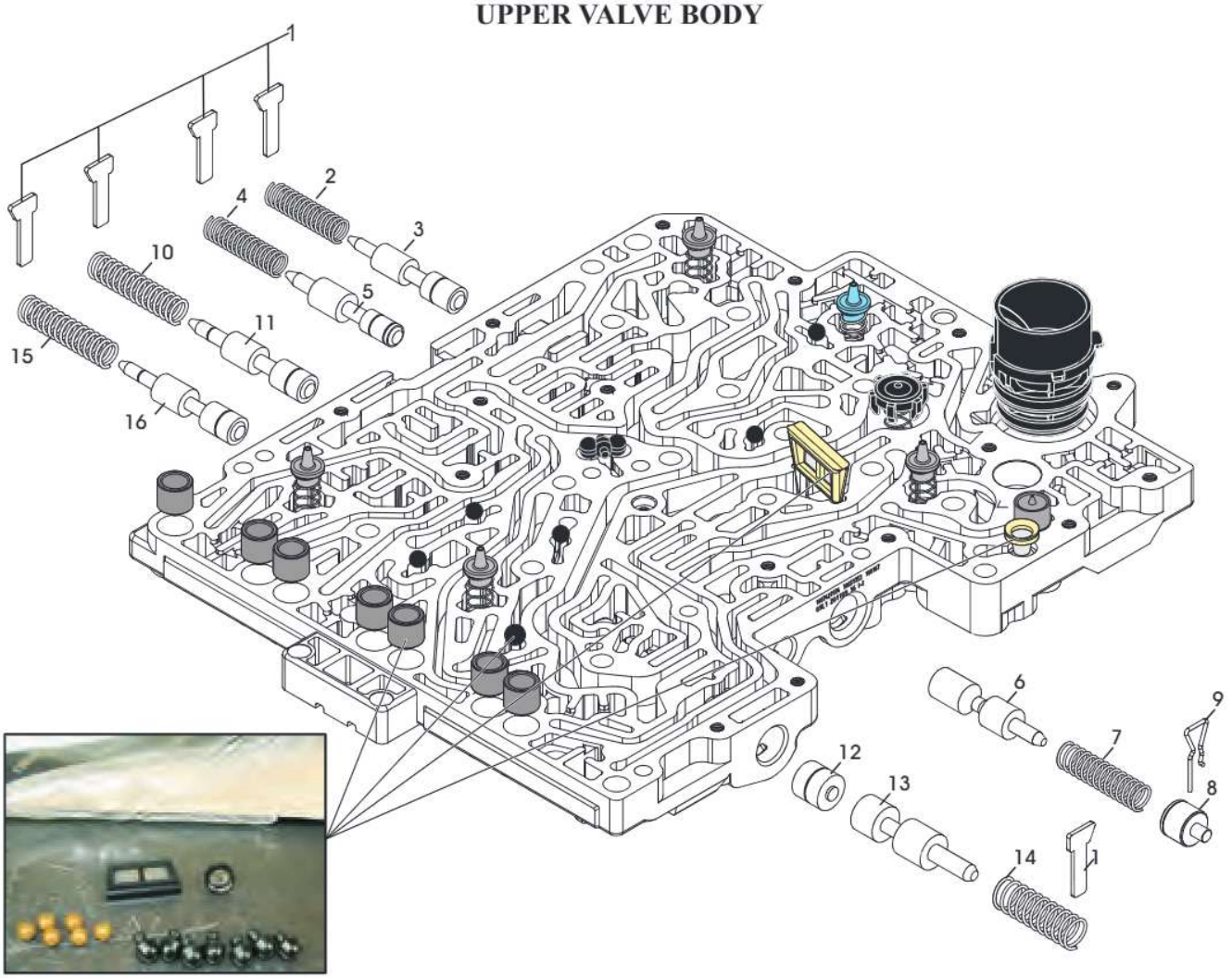

Replace all damper pedestals, check balls and filters

Legend For Upper Valve Body

1. Retainer
2. B Clutch Release Holding Valve Spring
3. B Clutch Release Holding Valve
4. NIC B Clutch Valve Spring
5. NIC B Clutch Valve
6. Torque Converter Pressure Valve
7. Torque Converter Pressure Valve Spring
8. End Plug
9. Wire Retainer
10. Clutch A Holding Valve Spring
11. Clutch A Holding Valve
12. Position Valve Plug
13. Position Valve
14. Position Valve Spring
15. Clutch D Holding Valve Spring
16. Clutch D Holding Valve

UPPER VALVE BODY SPRING SPECIFICATIONS

SPRING NUMBER 2	SPRING NUMBER 7	SPRING NUMBER 14
Free Length = 1.275"	Free Length = 1.545"	Free Length = 1.373"
Spring Diameter = .340"	Spring Diameter = .374"	Spring Diameter = .450"
Wire Diameter = .034"	Wire Diameter = .0345	Wire Diameter = .039"
Approx Coils = 16	Approx Coils = 14	Approx Coils = 11
Color = (NONE)	Color = (NONE)	Color = (NONE)
SPRING NUMBER 4	**SPRING NUMBER 10**	**SPRING NUMBER 15**
Free Length = 1.370"	Free Length = 1.560"	Free Length = 1.560"
Spring Diameter = .373"	Spring Diameter = .370"	Spring Diameter = .370"
Wire Diameter = .038"	Wire Diameter = .042"	Wire Diameter = .042"
Approx Coils = 14	Approx Coils = 15	Approx Coils = 15
Color = (NONE)	Color = (NONE)	Color = (NONE)

Copyright © 2017 ATSG

Figure 16

ZF8HP45 VALVE BODY

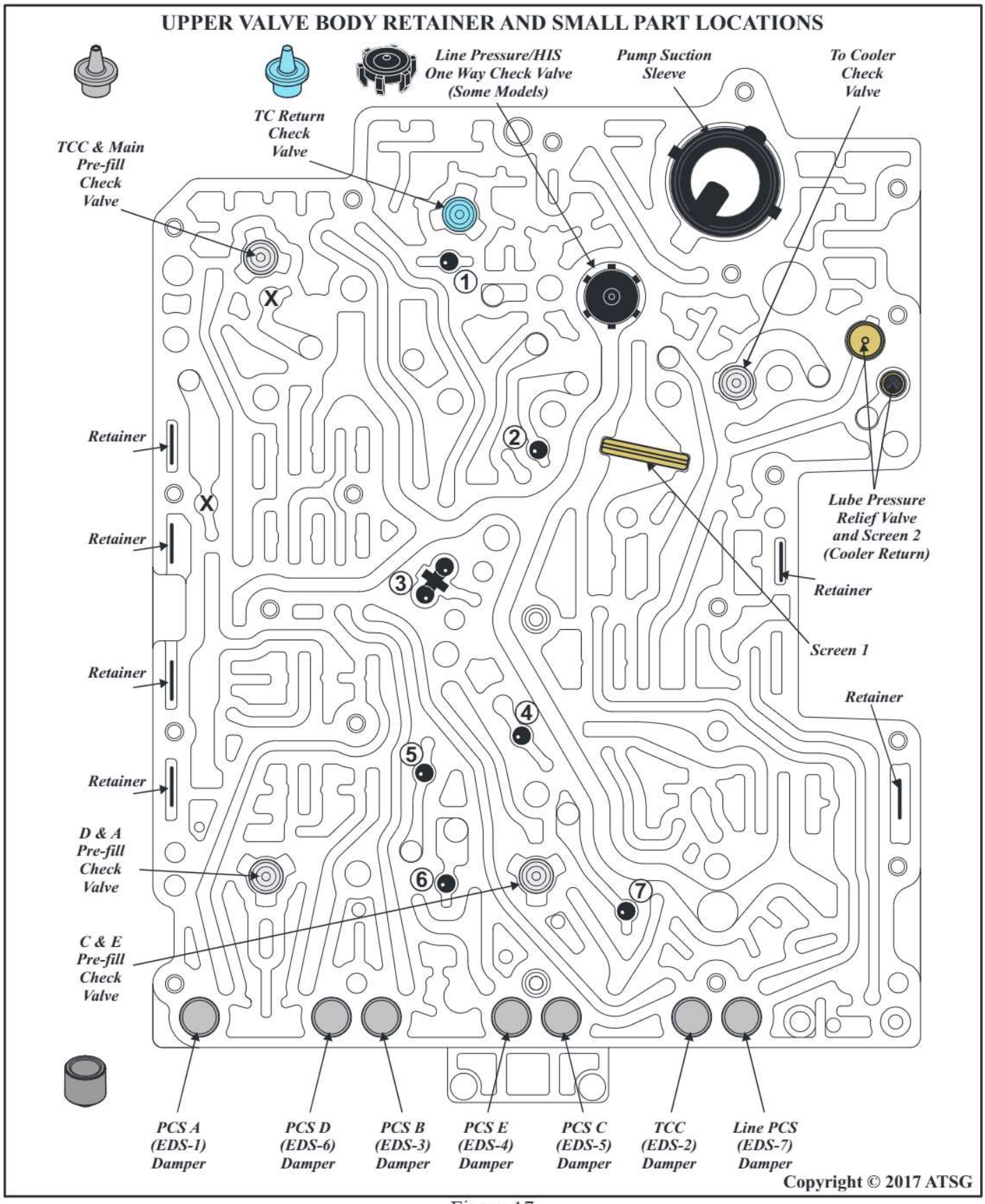

Copyright © 2017 ATSG

Figure 17

ZF8HP45 VALVE BODY

UPPER VALVE BODY
SMALL DETAILS

Check Ball ① In the "TCC Pressure Valve and Pre-Fill" Circuit
Check Ball ② In the "TC Charge and TCC Apply" Circuit
Check Ball ③ "C and E" Clutch Rocker Ball
Check Ball ④ In the "C, D and E" Clutch Apply Valve Circuit
Check Ball ⑤ In the "D" Clutch Apply/Release Circuit
Check Ball ⑥ In the "E" Clutch Apply/Release Circuit
Check Ball ⑦ In the "C" Clutch Apply/Release Circuit

Screen 1- Filters Line pressure from the Pressure Regulator Valve to the TCC Pressure Valve
2- Filters Cooler Return

To Cooler Check Valve- Connected to the Cooler circuit, the TCC Pressure Valve and Switching Valve.

TCC & Main Pre-Fill Check Valve- Connected to Check Ball 1 circuit, TCC Apply Pre-Fill and all Clutch Pre-Fill circuits and Check Valves.

Clutch and Brake Pre-fill Check Valves- Meters Pre-fill pressure supplied by the TCC Pressure Valve.

Copyright © 2017 ATSG

Figure 18

ZF8HP45 VALVE BODY

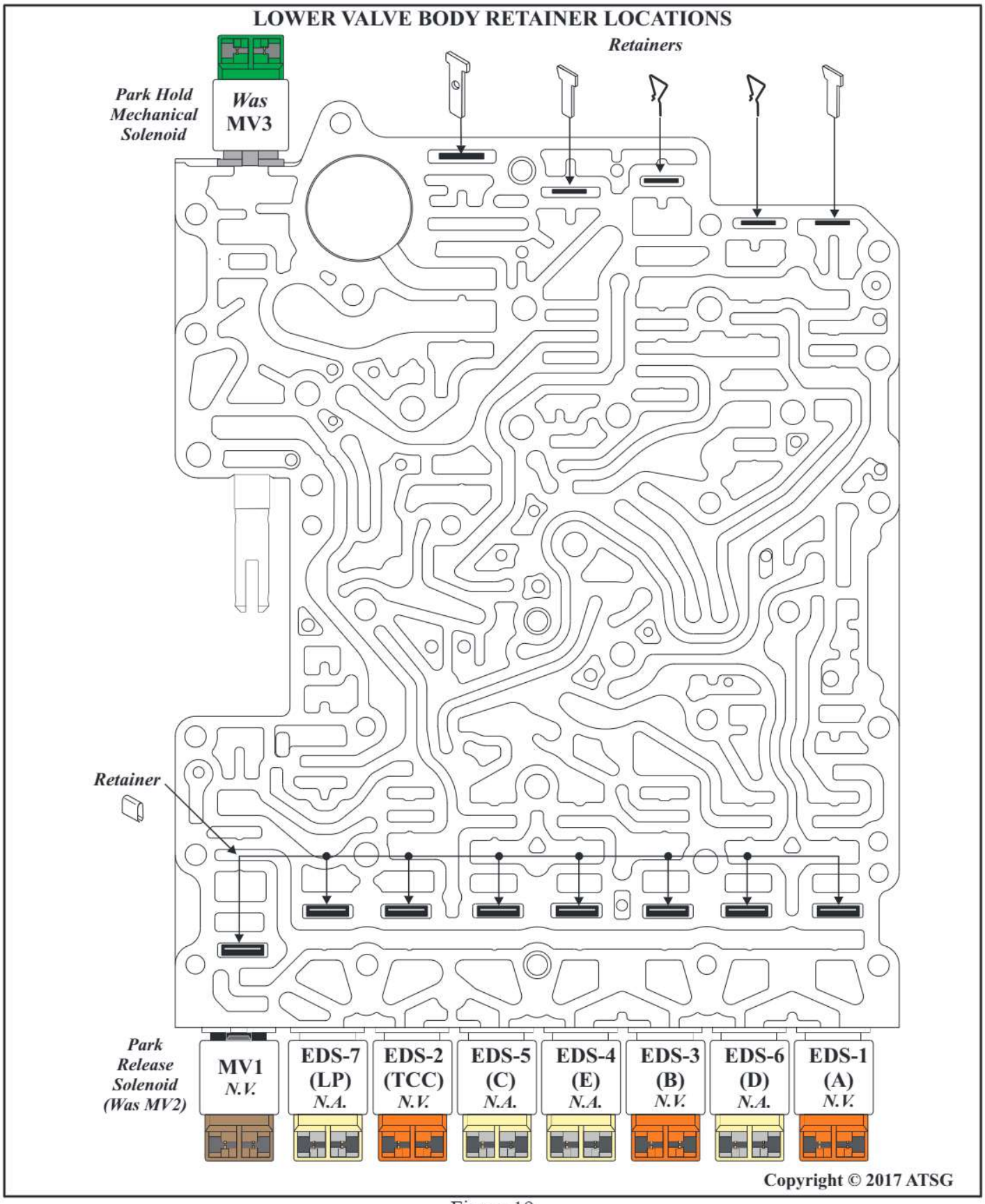

Figure 19

ZF8HP45 VALVE BODY

LOWER VALVE BODY TO CASE PASSAGE IDENTIFICATION

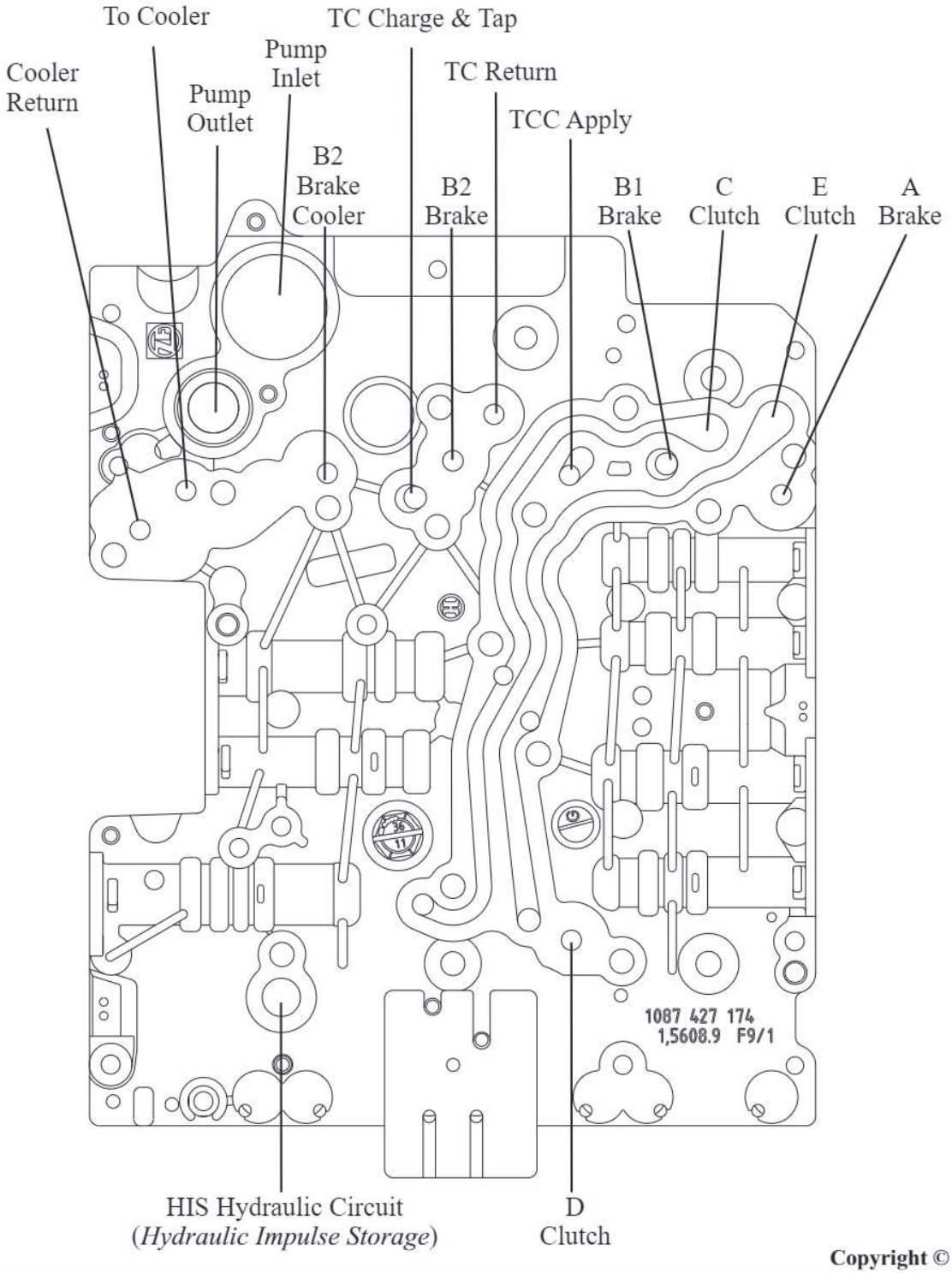

Copyright © 2017 ATSG

Figure 20

ZF8HP55 VALVE BODY

M-SHIFT LOWER VALVE BODY VALVE IDENTIFICATION (*non-HIS*)

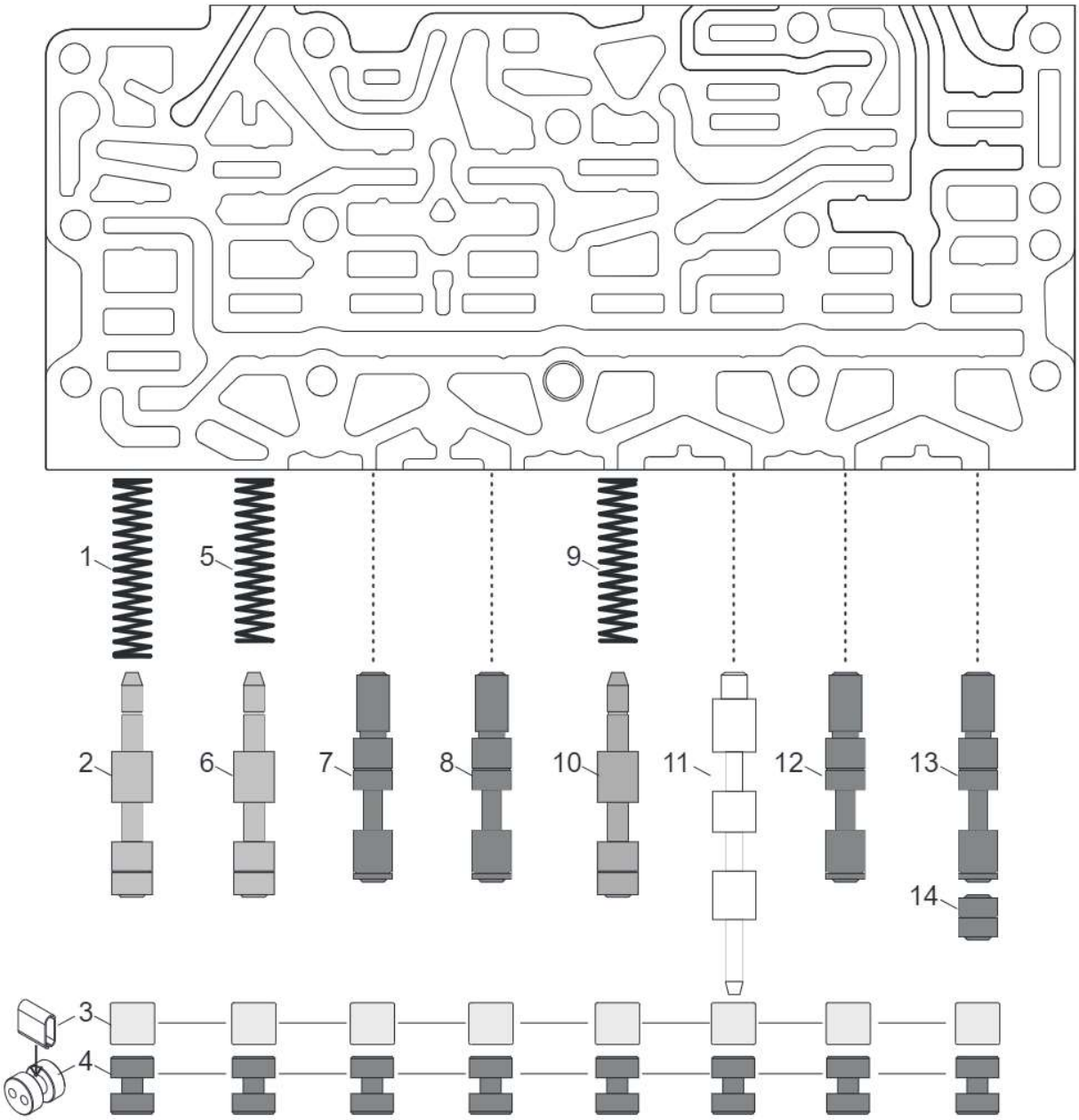

1. 1.760 x .360 x .042 x 16
2. Pressure Reducing Valve
3. Bore Plug Retainer
4. Bore Plug
5. 1.625 x .375 x .042 x 15
6. Holding Valve C
7. Clutch Valve C
8. Clutch Valve E
9. 1.618 x .372 x .042 x 15
10. Holding Valve E
11. SV1 Stationary Valve (55 only)
12. Clutch Valve D
13. Clutch Valve A
14. Clutch Valve A Shift Plug

Copyright © 2017 ATSG

Figure 21

ZF8HP55 VALVE BODY

M-SHIFT LOWER VALVE BODY VALVE IDENTIFICATION (*non-HIS*)

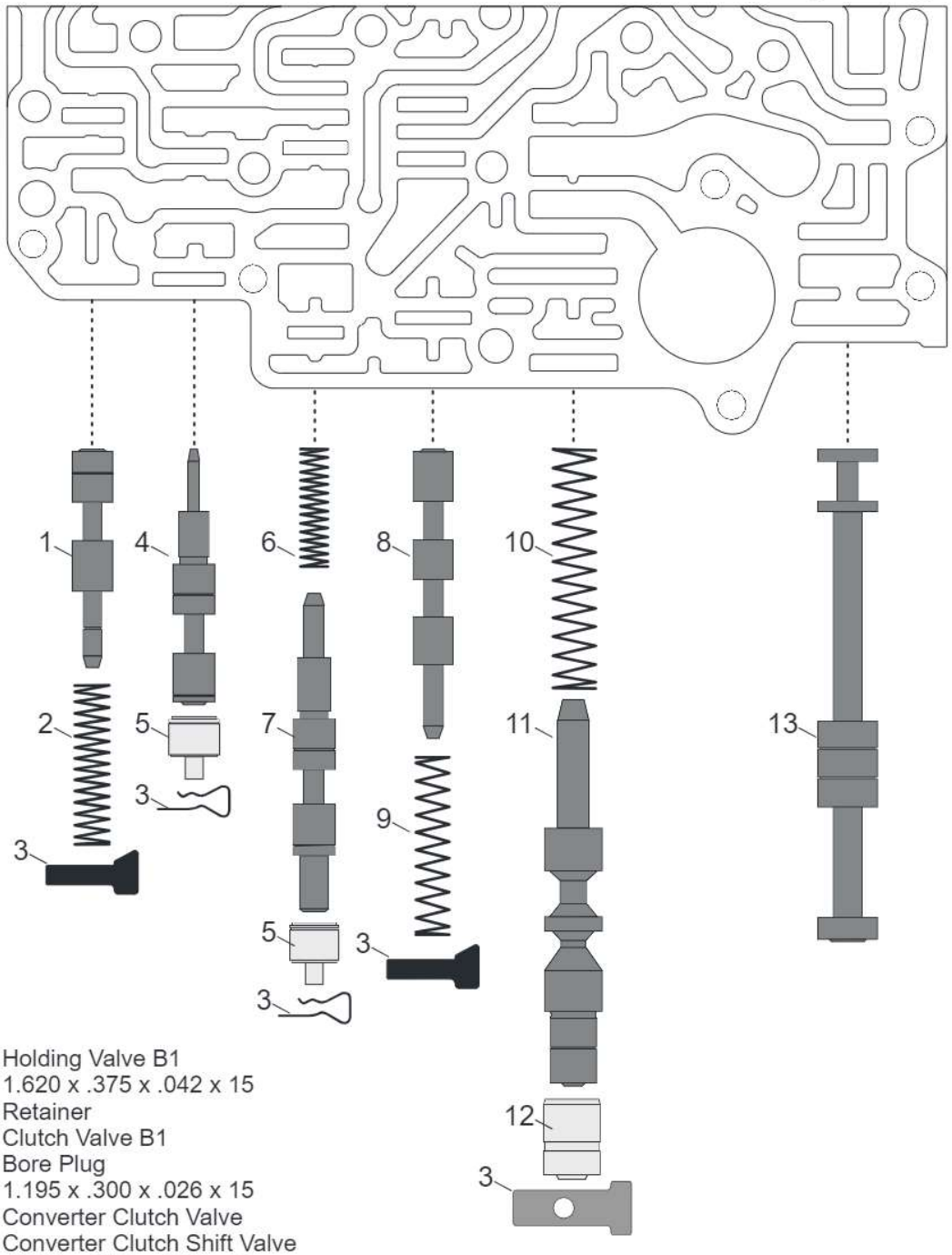

1. Holding Valve B1
2. 1.620 x .375 x .042 x 15
3. Retainer
4. Clutch Valve B1
5. Bore Plug
6. 1.195 x .300 x .026 x 15
7. Converter Clutch Valve
8. Converter Clutch Shift Valve
9. 1.780 x .358 x .024 x 12
10. 2.417 x .557 x .051 x 14
11. Pressure Regulator Valve
12. PRV Sleeve
13. Manual Valve (M-Shift)

Copyright © 2017 ATSG

Figure 22

ZF8HP55 VALVE BODY

M-SHIFT UPPER VALVE BODY VALVE IDENTIFICATION (*non-HIS*)

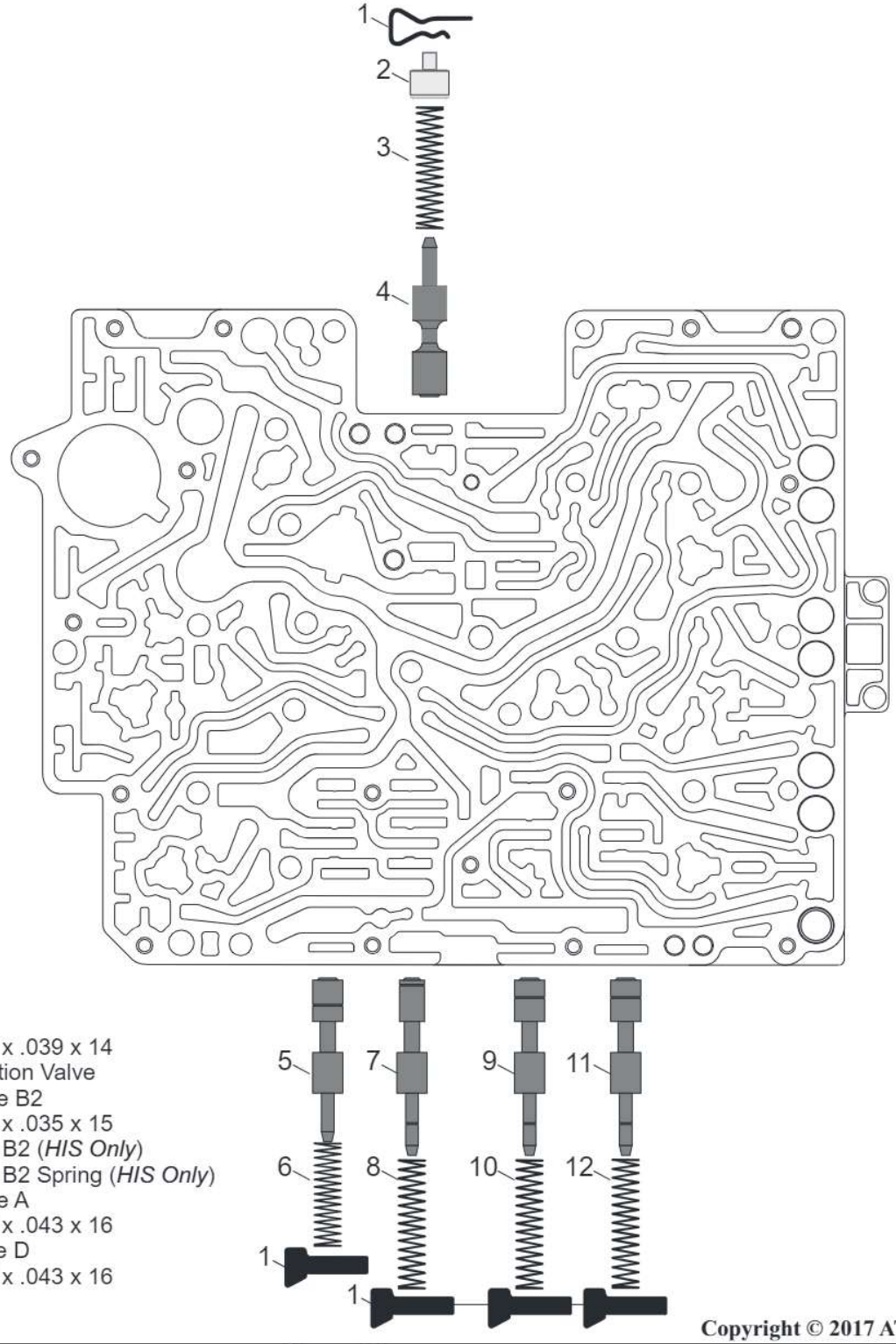

1. Retainer
2. Bore Plug
3. 1.438 x .368 x .039 x 14
4. TCC/Lubrication Valve
5. Holding Valve B2
6. 1.266 x .344 x .035 x 15
7. Clutch Valve B2 (*HIS Only*)
8. Clutch Valve B2 Spring (*HIS Only*)
9. Holding Valve A
10. 1.596 x .372 x .043 x 16
11. Holding Valve D
12. 1.596 x .372 x .043 x 16

Copyright © 2017 ATSG

Figure 23

ZF8HP55 VALVE BODY

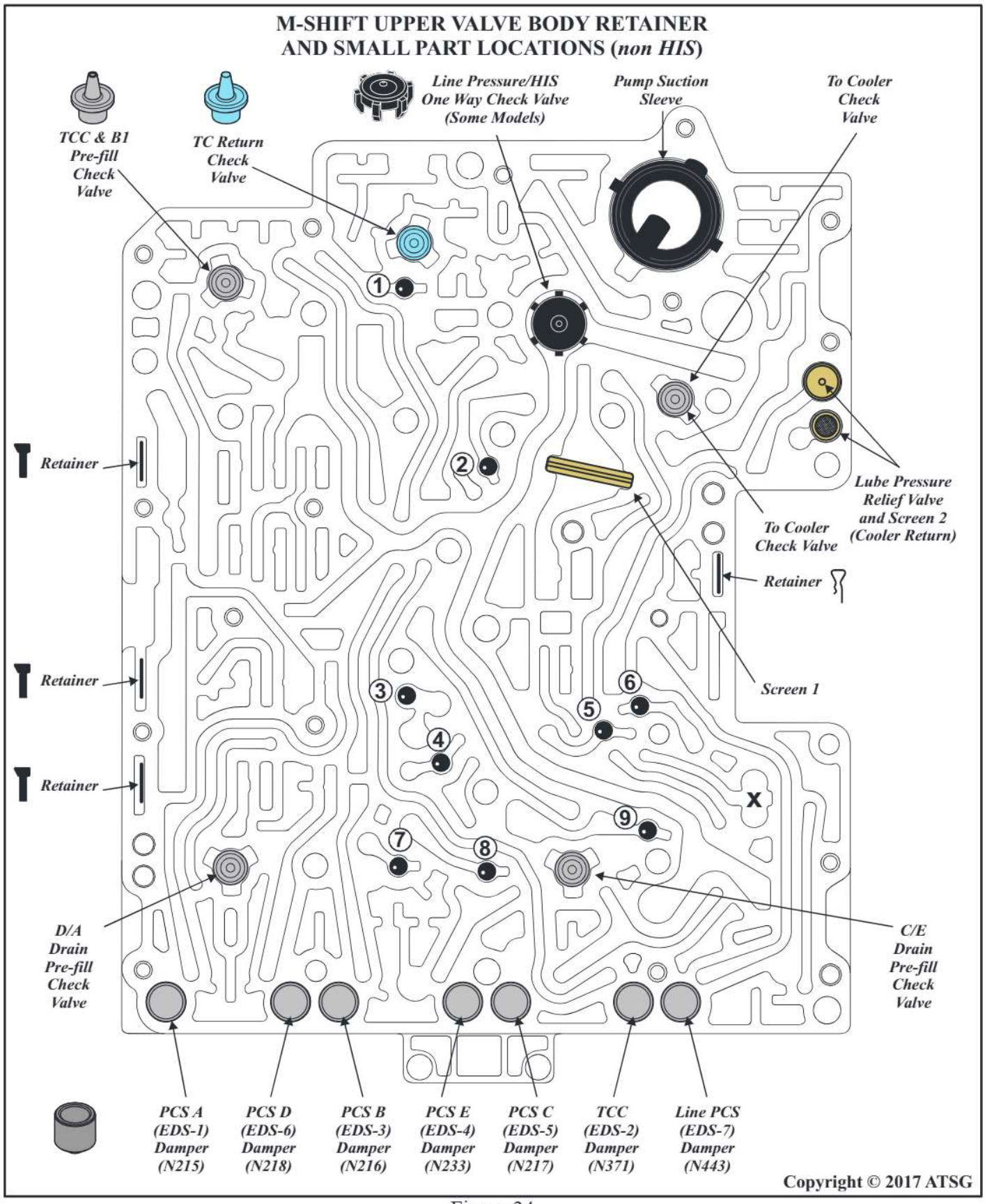

Figure 24

ZF8HP55 VALVE BODY

M-SHIFT UPPER VALVE BODY SMALL DETAILS

Check Ball ① TCC Pressure Orifice Ball
Check Ball ② TCC Apply Orifice Ball
Check Ball ③ Forward Reverse Shuttle Ball
Check Ball ④ Forward Feed to the E Holding Valve
Check Ball ⑤ Forward Feed to the E Regulator Valve
Check Ball ⑥ Forward Feed to the C Regulator Valve
Check Ball ⑦ D Clutch Apply/Release Circuit
Check Ball ⑧ E Clutch Apply/Release Circuit
Check Ball ⑨ C Clutch Apply/Release Circuit

Screen 1- Filters Line pressure from the Pressure Regulator Valve to the TCC Pressure Valve
2- Filters Cooler Return

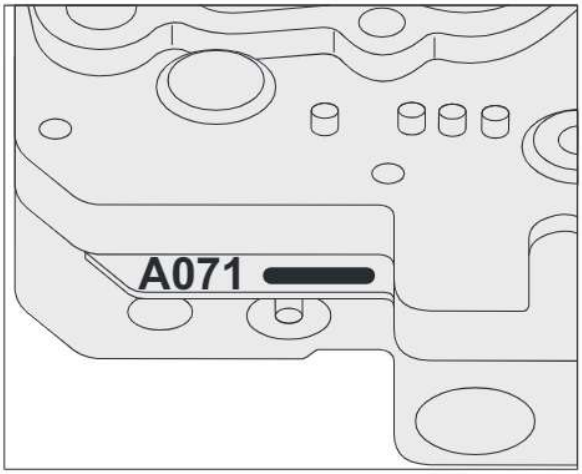

SPACER PLATE ID

054 = ZF8HP55 ***HIS*** "M" Shift - Part # on plate: 1087 327 189 ZFS

071 = ZF8HP55 ***HIS & non-HIS*** "M" Shift - Part # on plate: 1087 327 221 ZFS

Copyright © 2017 ATSG

Figure 25

ZF8HP55 VALVE BODY

SOLENOID IDENTIFICATION AND RETAINER LOCATIONS (*non-HIS*)

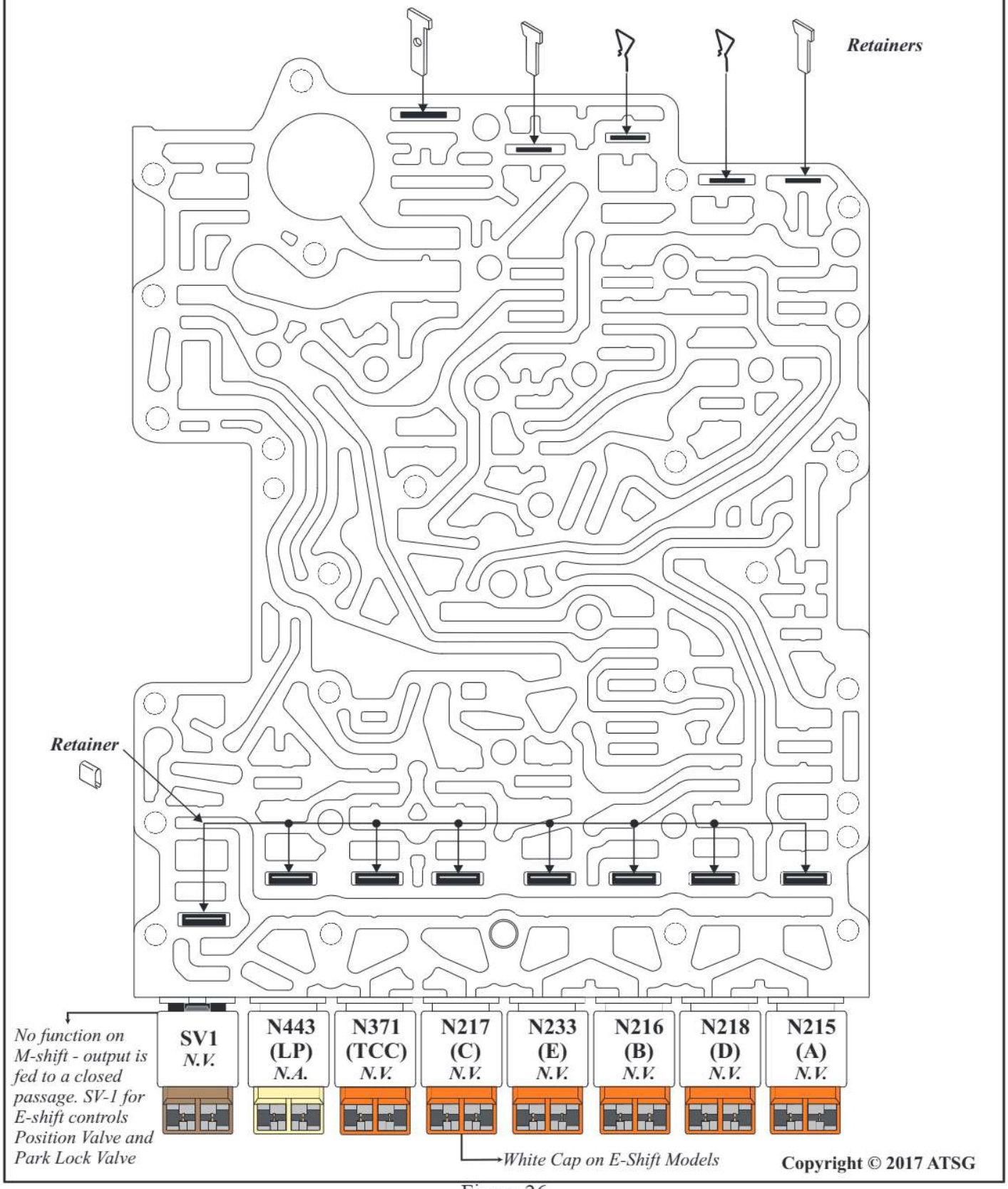

Copyright © 2017 ATSG

Figure 26

ZF8HP55 VALVE BODY

LOWER VALVE BODY TO CASE PASSAGE IDENTIFICATION

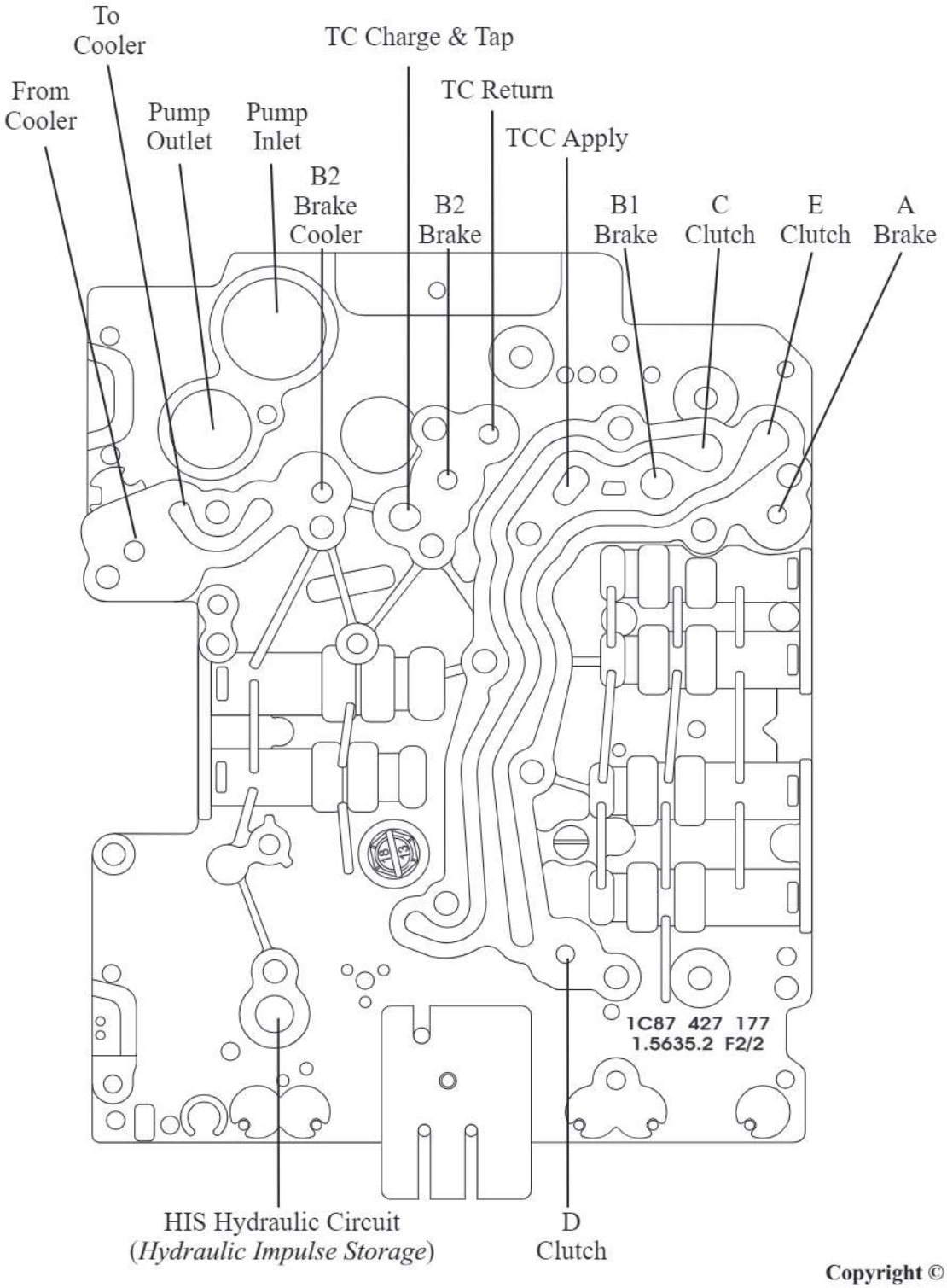

Copyright © 2017 ATSG

Figure 27

MECHATRONIC REASSEMBLY

Figure 28

Figure 29

MECHATRONIC REASSEMBLY

12. Inspect and replace all damaged damper piston pedestals (figure 28). Most rebuild kits will supply replacement pedestals, check balls and filters as seen in figure 29.

13. Use figure 17 (ZF8HP45) or 24 (ZF8HP55) to install all check valves, check balls and filters in their proper location.

14. Replace O-rings on all solenoids, lubricate with gel and install into the valve body using figures 19 and 26 as a guide. Tighten all solenoid bracket hold down bolts to 8 Nm (70 in lbs).

15. Replace the O-rings on the pump suction sleeve. Lubricate it with gel and install it into the channel plate aligning the slot with the channel in the casting (figure 30).

16. Carefully place a new separator plate onto the channel plate ensuring all the check valves are in place and that it fits around the pump suction sleeve correctly (figure 31).

17. While holding the separator plate securely in place, flip the channel plate and separator plate over as a unit and carefully fit it onto the valve body (figure 32).

Figure 30

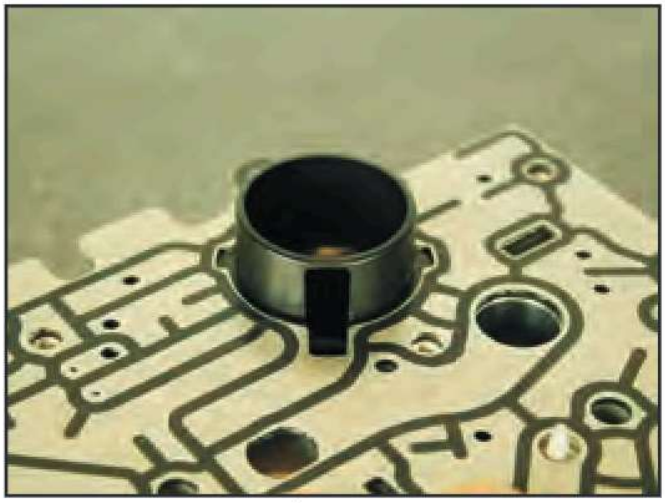

Figure 31

MECHATRONIC REASSEMBLY

18. Holding both halves securely to the spacer plate, flip the assembly over.

19. Locate one of the 1.573" x .191" length #27 Torx bolt (figure 33). Install it finger tight to hold both halves together (figure 34).

20. For the exception of the three hold down bolts for the Mechanical Park Lock solenoid harness (*if so equipped*), install all the 1.573" x .191" length #27 Torx bolt finger tight (figure 35).

21. Flip the assembly over again and carefully install the Mechatronic electronic unit onto the valve body assembly inserting the contact blades into the solenoids (figure 36).

Figure 34

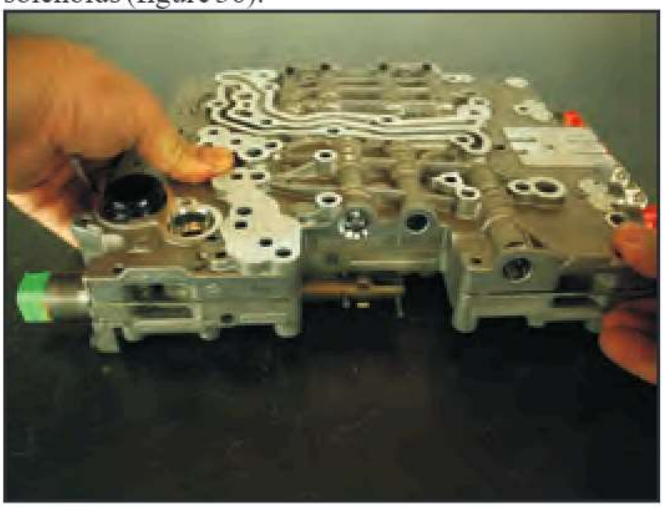

Figure 32

Figure 35

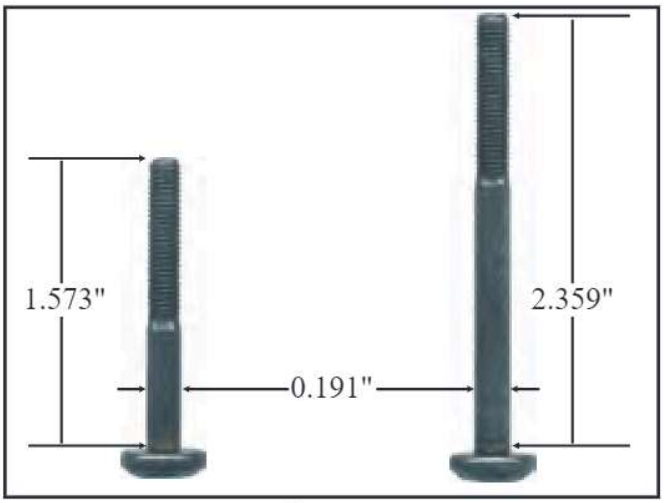

Figure 33

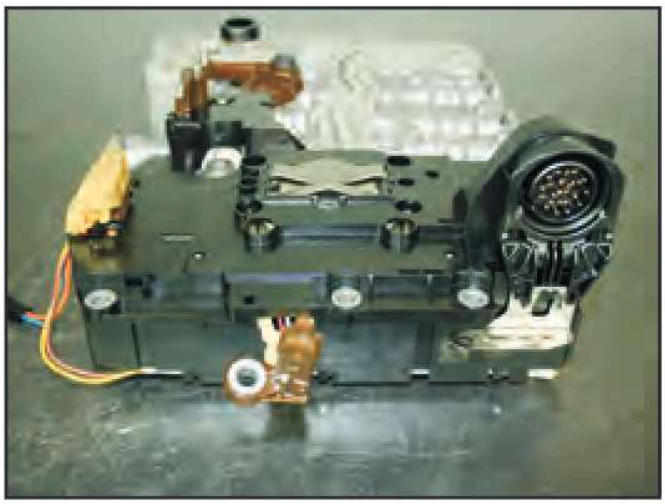

Figure 36

MECHATRONIC REASSEMBLY

Figure 37

22. If so equipped, plug in the Park Hold Mechanical Solenoid (figure 37) by first setting the harness into place installing three 1.573" x .191" length #27 Torx bolts finger tight. Once in place, ensure that the Park Hold Mechanical piston can freely move (figures 38 and 39).

23. Install the remaining five 2.359" x .191" length #27 Torx bolts through the valve body and into the Mechatronic electronic unit finger tight. Then tighten all bolts to 8 Nm (70 in lbs), see figure 40.

24. Install two new O-rings onto the fluid transfer port, lubricate with gel. Install it into the valve body now or wait to install it in the case at assembly time (figure 41).

Figure 38

Figure 40

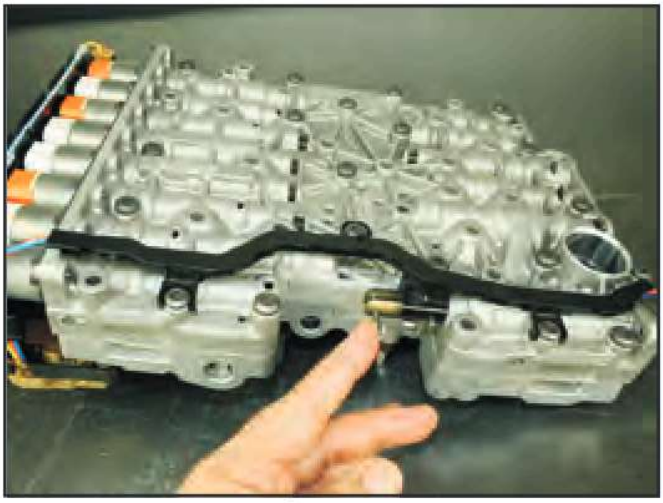

Figure 39

Figure 41

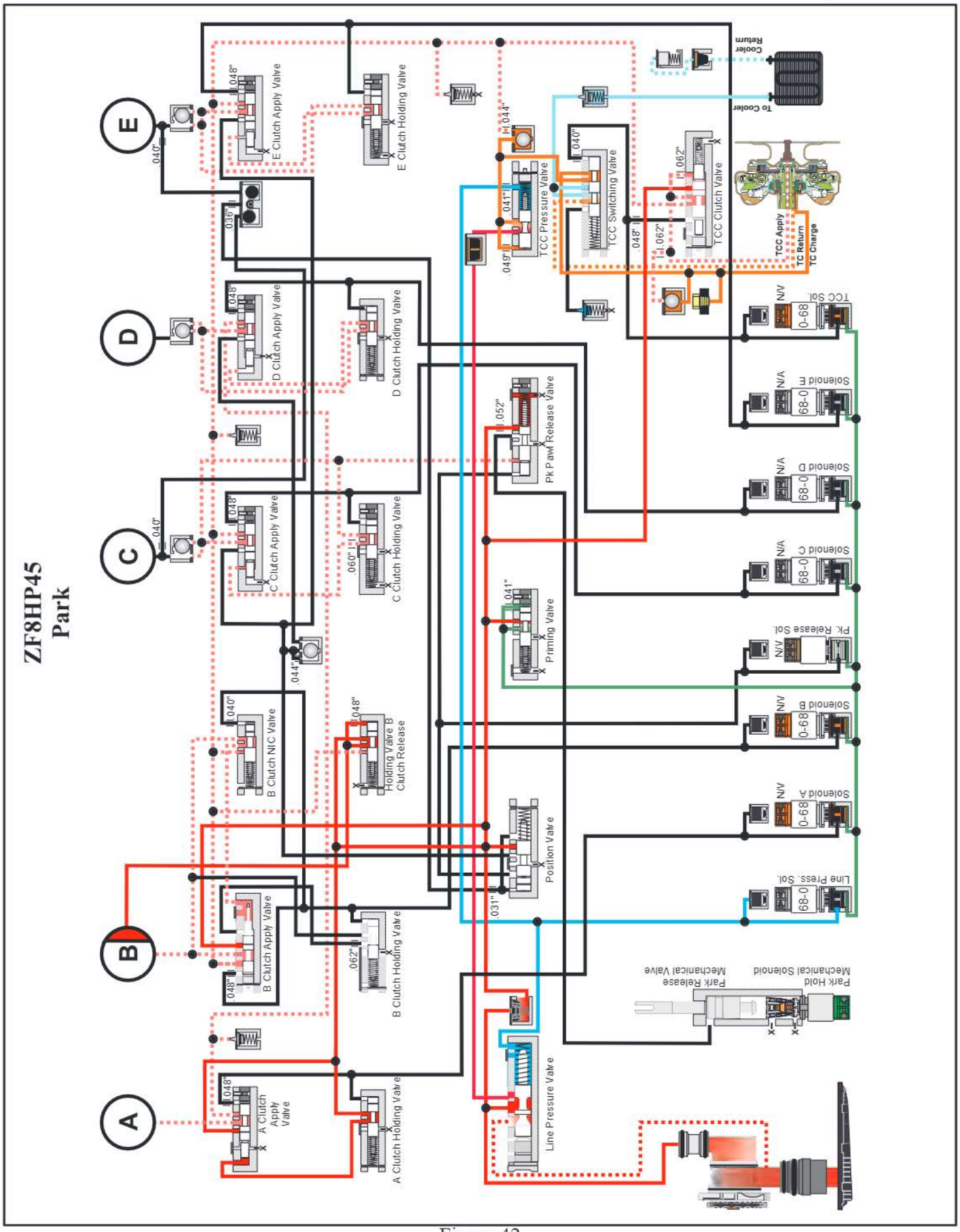
ZF8HP45
Park
A
B
C
D
E
.040"
.048"
.036"
.044"
.060"
.062"
.041"
.052"
.031"
E Clutch Apply Valve
E Clutch Holding Valve
D Clutch Apply Valve
D Clutch Holding Valve
C Clutch Apply Valve
C Clutch Holding Valve
B Clutch N/C Valve
Holding Valve B Clutch Release
B Clutch Apply Valve
B Clutch Holding Valve
A Clutch Apply Valve
A Clutch Holding Valve
TCC Pressure Valve
TCC Switching Valve
TCC Clutch Valve
Pk Paw Release Valve
Priming Valve
Position Valve
Line Pressure Valve
Cooler Return
To Cooler
TCC Apply
TC Return
TC Charge
TCC Sol.
Solenoid E
Solenoid D
Solenoid C
Pk. Release Sol.
Solenoid B
Solenoid A
Line Press. Sol.
N/A
N/V
0-68
Park Hold Mechanical Solenoid
Park Release Mechanical Valve

Figure 42

BRAKE AND CLUTCH REBUILD

D CLUTCH ASSEMBLY

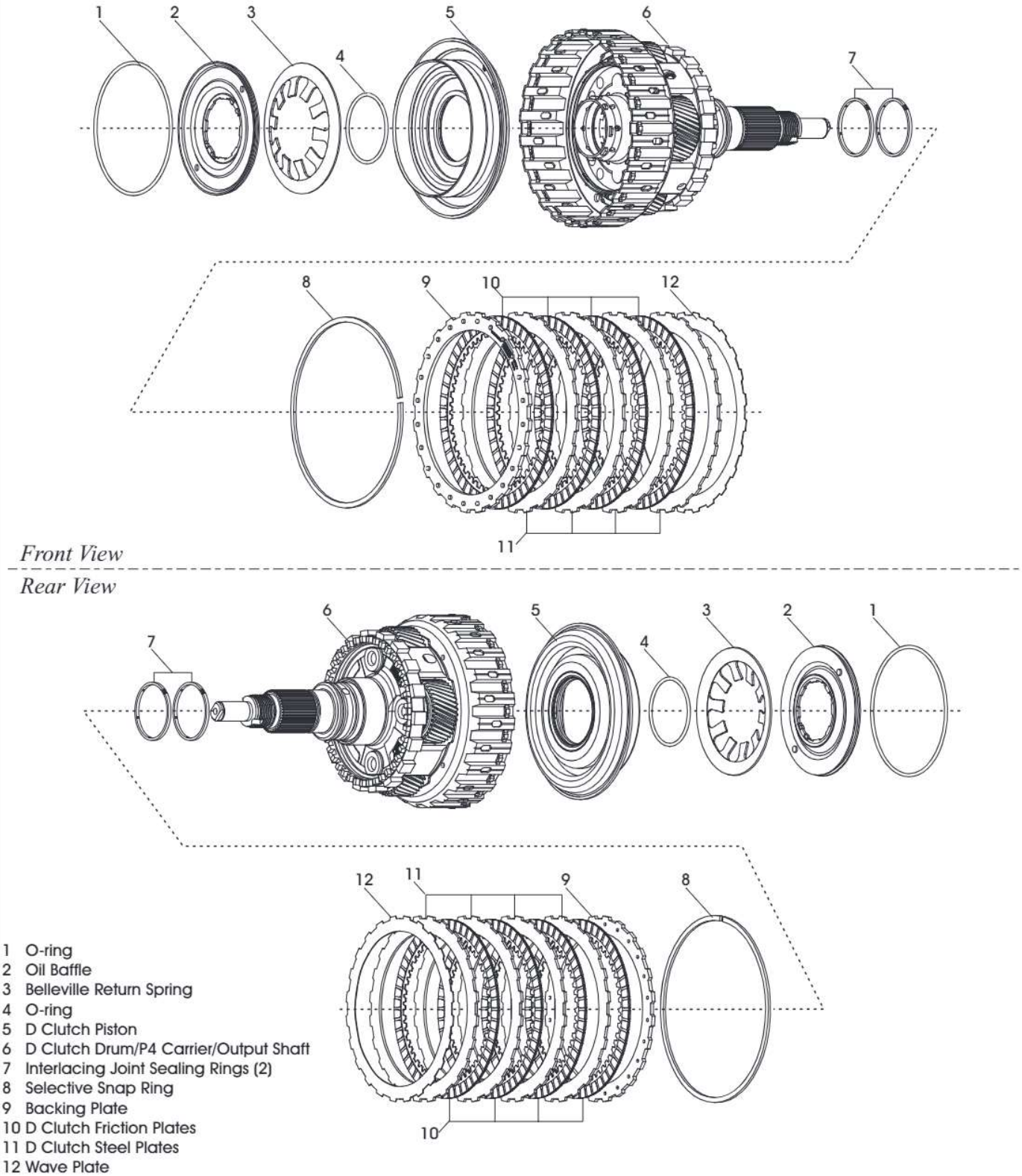

1 O-ring
2 Oil Baffle
3 Belleville Return Spring
4 O-ring
5 D Clutch Piston
6 D Clutch Drum/P4 Carrier/Output Shaft
7 Interlacing Joint Sealing Rings (2)
8 Selective Snap Ring
9 Backing Plate
10 D Clutch Friction Plates
11 D Clutch Steel Plates
12 Wave Plate

Copyright © 2017 ATSG

Figure 1

BRAKE AND CLUTCH REBUILD

"D" CLUTCH REBUILD

1. Beginning with the clutch assembly furthest to the rear of the transmission, use figure 1 on page 70 as a guide to cleaning, inspecting and rebuilding the D clutch assembly. The oil baffle (#2) and piston (#5) contain one rubber O-ring each to be replaced (#1 & #4). The D clutch drum has two interlacing joint sealing rings (#7) that will also need to be replaced.

2. Two areas of the D-clutch drum assembly should be inspected before rebuilding begins; a needle bearing inside the assembly below the pinion gears (figure 2) and the pinion gears themselves (figure 3). Both should be inspected for roughness. Inspect the bearing by applying pressure to the bearing with your fingers and rotate the race. If roughness is felt, clean the bearing and check again. If roughness continues to be felt, the drum assembly will need to be replaced. Similarly, rotate each pinion gear with some pressure inspecting the gear for wobble and roughness. Also check for excessive play due to worn washers. Approximately 0.025" (0.635mm) of play is seen with a new assembly. Replace drum if necessary.

3. Inspect the molded piston secured to the inside of the D clutch drum assembly (figure 4 - 8HP55 is shown). If the rubber has been compromised in any way, the drum assembly will need to be replaced. A replacement piston may come with the kit (figure 5), but it is very difficult to replace. If attempted, centering the piston is imperative.

Figure 3

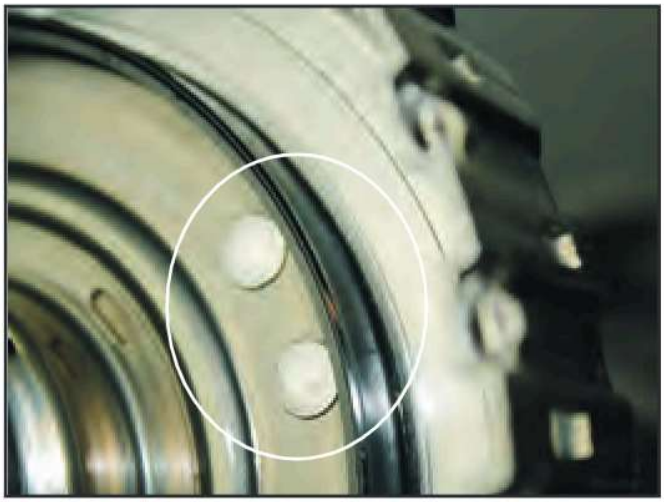

Figure 4

Figure 2

Figure 5

BRAKE AND CLUTCH REBUILD

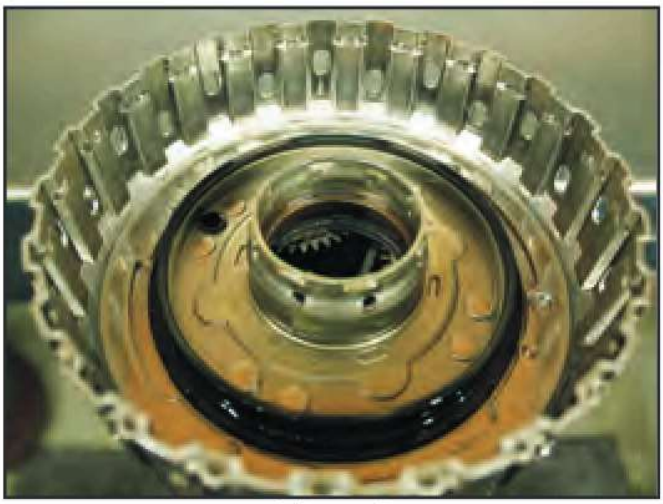

Figure 6

4. Lubricate the drum's inside molded piston with gel (figure 6) as well as the new O-ring previously installed into the D clutch piston and fit the piston into the drum (figure 7).

5. Install the belleville spring as shown in figure 8. Then place the oil guide on top of the belleville spring (figure 9) and bring the drum to the press.

6. Face the smallest lug on the drum towards yourself. Align the slots in the oil guide to the lugs on the drum with the round notch in the piston facing yourself. Carefully press the oil guide down and verify that the lugs on the drum will safely pass through the slots in the oil guide (figure 10).

Figure 7

Figure 9

Figure 8

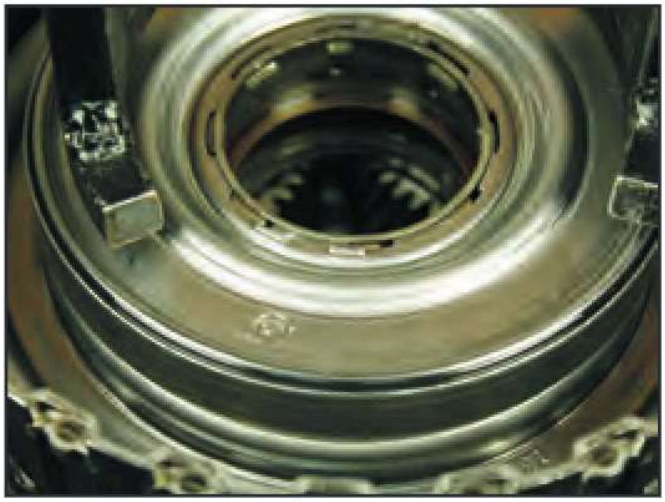

Figure 10

BRAKE AND CLUTCH REBUILD

"D" CLUTCH REBUILD

7. Once the slots in the oil guide have passed the lugs on the drum, carefully use a punch or screwdriver and tap the guide into place using the round notch provided in the guide. Tap until the slots in the guide are between the lugs allowing the lugs on the drum to retain the guide (figure 11). When the tension on the oil guide is released, the smallest lug on the drum should be into a designated recess in the oil guide, preventing it from spinning out of position.

8. Beginning with the wave plate, alternately install the steel plates and pre-soaked friction plates into the D clutch drum (figure 12).

9. Install the D clutch backing plate (figure 13)

10. Integral to the backing plate are snap ring retaining posts. To install the snap ring it will be necessary to press down onto the backing plate to give the snap ring the clearance needed to pass these posts and into the drum groove (figure 14).

11. Clutch clearance specifications for the D clutch using new pre-soaked frictions are 1.37mm (0.054") to 1.66mm (0.065").

12. For additional specifications and for adjustment procedures refer to pages 86 through 89.

Figure 12

Figure 13

Figure 11

Figure 14

BRAKE AND CLUTCH REBUILD

C CLUTCH ASSEMBLY

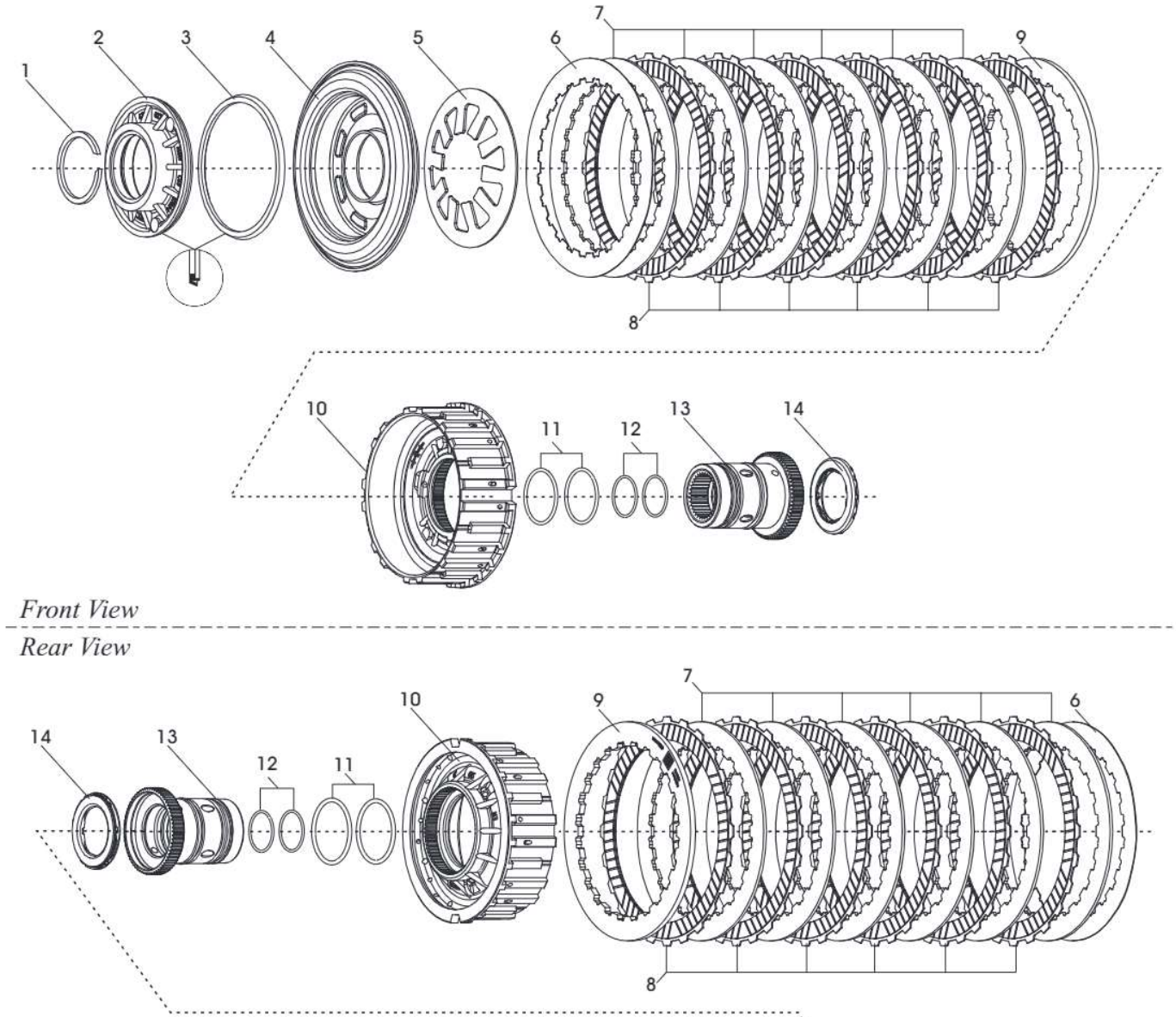

1 Snap Ring
2 C Clutch Guide
3 Lip Seal
4 C Clutch Piston
5 Belleville Return Spring
6 Wave Plate
7 C Clutch Steel Plates
8 C Clutch Friction Plates
9 Selective Backing Plate
10 C Clutch Hub
11 Outer O-rings (2)
12 Inner O-rings (2)
13 C Clutch Shaft
14 Closed Face Needle Bearing

Copyright © 2017 ATSG

Figure 15

BRAKE AND CLUTCH REBUILD

"C" CLUTCH REBUILD

13. The next clutch assembly up from the D clutch is the C Clutch. Use figure 15 on page 74 as a guide to cleaning, inspecting and rebuilding the C clutch assembly.

14. Install four new O-rings on the C clutch shaft (inside and out) and lubricate with gel (figure 16). Then insert the C clutch shaft into the hub (figure 17) followed by the belleville spring (figure18).

15. Install the backing plate onto the hub (figure 19) and then alternately install pre-soaked friction and steel plates ending with a wave plate (figure 20).

Figure 18

Figure 16

Figure 19

Figure 17

Figure 20

BRAKE AND CLUTCH REBUILD

Figure 21

Figure 22

16. Inspect the molded rubber on the C clutch piston for tears, separation, shrinking or hardness and replace if necessary.

17. Lubricate the molded seal as well as in the inside center of the piston for the O-ring on the hub. Install the good or new C clutch molded piston into the hub (figure 21).

18. Install a new lip seal into the C clutch guide and lubricate the lip seal and inside center of the guide with gel for the O-ring on the hub (figure 22).

19. Install the guide into the piston (figure 23).

20. Using a suitable press, carefully compress the assembly and install the retaining snap ring (figure 24).

21. Clutch clearance specifications for the C clutch using new pre-soaked frictions are 1.62mm (0.064") to 2.01mm (0.079").

22. For additional specifications and for adjustment procedures refer to pages 86 through 89.

Figure 23

Figure 24

BRAKE AND CLUTCH REBUILD

E CLUTCH ASSEMBLY

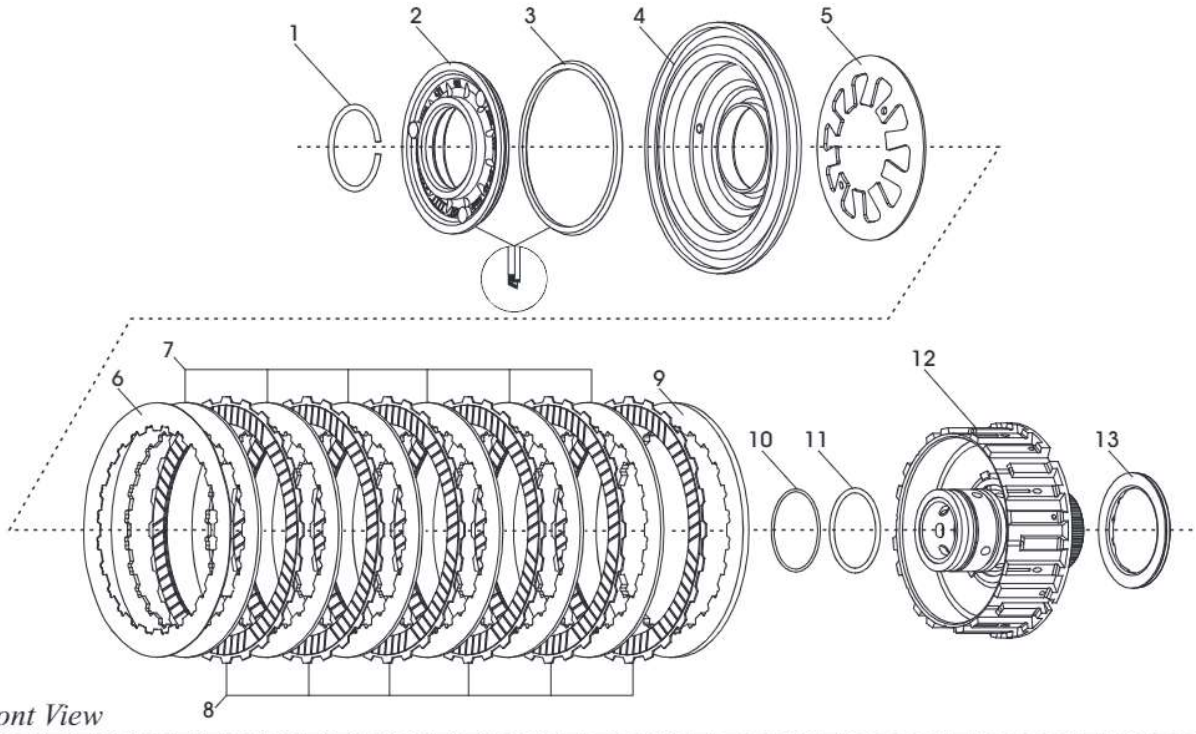

Rear View

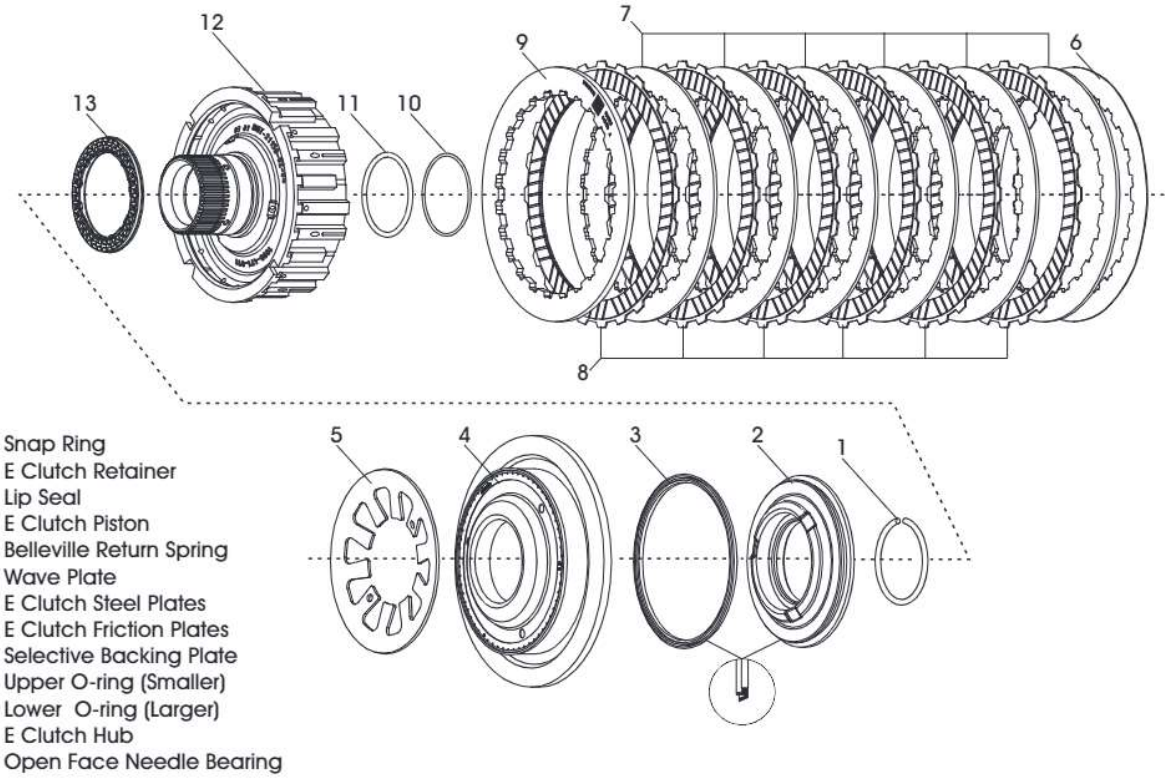

1 Snap Ring
2 E Clutch Retainer
3 Lip Seal
4 E Clutch Piston
5 Belleville Return Spring
6 Wave Plate
7 E Clutch Steel Plates
8 E Clutch Friction Plates
9 Selective Backing Plate
10 Upper O-ring (Smaller)
11 Lower O-ring (Larger)
12 E Clutch Hub
13 Open Face Needle Bearing

Copyright © 2017 ATSG

Figure 25

BRAKE AND CLUTCH REBUILD

Figure 26

Figure 27

"E" CLUTCH REBUILD

23. The next clutch assembly up from the C clutch is the E Clutch. Use figure 25 on page 77 as a guide to cleaning, inspecting and rebuilding the E clutch assembly.

24. Install new O-rings into the E clutch hub and lubricate with gel (figure 26)

25. Install the belleville spring into the hub as shown in figure 27.

26. Install the backing plate onto the hub (figure 28).

27. Alternately install pre-soaked friction and steel plates beginning with a friction plate and ending with a steel and wave plate (figure 29).

Figure 28

Figure 29

BRAKE AND CLUTCH REBUILD

28. Inspect the molded rubber on the E clutch piston for tears, separation, shrinking or hardness and replace if necessary.

29. Lubricate the molded seal and the inside center of the piston with gel for the O-ring on the hub. Install the good or new E clutch molded piston into the hub (figure 30).

30. Install a new lip seal into the E clutch retainer (figure 31) and lubricate the seal with gel as well as the inside center of the retainer for the O-ring on the hub.

31. Install the retainer into the E clutch piston (figure 32). Using a suitable press, carefully compress the assembly and install the retaining snap ring (figure 33).

32. Clutch clearance specifications for the E clutch using new pre-soaked frictions are 1.62mm (0.064") to 2.01mm (0.079").

33. For additional specifications and for adjustment procedures refer to pages 86 through 89.

Figure 31

Figure 32

Figure 30

Figure 33

BRAKE AND CLUTCH REBUILD

STATOR SUPPORT AND PUMP ASSEMBLY

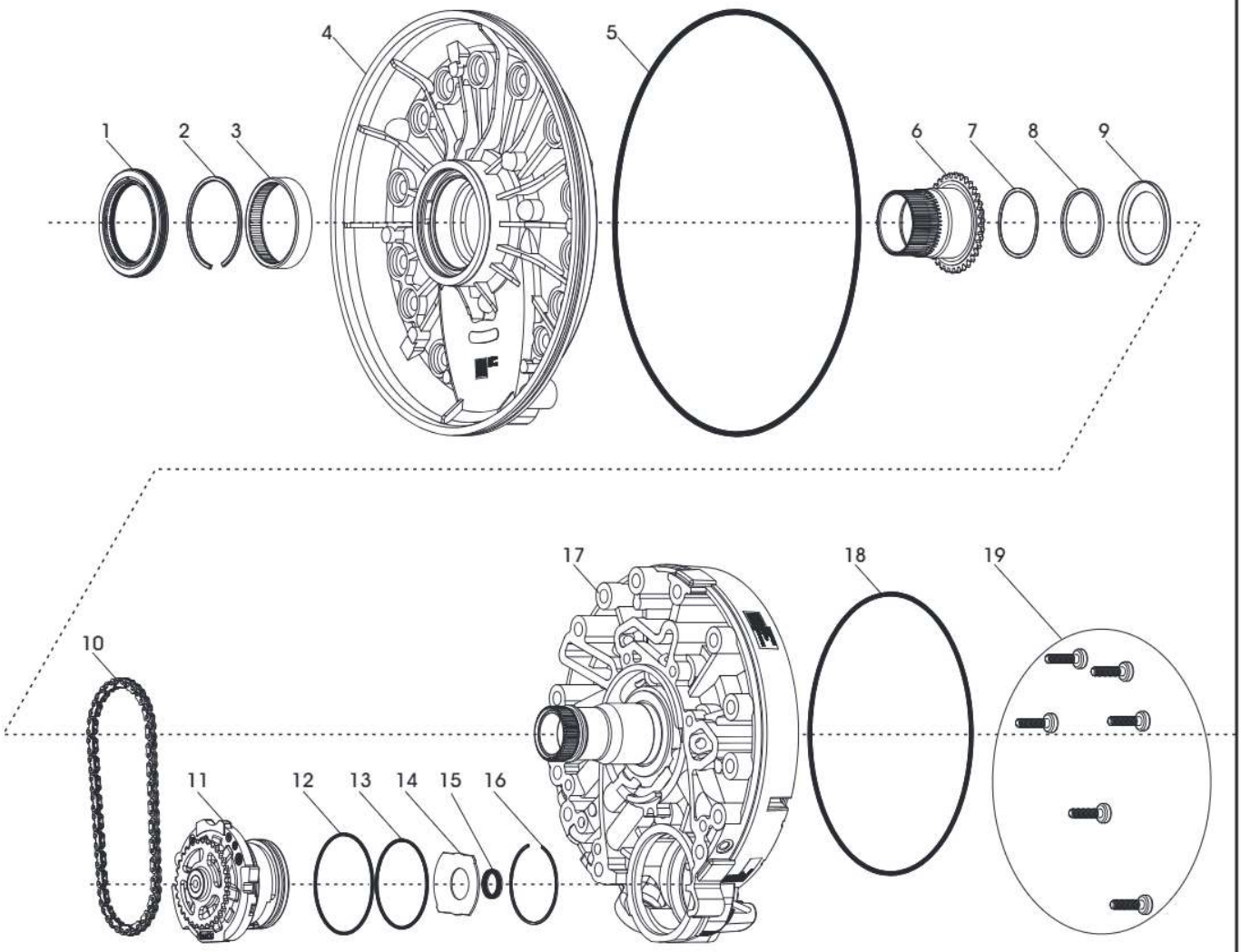

1 Front Seal
2 Snap Ring
3 Caged Needle Bearing
4 Pump Cover
5 Cover to Case O-ring
6 Pump Drive Sprocket
7 Wave Shim
8 Spacer
9 Tin Cap (Cover)
10 Pump Chain
11 Double Stroke Vane Pump Assembly
12 Inner O-ring
13 Outer O-ring
14 Cover Plate
15 Pump to Housing Seal
16 Snap Ring
17 Stator Support, A Brake & Pump Housing
18 B Brake Housing O-ring
19 (6) # 40 Torx .962"x.230"
Tighten new: 5Nm (44"lbs) plus 45°

Copyright © 2017 ATSG

Figure 34

BRAKE AND CLUTCH REBUILD

A BRAKE ASSEMBLY AND B BRAKE PISTON

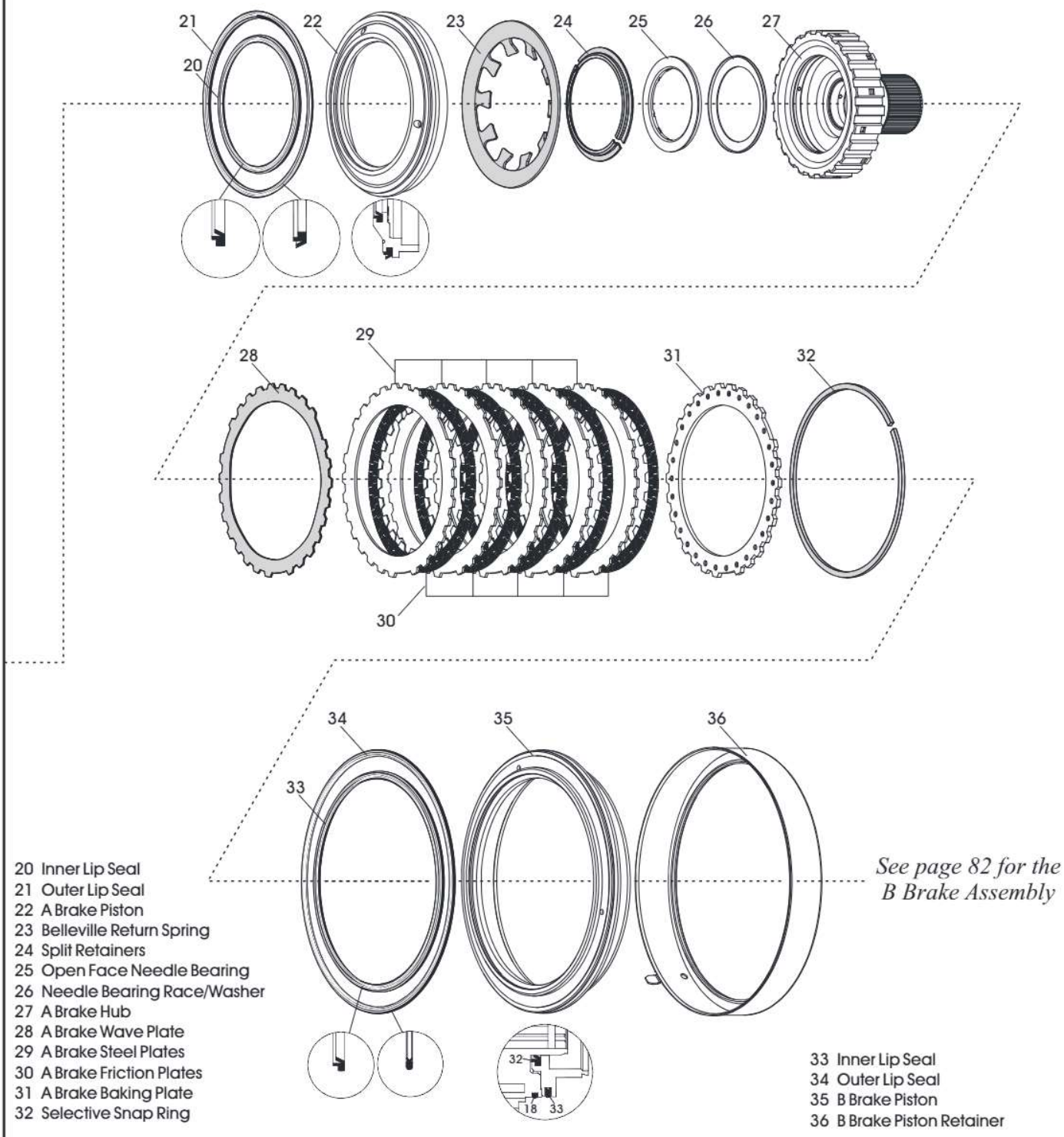

20 Inner Lip Seal
21 Outer Lip Seal
22 A Brake Piston
23 Belleville Return Spring
24 Split Retainers
25 Open Face Needle Bearing
26 Needle Bearing Race/Washer
27 A Brake Hub
28 A Brake Wave Plate
29 A Brake Steel Plates
30 A Brake Friction Plates
31 A Brake Baking Plate
32 Selective Snap Ring

See page 82 for the B Brake Assembly

33 Inner Lip Seal
34 Outer Lip Seal
35 B Brake Piston
36 B Brake Piston Retainer

Copyright © 2017 ATSG

Figure 35

BRAKE AND CLUTCH REBUILD

B BRAKE ASSEMBLY

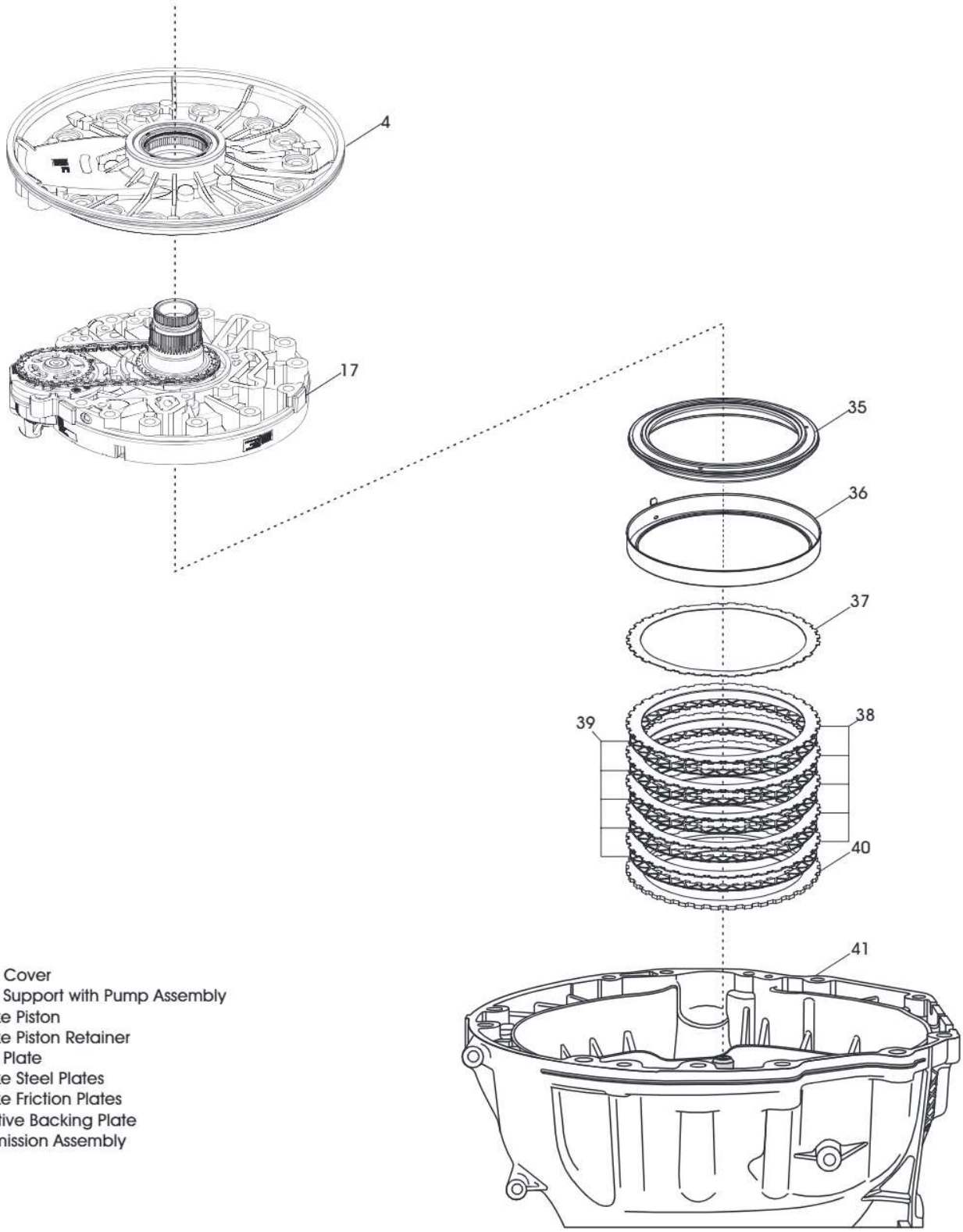

4 Pump Cover
17 Stator Support with Pump Assembly
35 B Brake Piston
36 B Brake Piston Retainer
37 Wave Plate
38 B Brake Steel Plates
39 B Brake Friction Plates
40 Selective Backing Plate
41 Transmission Assembly

Copyright © 2017 ATSG

Figure 36

BRAKE AND CLUTCH REBUILD

"A" BRAKE REBUILD

34. The entire A brake assembly and the B brake piston assembly are a part of the pump assembly as seen in figures 34, 35 and 36. Use these figures as a guide to cleaning, inspecting and rebuilding the A and B brake assembly. Replace bushings, rings and seals as necessary.

35. Install new lip seals into the A brake piston and lubricate with gel (figure 37).

36. Carefully install the A brake piston into the previously assembled oil pump assembly* (figure 38).

** - Oil pump assembly rebuild procedures are shown beginning on page 90.*

37. Place the A brake's belleville spring onto the piston as shown in figure 39.

38. Bring the assembly to a suitable press to compress the belleville spring and install the two halves of the split retainer ring (figure 40).

Figure 38

Figure 39

Figure 37

Figure 40

BRAKE AND CLUTCH REBUILD

Figure 41

39. Install the A brake wave plate followed by a steel plate (figure 41).

40. Place a light coat of gel onto the backside of the A brake hub's open face needle bearing and fit it onto the pump housing as seen in figure 42. Then install both the bearing race and A brake hub into the pump housing (figure 43). Alternately install pre-soaked friction and steel plates ending with a friction plate (figure 44). Then install both the backing plate and retaining snap ring as seen in figure 45.

41. Clutch clearance specifications for the A brake using new pre-soaked frictions are 1.41mm (0.056") to 1.7mm (0.067"). Refer to pages 86 through 89 for additional specifications and procedures.

Figure 42

Figure 44

Figure 43

Figure 45

BRAKE AND CLUTCH REBUILD

"B" BRAKE REBUILD

42. Install new lip seals into the B brake piston and lubricate with gel (figure 46).

43. Inspect the molded rubber on the B brake retainer for tears, separation, shrinking or hardness and replace if necessary.

44. Insert the piston into the B brake retainer (figure 47).

45. Install a new O-ring on the pump housing and lubricate the O-ring with gel as well as the inside of the retainer (figure 48).

46. Align the tab on the retainer to the notch in the housing and press the piston and retainer into place as seen in figure 49.

47. The B brake assembly is installed into the case beginning with the backing plate followed by pre-soaked frictions and steels and ending with a wave plate as seen in figure 36. This will be covered later in the reassembly process of the transmission.

48. Clutch clearance specifications for the B brake using new pre-soaked frictions are 1.52mm (0.060") to 1.93mm (0.076").

49. For additional specifications and for adjustment procedures refer to pages 86 through 89.

Figure 47

Figure 48

Figure 46

Figure 49

CLUTCH AND BRAKE SPECIFICATIONS AND ADJUSTMENT PROCEDURES

CLUTCH	CONDITION	MINIMUM	NORMAL	MAXIMUM
A	NEW	1.41 mm	1.655 mm	1.7 mm
		0.056 in	0.061 in	0.067 in
	AFTER OPERATION	1.41 mm	1.655 mm	1.9 mm
		0.056 in	0.061 in	0.075 in
B	NEW	1.52 mm	1.725 mm	1.93 mm
		0.060 in	0.068 in	0.076 in
	AFTER OPERATION	1.52 mm	1.825 mm	2.13 mm
		0.060 in	0.072 in	0.084 in
C	NEW	1.62 mm	1.815 mm	2.01 mm
		0.064 in	0.071 in	0.079 in
	AFTER OPERATION	1.62 mm	1.935 mm	2.25 mm
		0.064 in	0.076 in	0.089 in
D	NEW	1.37 mm	1.515 mm	1.66 mm
		0.054 in	0.060 in	0.065 in
	AFTER OPERATION	1.37 mm	1.615 mm	1.86 mm
		0.054 in	0.064 in	0.073 in
E	NEW	1.62 mm	1.815 mm	2.01 mm
		0.064 in	0.071 in	0.079 in
	AFTER OPERATION	1.62 mm	1.935 mm	2.25 mm
		0.064 in	0.076 in	0.089 in

Figure 50

SELECTABLE SNAP RING AND BACKING PLATES

The A Brake clearance specification is achieved by selecting one of 6 different adjustable snap rings

The B Brake clearance specification is achieved by selecting one of 7 different adjustable backing plates.

The C & E Clutch clearance specification is achieved by selecting one of 7 different adjustable backing plates.

The D Clutch clearance specification is achieved by selecting one of 8 different adjustable snap rings

A Brake	B Brake	C & E Clutch	D Clutch
3.2 mm - 0.125 in.	6.0 mm - 0.236 in.	4.8 mm - 0.188 in.	3.0 mm - 0.118 in.
3.0 mm - 0.118 in.	5.8 mm - 0.228 in.	4.5 mm - 0.177 in.	2.8 mm - 0.110 in.
2.8 mm - 0.110 in.	5.6 mm - 0.220 in.	4.2 mm - 0.165 in.	2.6 mm - 0.102 in.
2.6 mm - 0.102 in.	5.4 mm - 0.212 in.	3.9 mm - 0.153 in.	2.4 mm - 0.0944 in.
2.4 mm - 0.0944 in.	5.2 mm - 0.204 in.	3.6 mm - 0.141 in.	2.2 mm - 0.0866 in.
2.2 mm - 0.0866 in.	5.0 mm - 0.196 in.	3.3 mm - 0.129 in.	2.0 mm - 0.0787 in.
	4.8 mm - 0.188 in.	3.0 mm - 0.118 in.	1.8 mm - 0.0708 in.
			1.6 mm - 0.0629 in.

Figure 51

CLUTCH AND BRAKE SPECIFICATIONS AND ADJUSTMENT PROCEDURES

49. Checking clutch and brake clearances are performed by compressing the entire stack-up (*The wave plate, all steel plates, pre-soaked frictions and apply or thrust plate*).

Dodge provides special tools and force specifications to perform these procedures. The three main tools they offer is the force gauge (figure 52), pressing tool adapters (figure 53) and a pressing tool (figure 54).

Figure 55 is an example of using these tools to compress the A brake assembly applying 200 N (45 lbs.) of force onto the brake assembly to make a clearance measurement.

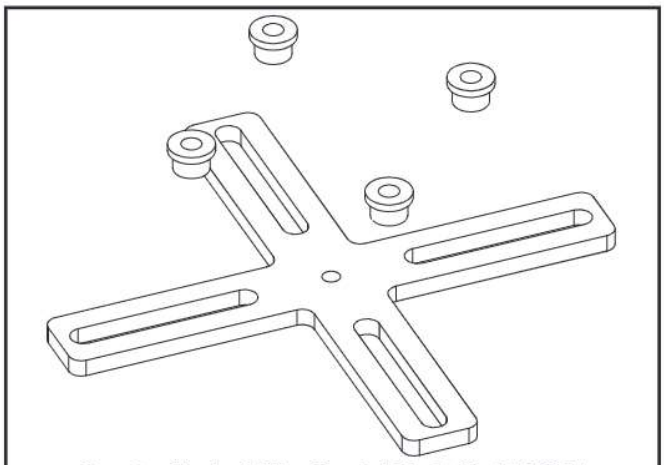

Pressing Tool: Miller Special Tools Tool #8901A

Figure 54

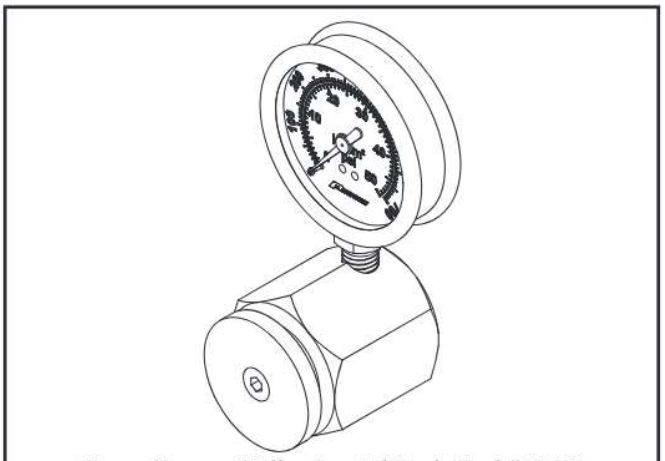

Force Gauge: Miller Special Tools Tool #10429

Figure 52

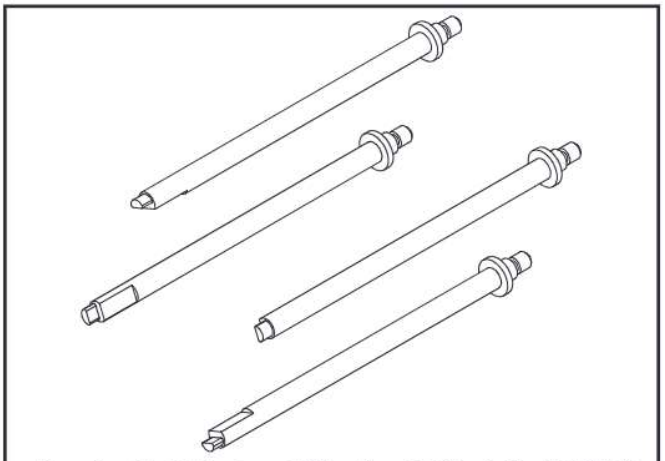

Pressing Tool Adapter: Miller Special Tools Tool #10428

Figure 53

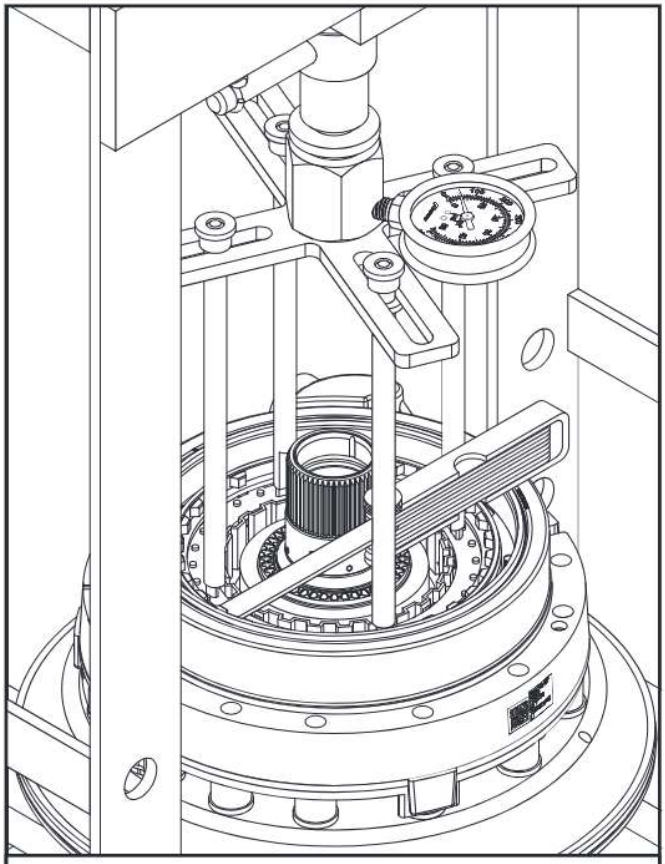

Using special tool 10428 (1) and (10429) (2) Place the A-clutch/oil pump assembly in a suitable arbor press. Apply 200 N (45 lbs.) of force to the A-clutch backing plate to compress the wave plate.

Figure 55

CLUTCH AND BRAKE SPECIFICATIONS AND ADJUSTMENT PROCEDURES

Figure 56

Figure 57

50. An alternative to purchasing special tools to check and adjust clearances, is to sufficiently compress the entire clutch assembly so as to flatten out the wave plate. Having pre-soaked frictions ensures a quality clearance check.

51. The A Brake (figure 56) and D Clutch (Figure 57) are checked in a similar fashion as both of these assemblies stack up in a drum type configuration. Using a suitable press, compress the stack-up completely then take a measurement. Rotate the assembly 90º and retake the measurement. Repeat this process for a total of four measurements. Add them together and divide by four to get the average. Use this number to adjust the clearance using the charts in figures 50 and 51. Making this check with Miller tools, the measurement is taken once as the four finger press adapter ensures a complete press. Both of these packs are compressed to 200 N (45 lbs.) if using a force gauge.

52. Due to the configuration of the C and E Clutch, they too are checked in a similar way as shown in figures 58 and 59. Using a suitable press, compress the stack-up completely then take a measurement. Rotate the assembly 90º and retake the measurement. Repeat the process for a total of four measurements. Add them together and divide by four to get the average. Use this number to adjust the clearance using the charts in figures 50 and 51. Both of these packs are compressed to 200 N (45 lbs.) if using a force gauge.

Figure 58

Figure 59

CLUTCH AND BRAKE SPECIFICATIONS AND ADJUSTMENT PROCEDURES

53. With the B Brake being housed in the case, there is a three step process to determine the clearance. Begin by compressing the B brake on a suitable press (figure 60). Compress to 500 N (112 lbs.) if using a force gauge.

54. Using a suitable depth micrometer or dial caliper, measure the thickness of the fully compressed assembly as also seen in figure 60. **Record this as measurement A.**

55. Then measure from the mounting surface of the transmission oil pump to the base of the B-brake retainer inside the case (figure 61). **Record this as measurement B.**

56. Measure between the fluid pump sealing surface and the bottom of the straight edge. **Record this as measurement C.**

The calculation:

Take the case depth **(B)** subtract **(C)** subtract **(A).**

The remainder is the clearance of the B brake.

B - C - A = Clearance for B Brake

Use this number to adjust the clearance using the charts in figures 50 and 51.

Figure 60

Figure 61

Figure 62

PUMP ASSEMBLY REBUILD

Figure 1

"PUMPASSEMBLY" REBUILD

1. Two very small and thin c type retaining clips need to be removed to completely disassemble the double stroke vane pump for inspection and to change the drive sprocket shaft seal. Some rebuild kits will include new clips (figure 1) along with the pump seal and O-rings. If you do not have new clips, the old ones will need to be resized to ensure a tight fit (figure 2).

2. Remove the first retaining clip as seen in figure 3.

3. With the retaining clip removed, the pump pressure plate can be lifted off and the pump vanes can be removed using a pencil type magnet (figure 4).

Figure 2

Figure 4

Figure 3

Figure 5

PUMP ASSEMBLY REBUILD

4. The rotor is retained to the shaft with the second retaining clip. Once this is removed, the pump can be completely disassembled for inspection. While apart, change the drive sprocket shaft seal as seen in figure 5.

5. Insert the drive sprocket shaft into the pump cover, then install the rotor and new retaining clip, two locating pins and cam. Be sure the dimple in the cam next to a locating pin faces upwards as seen in figure 6.

6. Install all the vanes into the rotor and then fit the pump pressure plate onto the locating pins and install the c clip retainer (figure 7).

7. Install a new seal and two new O-rings onto the pump and lubricate with gel (figure 8).

8. Finish by installing the cover plate and snap ring as seen in figure 9.

Figure 7

Figure 8

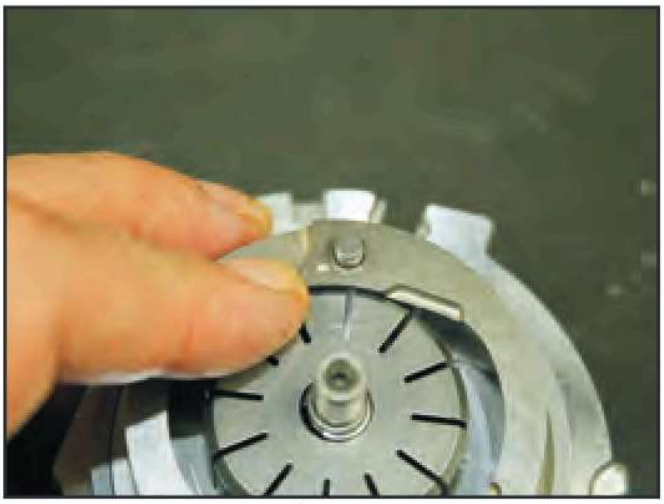

Figure 6

Figure 9

PUMP ASSEMBLY REBUILD

Figure 10

9. Remove the cap pressed onto the driven sprocket to remove the spacer washer for a thorough cleaning (figures 10 and 11). After cleaning install the spacer and carefully tap the cover onto the driven sprocket (figure 12).

10. Inspect the converter neck and needle bearing in the pump housing cover for damage (figure 13). If damaged, the converter and cover should be replaced. It is difficult to service the needle bearing in the pump cover if required as it is held in place with a captured retainer ring.

11. Carefully install the converter seal into the cover using a Miller Special Tool #10375 or your own suitable seal installer (figure 14).

Figure 11

Figure 13

Figure 12

Figure 14

PUMP ASSEMBLY REBUILD

12. Place a new O-ring into the cover (figure 15).

13. Place the pump, chain and driven sprocket onto the pump housing as one unit (figure 16). Be sure the pump sits all the way down into the pocket.

14. Place the cover onto the pump housing assembly. Hold the two halves together and use a # 40 Torx to finger tighten one of the aluminum .955"x.228" bolts as seen in figure 17. Install the remainder of the five remaining bolts and torque all to new bolt specification of 5 Nm (44 in. lbs) plus 45° (figure 18).

15. Turn the driven sprocket to verify the assembly is not bound up (figure 19).

Figure 17

Figure 15

Figure 18

Figure 16

Figure 19

TRANSMISSION REASSEMBLY

Figure 1

TRANSMISSION REASSEMBLY

1. With all bearings, washers and parts cleaned, install two new turbine shaft sealing rings as shown in figure 1and lubricate with gel.

2. Insert the P4 annulus into the P4 annulus drum and install the snap ring into the P4 annulus drum and set aside (figures 2 and 3).

3. Install a closed face needle bearing with the larger outer race facing down into the P4 sun gear/C/E clutch retainer. Be sure it fully seats and fits snugly (figure 4). Then install the C clutch assembly as seen in figure 5.

Figure 2

Figure 4

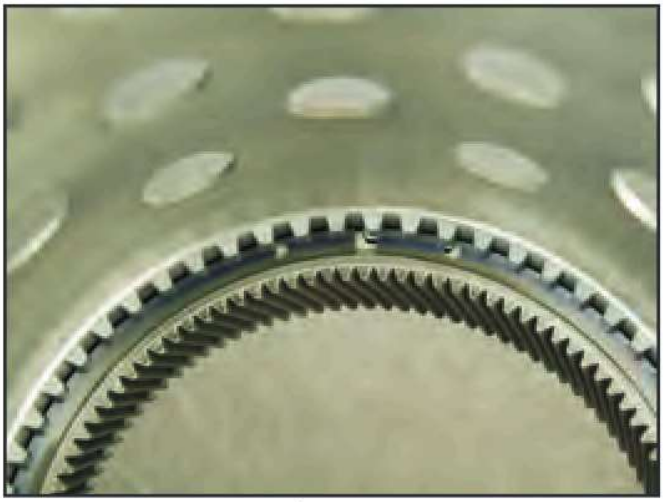

Figure 3

Figure 5

TRANSMISSION REASSEMBLY

4. Install another closed face needle bearing with the larger outer race facing down into the C clutch assembly (figure 6) Be sure it fully seats and fits snugly. Then install the E clutch assembly as seen in figure 7.

5. Install the snap ring into the lower groove of the P4 sun gear/C/E clutch retainer (figure 8).

6. Install the P3 annulus into the P4 sun gear/C/E clutch retainer (figure 9).

7. Install another snap ring (same dimensions) into the upper groove of the P4 sun gear/C/E clutch retainer (figure 10).

Figure 8

Figure 6

Figure 9

Figure 7

Figure 10

TRANSMISSION REASSEMBLY

Figure 11

8. Install the P4 sun gear/C/E clutch retainer into the D clutch hub\drive shell (figure 11).

9. Install the needle bearing onto the planetary carrier as seen in figure 12.

10. Install the P3 planetary carrier in the D clutch hub\drive shell (figure 13).

11. Install the snap ring (figure 14) and set the assembly aside.

12. Install the P4 planetary carrier\output shaft\D clutch drum assembly into the P4 annulus drum (figure 15).

Figure 12

Figure 14

Figure 13

Figure 15

TRANSMISSION REASSEMBLY

13. Install the D clutch hub\drive shell assembly into the into the P4 annulus drum assembly with a twisting motion to index the D clutch hub into the D clutch frictions (figure 16).

14. Install the P2 annulus\P3 sun gear into the drum assembly (figure 17), followed by the open face needle bearing and washer as seen in figure 18.

15. Install the input shaft with P2 planetary carrier into the drum assembly (figure 19), followed by the P1/P2 sun gear (figure 20).

Figure 18

Figure 16

Figure 19

Figure 17

Figure 20

TRANSMISSION REASSEMBLY

Figure 21

16. Install the P1 planetary carrier (figure 21).

17. Install the snap ring (figure 22).

18. Install five new turbine shaft sealing rings and one O-ring along with the needle bearing and holding plate onto the P1 planetary carrier. as seen in figure 23.

19. Install the P1 annulus\B clutch hub assembly onto the P4 annulus drum (figure 24).

20. Install the selectable shim to the P1 annulus/B clutch hub (figure 25).

Figure 22

Figure 24

Figure 23

Figure 25

ZF8HP45 TRANSMISSION REASSEMBLY

21. If working properly, it is not necessary to remove the internal park mechanism as only the park pawl shaft plug has a seal to be replaced.

22. The manual seal can be easily removed using a suitable extractor or pick (figure 26).

23. Inspect and remove any burrs on the manual shaft before installing a new seal. Lubricate with gel and carefully install a new seal with a slight twisting motion (figure 27).

24. Seat the seal using a suitable seal installer (figure 28).

25. If the internal park mechanism needs to be removed, begin by securing the park rod in the "out of park" position. The parking rod's barrel spring is loaded pushing the rod into the park position.

Install a generic lever or the manual park release lever onto the transmission. Rotate the lever until the park rod is out of the park position. Fix it in place using a wire tie as seen in figure 29.

This will be the same procedure used when installing the input/output shaft and P4 annulus drum assembly into the case (figure 39), and installing the Mechatronic unit.

Figure 27

Figure 28

Figure 26

Figure 29

ZF8HP45 TRANSMISSION REASSEMBLY

Figure 30

26. Remove 3 park pawl lock rod guide #27 torx bolts and plate (figure 30).

27. Using an 8mm allen socket, remove the park pawl plug, shaft, park pawl and spring from the case (figure 31).

28. Relieve the tension on the park rod by removing the wire tie from the lever. Drive the roll pin through the fork and selector shaft (figure 32). Remove the selector shaft, fork, park rod and spring from the case. Inspect all parts and replace as necessary. Install a new seal onto the park pawl shaft plug (figure 33).

29. Using figure 34 as a guide, install the park rod assembly and secure in place with the roll pin.

Figure 31

Figure 33

Figure 32

Figure 34

ZF8HP45 TRANSMISSION REASSEMBLY

30. Using figure 35 as a guide, install the park pawl assembly into the case. Using an 8mm allen socket, tighten the park pawl shaft plug to 35 Nm (26 ft. lb.).

31. Secure the park rod into the "out of park" position. Install the park pawl lock rod guide plate and bolts figure 36). Tighten bolts to 10 Nm (89 in. lb.).

32. Check for proper operation (figure 37).

33. Secure the case to a holding fixture (figure 38). Fix the park rod in the "out of park" position as seen in figure 29.

34. Carefully install the input/output shaft and P4 annulus drum assembly into the case (figure 39).

Figure 37

Figure 35

Figure 38

Figure 36

Figure 39

ZF8HP45 TRANSMISSION REASSEMBLY

Figure 40

35. Install the B brake backing plate into the case (figure 40).

36. Beginning with a friction plate (figure 41), alternately install friction and steel plates ending with a steel plate (figure 42). Then install the wave plate (figure 43).

37. Refer to page 89 for B brake clearance procedures.

38. Ensure that the needle bearing is securely snapped onto the A brake hub before installing the pump and cover assembly (figure 44).

39. Carefully install the pump and cover assembly.

Figure 41

Figure 43

Figure 42

Figure 44

ZF8HP45 TRANSMISSION REASSEMBLY

40. Firmly press the oil pump in place before drawing it in with bolts.

41. Carefully snug the original pump bolts so as to perform an end play check. Since end play checks are made from the rear (figure 45) and not from the front (figure 46), this procedure will take place after the output shaft washer, flange and nut is installed as explained on page 108. Once installed, end play specification is between 0.11 - 0.42 mm (0.0043 - 0.0165 in.).

42. Front end play is adjusted by the selectable shim to the P1 annulus/B clutch hub shown in figure 25.

43. Once adjusted, install new aluminum bolts and washers (figure 47).

44. Tighten the oil pump cover as follows:

a. In order to seat the oil pump cover properly, pre tighten bolts one, seven and nine (figure 48) to 6 Nm (53 in. lb.).
b. Working in a clockwise pattern, beginning with number one, tighten to 10 Nm (89 in. lb.).
c. Working in a clockwise pattern, beginning with number one, tighten an additional 90°.

* *Specifications are given for new oil pump cover retaining bolts which are available through a service kit for the pump OE part number 68144277AA*

Figure 46

Figure 47

Figure 45

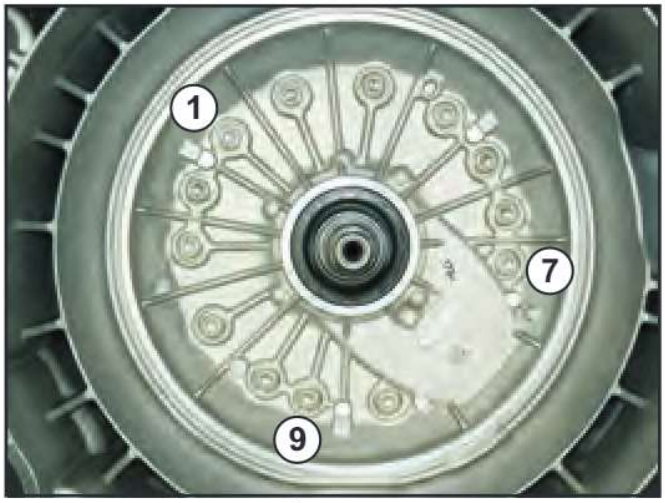

Figure 48

ZF8HP45 TRANSMISSION REASSEMBLY

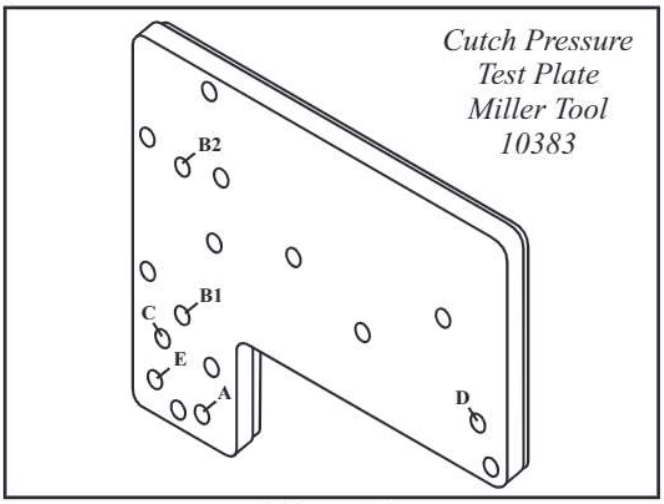

Figure 49

Figure 50

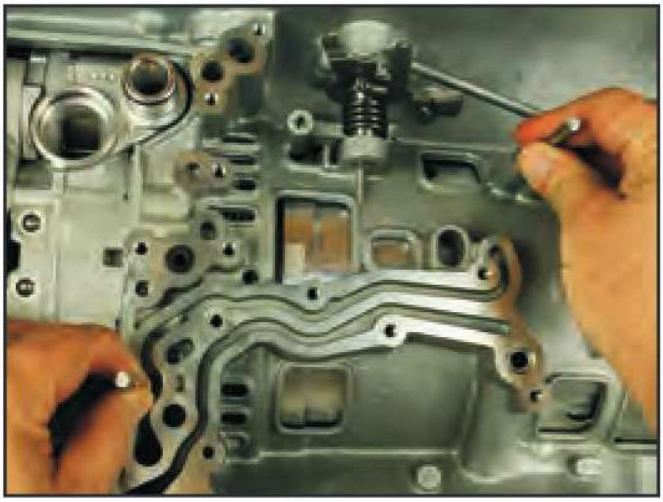

Figure 51

45. With the transmission on the bench, brake and clutch circuits can be checked using shop air (see figure 53). A test plate is available through Miller Tools that can assist in this test (figure 49).

46. Install the fluid port and a new compression seal into the transmission case (figure 50) along with two valve body guides (figure 51).

47. Index the mechanical park hold solenoid to the park rod fork and remove the tie wrap while installing the Mechatronic unit. Place the output speed sensor into position. Remove the guides and install 14 (#40 torx) valve body bolts (2.318" x 0.208"), an output shaft sensor retaining bolt and solenoid bracket bolt (0.760" x 0.232") finger tight as indicated in figure 52.

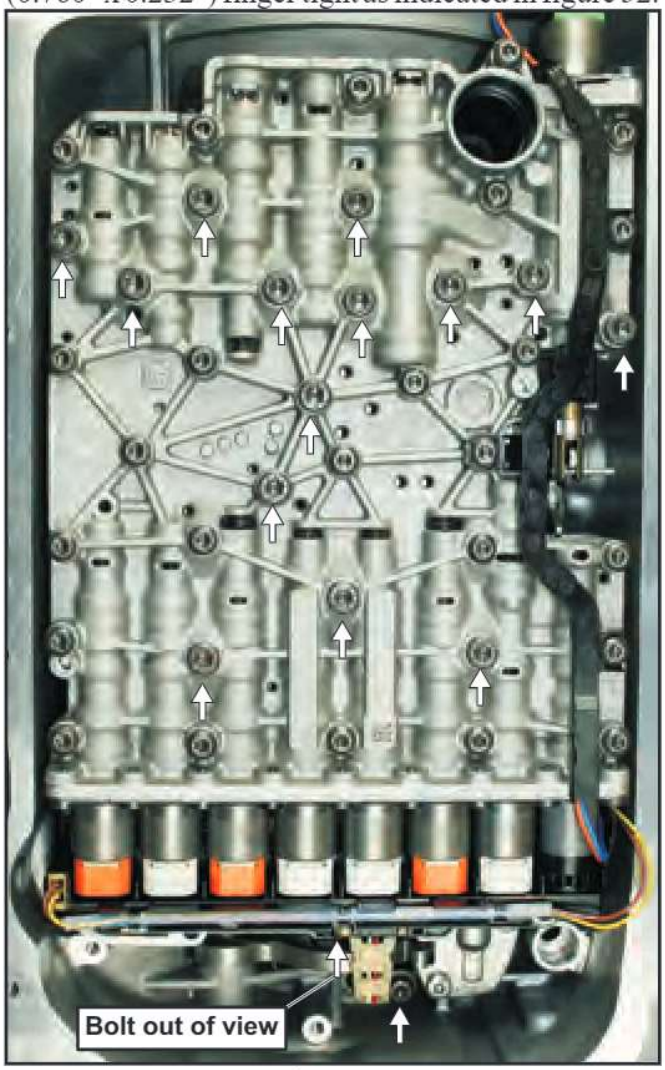

Figure 52

ZF8HP45 TRANSMISSION REASSEMBLY

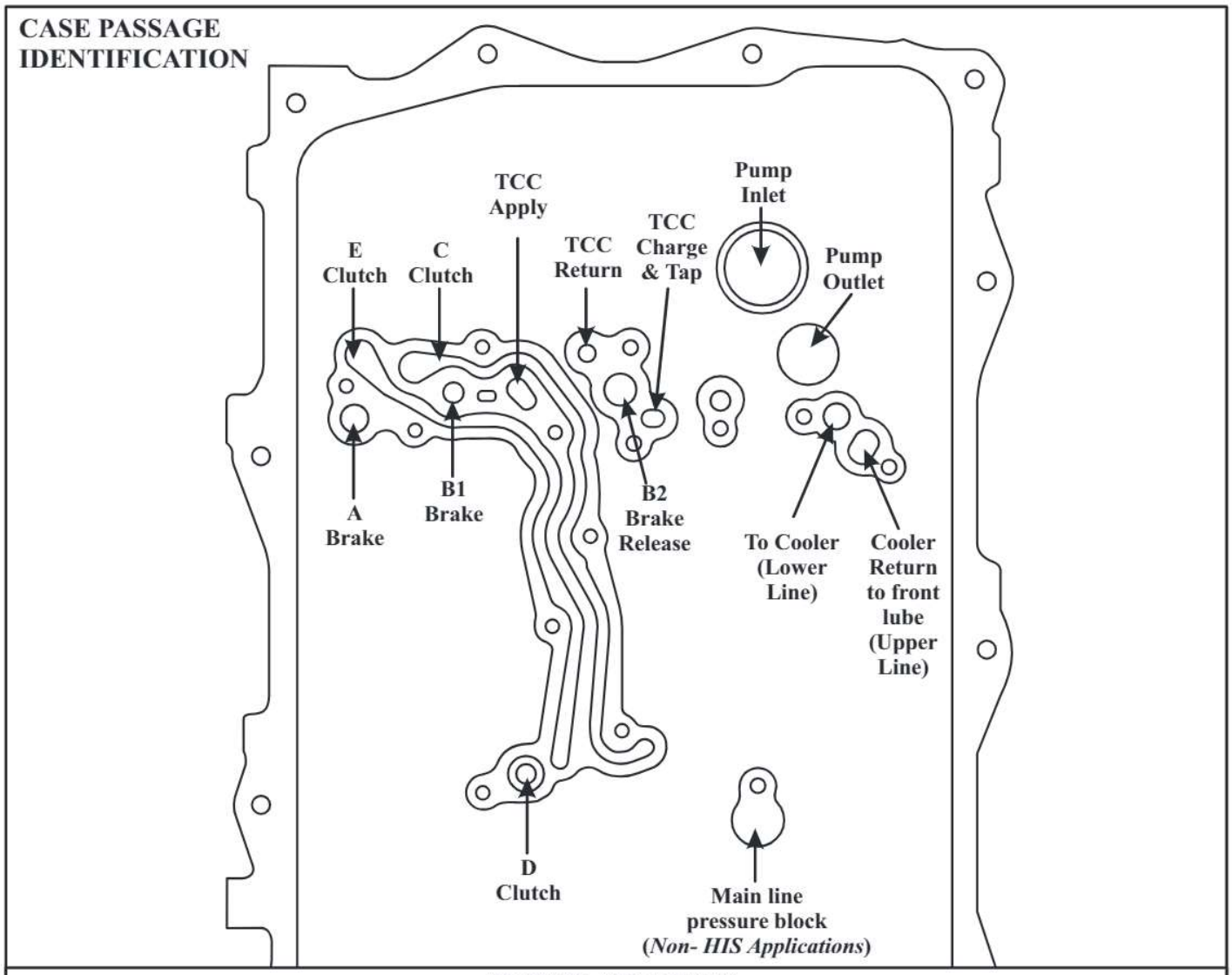

TEST PLATE NOTES:

A BRAKE - Apply air pressure to the feed hole located on the test plate marked A , listen for an audible thud. The piston should return to its starting position when the air pressure is removed.

B BRAKE FUNCTION - Apply air pressure to the feed hole located on the test plate marked B1 , listen for an audible thud. The piston should not return to its starting position when the air pressure is removed. If air pressure is applied to the B2 circuit, the B1 should return. An audible hiss may be heard when testing this clutch as the seal is designed to allow fluid/air to pass.

C CLUTCH - Apply air pressure to the feed hole located on the test plate marked C , listen for an audible thud. The piston should return to its starting position when the air pressure is removed.

D CLUTCH - Apply air pressure to the feed hole located on the test plate marked D , listen for an audible thud. The piston should return to its starting position when the air pressure is removed.

E CLUTCH - Apply air pressure to the feed hole located on the test plate marked E , listen for an audible thud. The piston should return to its starting position when the air pressure is removed.

Copyright © 2017 ATSG

Figure 53

ZF8HP45 TRANSMISSION REASSEMBLY

Figure 54

48. Using special tool (10377) or equivalent, carefully install the electrical harness insulator into the transmission case (figure 54).

49. Latch the electrical connector insulator lock by pushing in (figure 55) and install its 0.760" x 0.232" attaching bolt finger tight. Using a # 40 torx, tighten the 3 bolts indicated in figure 56 to 8 Nm (71 in. lbs.).

50. Install a new O-ring onto the HIS and lubricate it with gel. Install the HIS and its three attaching bolts finger tight (figure 57).

51. Using a # 40 torx, torque the valve body bolts (figure 58) and HIS bolts to 8 Nm (71 in. lbs.) using the sequence provided in figure 59.

Figure 55

Figure 57

Figure 56

Figure 58

ZF8HP45 TRANSMISSION REASSEMBLY

52. Plug in the Latching Solenoid on the HIS if so equipped as shown in Figure 60.

53. Install a new filter pan and filter pan gasket. Before installing, lubricate the new filter neck O-ring in the pan. Lay the pan in place and carefully tap the pan down into place being cautious to not tear the filter neck O-ring.

54. Install 13 filter pan attaching bolts (1.117" x 0.321") finger tight.

55. Using a # 40 torx, tighten the attaching bolts in the sequence shown in figure 61 to 10 Nm (89 in. lbs.).

Figure 60

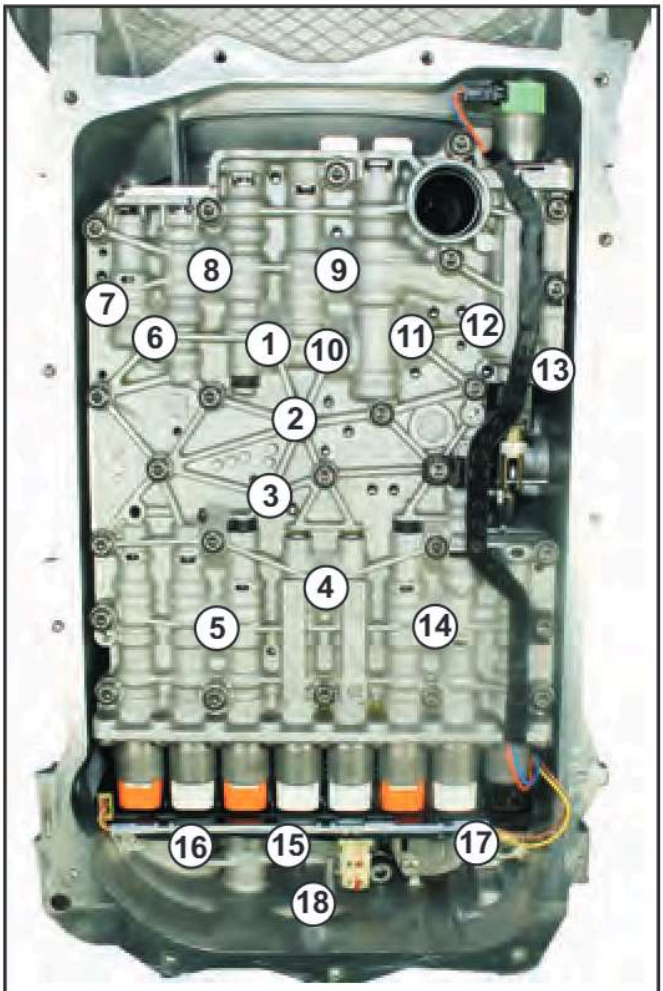

Torque sequence HIS Dependent

Figure 59

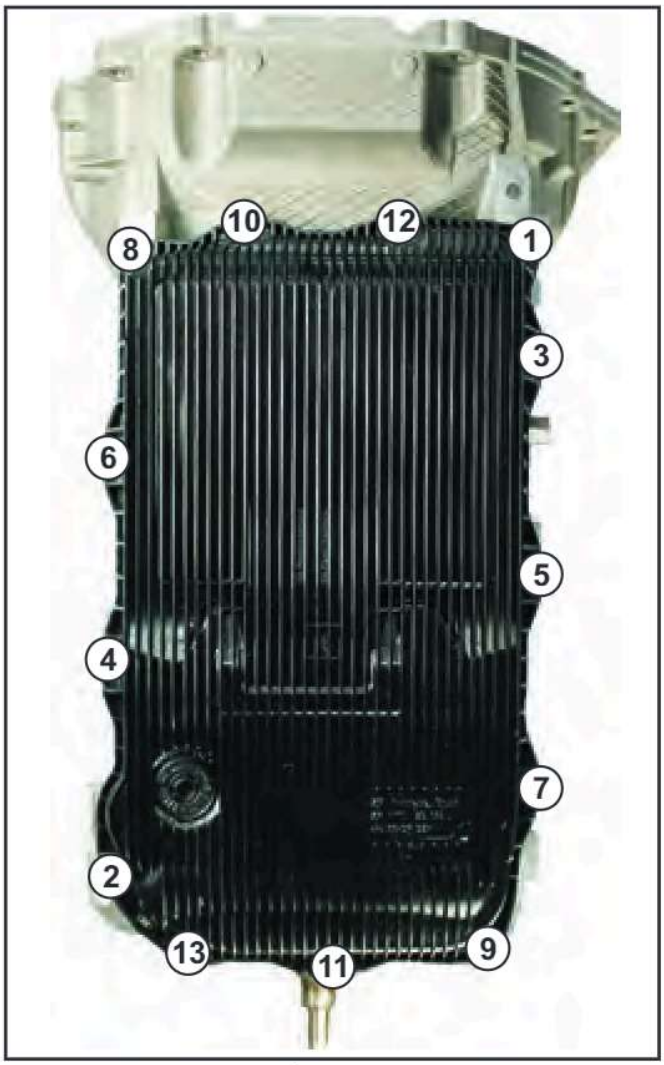

Figure 61

ZF8HP45 TRANSMISSION REASSEMBLY

Figure 62

56. Install the output shaft washer and rear seal using special tool 8481 or equivalent (figure 62).

57. When installed properly, the real seal will sit flush with the case (figure 63).

58. Install a new rear dust seal into the propeller shaft flange (figure 64).

59. Install the new propeller shaft flange nut (figure 65). Use a 34 mm 12 point socket to run the nut down. Then hold the flange with special tool C-3281 or equivalent and tighten nut to 60 Nm (44 Ft. lbs.). Once in place, stake the nut (figure 66).

Figure 63

Figure 65

Figure 64

Figure 66

ZF8HP45 TRANSMISSION FLUID SPECIFICATION

AUTOMATIC TRANSMISSION FLUID

The life-time oil type must not be confused or mixed with other automatic transmission fluids. Using other oil types could result in a gearbox failure.

Use Shell L 12108 automatic transmission fluid part # 68157995AA

ADDITIVES - Chrysler strongly recommends against the addition of any fluids to the 8HP45 transmission other than the automatic transmission fluid listed above. Special dyes MUST NOT BE USED in the 8HP45 transmission to find leak locations. The oil dye can cause shift quality issues and is not recommended. The 8HP45 fluid has illuminance that is visible under a black light.

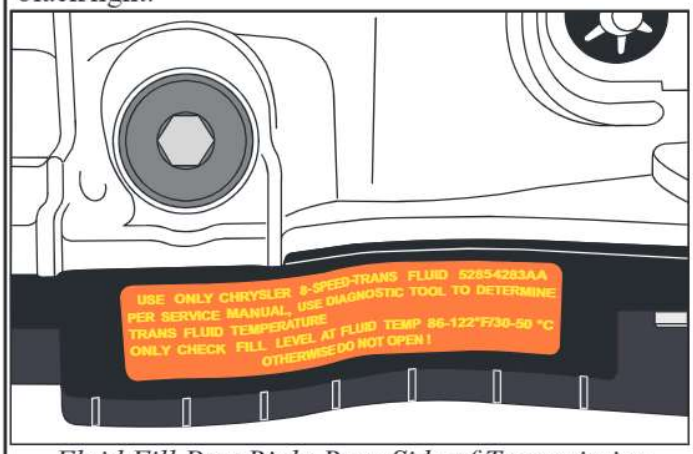

Fluid Fill Port Right Rear Side of Transmission

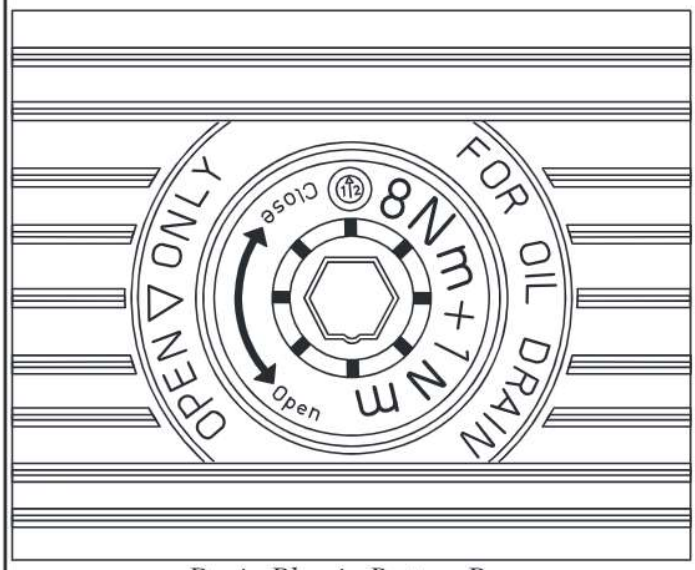

Drain Plug in Bottom Pan

CHECK OIL LEVEL PROCEDURE

1.Raise and support the vehicle on a level hoist.
2.Start the engine. The engine must continue to run for the entire test.
3.AWD vehicles only : Remove the front propeller shaft .
4.AWD vehicles only : Using a scan tool, enable Emissions Rolls Test Mode in the PCM.
5.Using a scan tool or the vehicle information center, verify that the transmission fluid temperature is below 30°C (86°F).
6.Disable traction control (ESC).
7.Remove the fill plug from the right rear of the transmission case.
8.Add transmission fluid until it trickles from the fill opening.
9.Install the fill plug.
10.Lower the vehicle for access to inside of the vehicle, leaving the tires at least 8 inches off the ground.
11.With the brakes applied, place the transmission in Reverse and hold for 5 seconds.
12.Place the transmission in Drive and hold for 5 seconds.
13.Release the brakes, slowly accelerate to 2nd gear and hold for 5 seconds.
14.Apply the brakes and place the transmission in Neutral.
15.Raise the engine speed to 2000 RPM for 5 seconds.
16.Return the engine to idle and place the transmission in Park.

NOTE:
A full transmission will have fluid at the fill hole with the transmission between 30°C (86°F) and 50°C (122°F). Do not over fill.

17.Remove the fill plug and allow excess fluid to drain from fill hole or add fluid as necessary.
18.Install the fill plug.
19.AWD vehicles only: Install the front propeller shaft .
20.AWD vehicles only: Using a scan tool, disable Emissions Rolls Test Mode in the PCM.
21.Using a scan tool, clear any DTCs.

Copyright © 2017 ATSG

ZF8HP55 TRANSMISSION REASSEMBLY

Figure 1

1. Using a #50 torx, secure the pump assembly to the main case with 14 (3.170" x .310") no-washer aluminum bolts (figure 1). Use the basic torque pattern and specifications given for the ZF8HP45 on page 103.

2. Most ZF8HP55 transmissions use the manual shift system requiring removal of the linkage shaft to change its seal. Remove the roll pin as seen in figure 2. Then remove the linkage shaft and change the seal (figure 3). Carefully install the linkage shaft through the seal (figure 4) and into the park rod linkage aligning the roll pin hole while depressing the detent spring. Once in place, insert the narrow end of the roll pin into the park rod linkage and shaft (figure 5). Once aligned, tap into position.

Figure 2

Figure 4

Figure 3

Figure 5

ZF8HP55 TRANSMISSION REASSEMBLY

CASE PASSAGE IDENTIFICATION

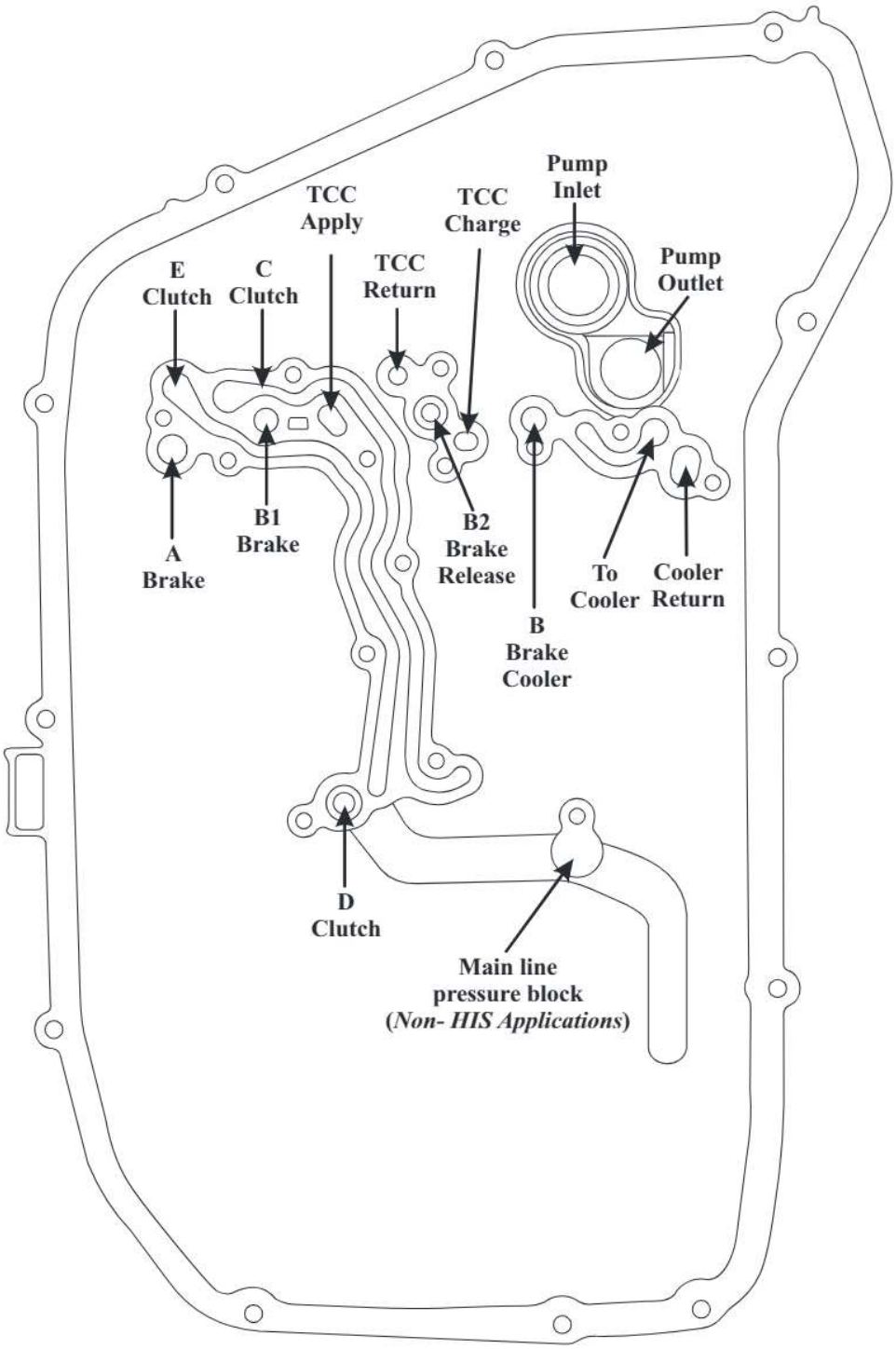

Copyright © 2017 ATSG

Figure 6

ZF8HP55 TRANSMISSION REASSEMBLY

Figure 7

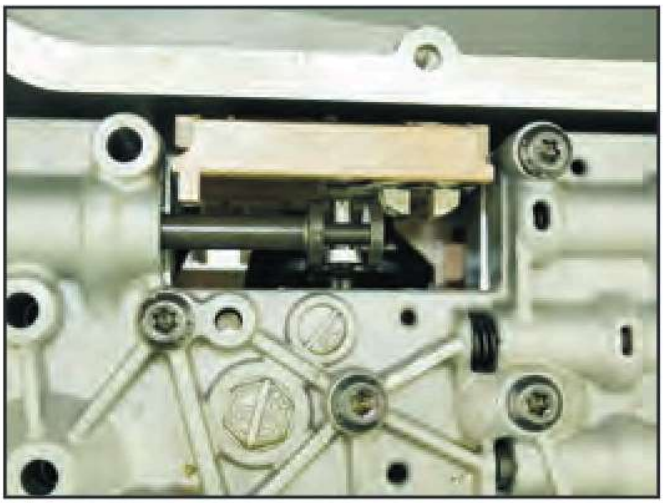

Figure 8

3. Using low compressed air pressure, brake and clutch circuits can be tested before installing the Mechatronic unit (figure 6 on previous page).

4. Lubricate the pump suction pipe in the valve body and the fluid port O-rings with gel. Install the fluid port it into the case along with a new compression seal (figure 7).

5. Install two valve body guides into the case like the ones shown on page 104 figure 51.

6. Carefully install the Mechatronic assembly into the case with the help of the guides. During the installation, index the manual valve (figure 8) and properly position the output speed sensor (figure 9).

7. Once the Mechatronic assembly is in place, carefully push the assembly flush to the case.

8. Remove the guides and install 14 (#40 torx) valve body bolts (2.318" x 0.208") finger tight, as well as 4 steel bolts (.965" x .230"); one which holds down the Output Shaft Speed Sensor and three which hold down part of the Mechatronic assembly.

9. Using a # 40 torx, tighten the attaching bolts (figure 10) in the sequence shown in figure 59 on page 107 to 10 Nm (89 in. lbs.).

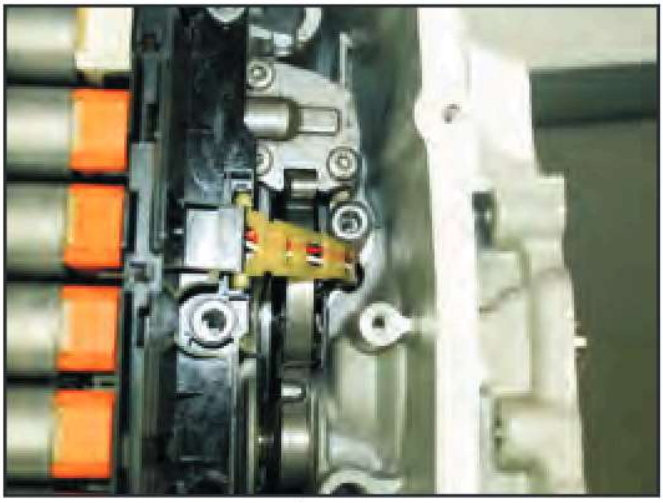

Figure 9

Figure 10

ZF8HP55 TRANSMISSION REASSEMBLY

10.Connect the internal wire harness to the Mechatronic unit and set its frame into place (figure 11). Using a # 27 torx, install 4 steel attaching bolts (1.574" x .190") and tighten (figure 12) to 10 Nm (89 in. lbs.).

11. Using a # 40 torx, install 1 steel bolt (.965" x .230") holding down the Mechatronic bulk head connector to the case (figure 13). Lubricate the new seals on the Mechatronic connector sleeve and install it into the case with the hold down tab towards the pan rail (figure 14). While pushing inward, rotate the sleeve clockwise fastening it to the internal harness (figure 15). The bolt hole in the hold down tab should be aligned with a threaded hole in the case.

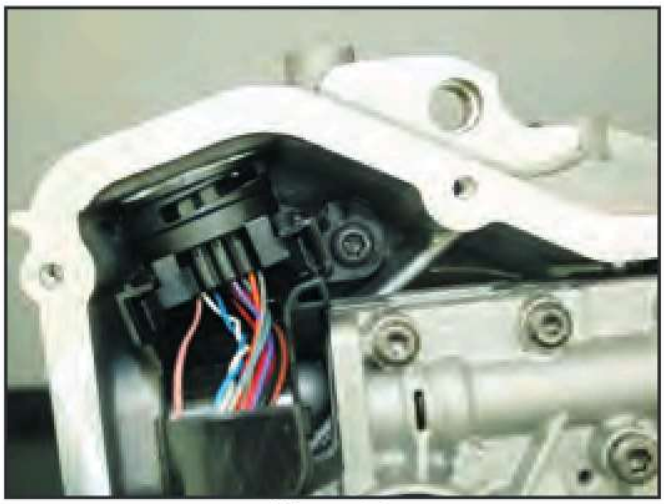

Figure 13

Figure 11

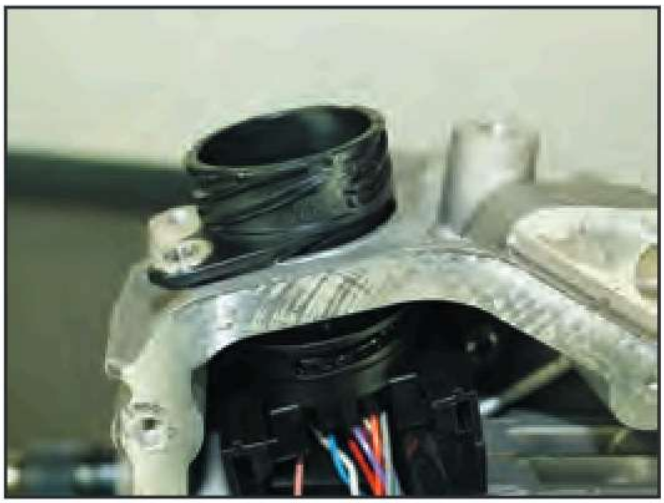

Figure 14

Figure 12

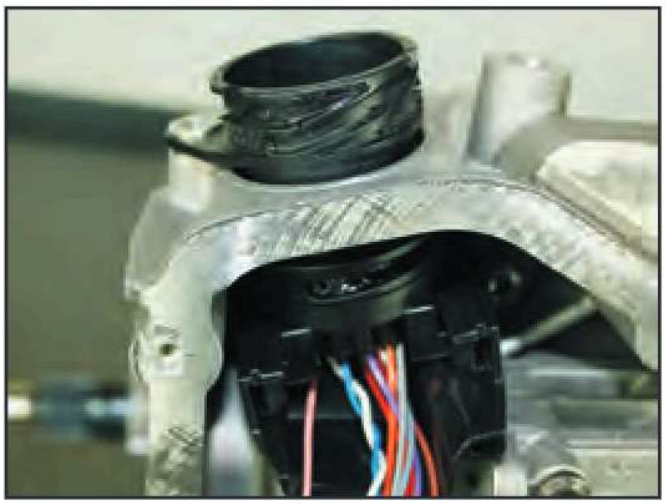

Figure 15

ZF8HP55 TRANSMISSION REASSEMBLY

Figure 16

12. Install a new filter and molded pan gasket if needed (figure 16). Then install the pan and 12 new aluminum bolts (.858 x .230") finger tight (figure 17). Using a # 40 torx, tighten the attaching bolts to 4 Nm (35 in. lbs.) according to the sequence shown. Then repeat the sequence giving each bolt 45° turn more.

13.Place the transmission onto its pan and install the front axle spur pinion and shaft flange (figure 18). And then install one upper and one lower steel attaching bolt (1.380" x .310") using a # 40 torx (figure 19).

14. Install the output shaft washer (figure 20).

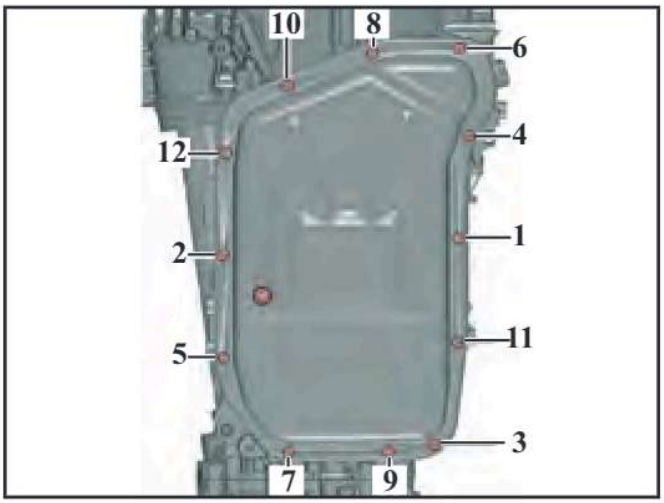

Figure 17

Figure 19

Figure 18

Figure 20

ZF8HP55 TRANSMISSION REASSEMBLY

15. The primary drive gear contains a bolt seal (figure 21) and a double sided seal (figure 22). Both of these need to be inspected and replaced if necessary.

16. Install the primary drive gear onto the output shaft while pressing the double sided seal into the case until it is flush with the casting (figure 23).

17. Install a 1.202" x .310" steel bolt and tighten using a # 50 torx (figure 24).

18. Install the double transfer gear assembly into the transmission as seen in figure 25.

Figure 23

Figure 21

Figure 24

Figure 22

Figure 25

ZF8HP55 TRANSMISSION REASSEMBLY

Figure 26

19. Install a new transfer gear case cover to case gasket (figure 26) and then the cover (figure 27). This may require a slight tapping using a dead blow hammer or plastic/hard rubber mallet.

20. Install 4 steel bolts (2.320" x .387") in the locations shown in figure 28. Then install 11 aluminum bolts (1.980" x 3.10") in the remaining locations and tighten using a # 40 torx.

21. Install the center differential (figure 29).

22. Install a new O-ring on the center differential housing and lubricate with gel (figure 30).

Figure 27

Figure 29

Figure 28

Figure 30

ZF8HP55 TRANSMISSION REASSEMBLY

23. Install 6 new aluminum bolts (1.977" x .308") into the center differential housing (figure 31). Tighten the bolts in three steps in the sequence shown figure 32 Using a # 40 torx. First tighten bolts 1 and 6 to 3 Nm (27 in. lbs.). Then tighten bolts 1 through 6 in the sequence given to 10 Nm (88 in. lbs.). Then tighten 1 through 6 an additional 90° more.

24. Install the front pinion tube with a new seal (figure 33).

25. Install new axle seal (figure 34) and converter seal into the converter housing.

26. Install a new front pinion gear shaft seal and lubricate with gel (figure 35).

Figure 33

Figure 31

Figure 34

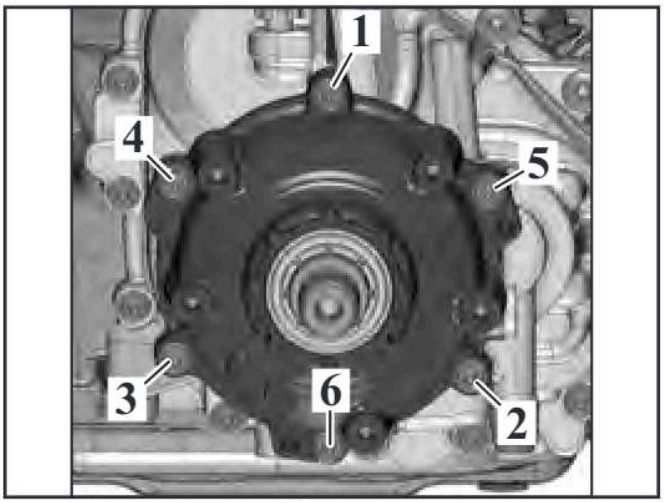

Figure 32

Figure 35

ZF8HP55 TRANSMISSION REASSEMBLY

Figure 36

27. Install a new converter and front differential housing to case gasket, a passage seal if required and a new turbine shaft O-ring (figure 36).

28. Install the converter and front differential housing (figure 37) and 14 new aluminum bolts (1.290" x .310") and tighten using a # 40 torx (figure 38).

29. Install the front differential spacer (figure 39) and bearing race (figure 40) into the converter and front differential housing.

Figure 37

Figure 39

Figure 38

Figure 40

ZF8HP55 TRANSMISSION REASSEMBLY

30. Install 1 new aluminum bolt (1.5" x .385") from the converter and front differential housing to case as seen in figure 41 and tighten using a # 40 torx.

31. Secure the connector sleeve to case with a .960" x .220" aluminum bolts as seen in figure 42.

32. Place a new O-ring on the front differential cover (figure 43) and install the front differential assembly into the case (figure 44). Install all 11 steel bolts (1.757" x .310") finger tight.

33. Tighten bolts 1 and 6 to 3 Nm (26.5 in. lbs.), then tighten bolts 1 to 11 in the sequence shown in figure 45 to 27 Nm (20 ft. lbs.).

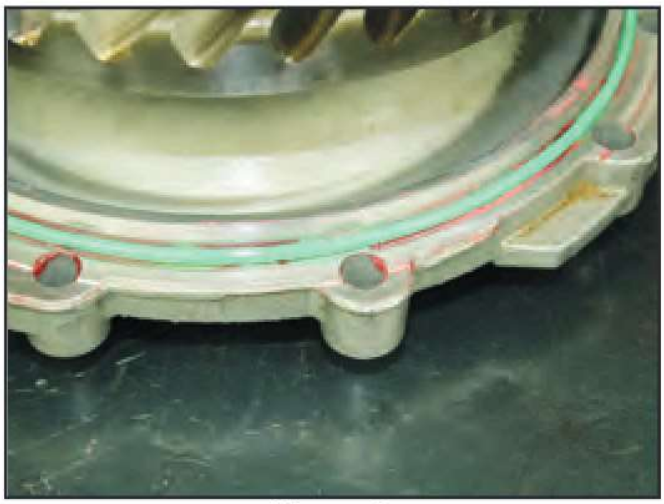

Figure 43

Figure 41

Figure 44

Figure 42

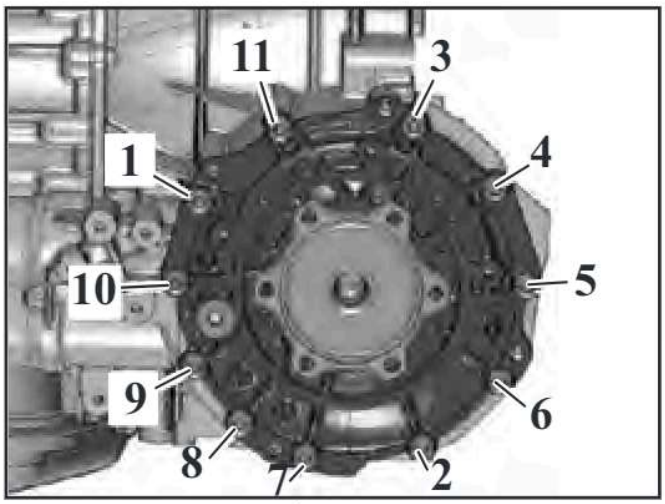

Figure 45

ZF8HP55 TRANSMISSION REASSEMBLY

Figure 46

Figure 47

Figure 48

34. Prime and install the torque converter (figure 46).

35. Install the left axle shaft into the transmission being careful to not tear the axle seal in the converter and differential housing with the splines at the end of the shaft (figure 47).

36. Install 3 (1.183" x .308") aluminum left axle flange to case retaining bolts to 9 Nm (79.6 in. lbs.). Then rotate an additional 60º more using a # 40 torx.

Special Note: At the time of printing, no overhaul/repair procedures are available for the center differential, final drive and transfer case sections. Failures in these areas require complete transmission assembly replacement.

ZF8HP55 TRANSMISSION FLUID SPECIFICATION

Figure 1 - Front Final Drive/Differential

A - Fill plug (8mm Allen / 27Nm - 20 ft. lbs.)
B - Drain plug (5mm Allen / 10Nm - 88 in. lbs.)

Gear oil temperature is checked at approximately 20 °C (68 °F) (room temperature). The oil level is correct when the front final drive is filled to the lower edge of the filler opening.

Fluid Type: G 052 145 S2

Capacity: 1.0 Liters (1.1 qt.)

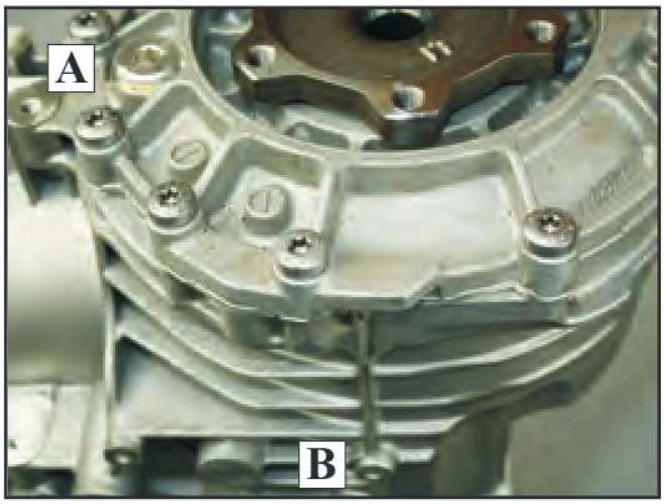

Figure 1

Figure 2 - Transmission

A - Fill plug (10mm Allen / 30Nm - 22 ft. lbs.)
B - Drain plug (5mm Allen / 12Nm - 106 in. lbs.)

The ATF level is correct if a small amount of fluid drips out of the inspection and fill opening (this is normal as the fluid expands as it heats up) at an ATF temperature between 35 °and 45 °C (95 °and 113 °F), for hot countries 50 °C (122 °F).

Fluid Type: G 060 162 A2

Capacity:
Initial fill 8.6 liters (9.1 qt.)
Refill 3.6 - 4.0 liters (3.8 qt. - 4.2 qt)

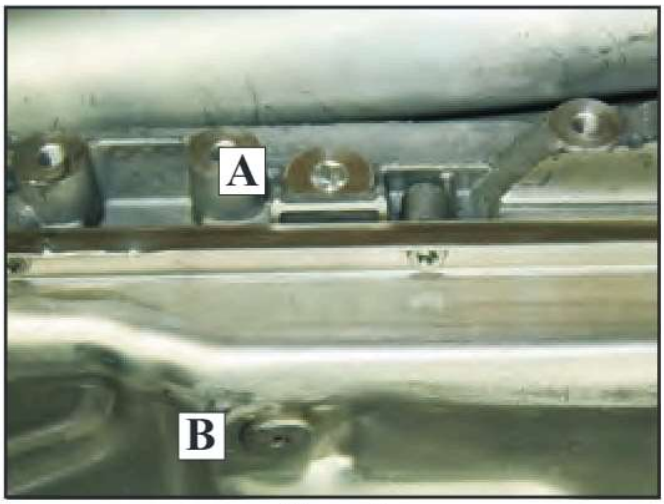

Figure 2

Figure 3 - Transfer Case Section

A - Fill plug (8mm Allen / 27Nm - 20 ft. lbs.)
B - Drain plug (6mm Allen / 12Nm - 106 in. lbs.)

Gear oil temperature is checked at approximately 20 °C (68 °F) (room temperature). The oil level is correct when the front final drive is filled to the lower edge of the filler opening.

Fluid Type: G 055 145 A2

Capacity: 2.0L (2.1 qt.)

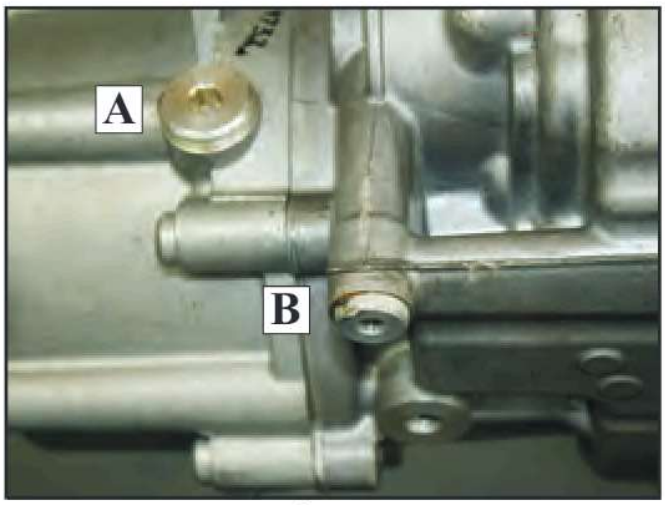

Figure 3

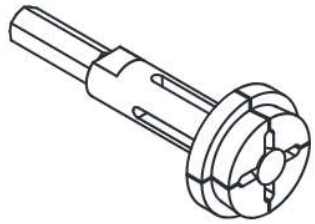	6787A - Remover, Bearing Cup
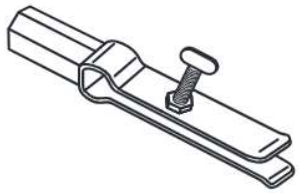	9585 - Remover, Bearing Cup
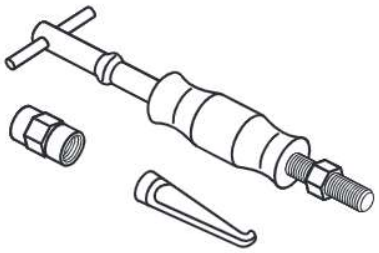	C-637 - Slide Hammer, Universal
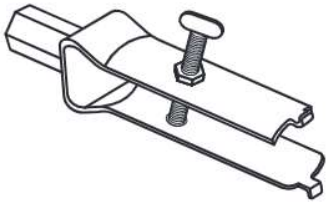	9664 - Remover, Bearing Cup
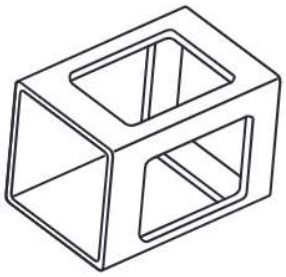	8925-3 - Assembly, Press Fixture
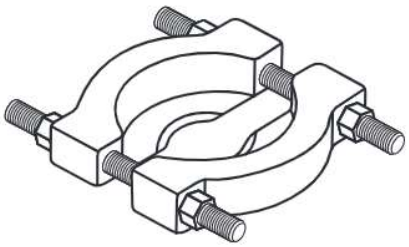	1130 - Splitter, Bearing/Gear

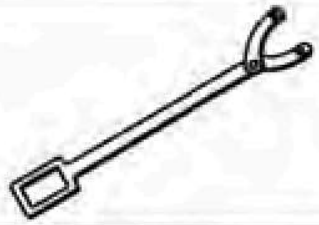	C-3281 - Holder, Flange
	10377 - Remover/Installer, Guide Sleeve.
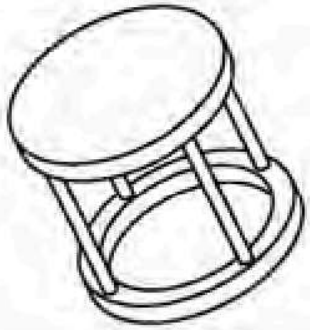	8285 - Compressor, Spring
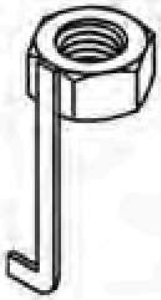	9667 - Remover, Seal - Slide Hammer, Universal
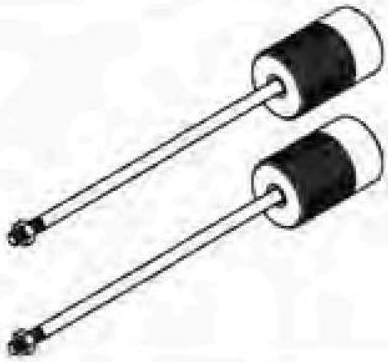	C-3752 - Slide Hammers

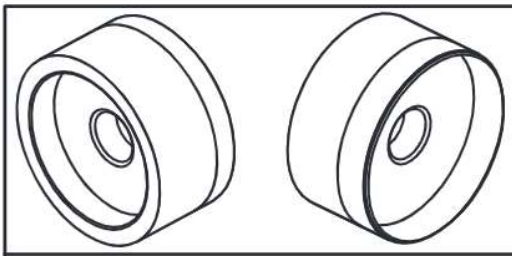	10373A - Installer Needle Bearing / Rear Oil Dam
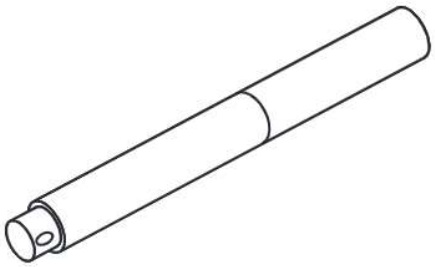	C-4171 - Driver Handle, Universal
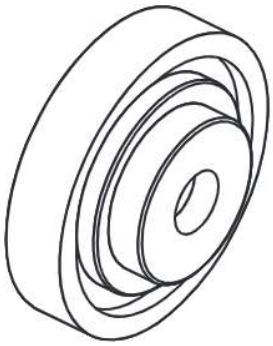	9893 - Installer, Seal
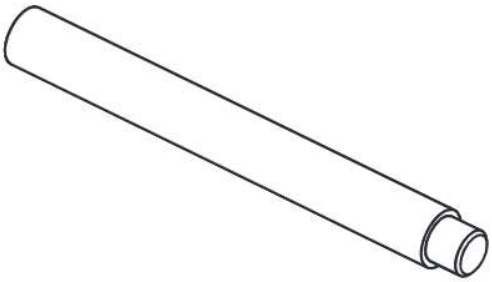	8475, Installer, Bushing
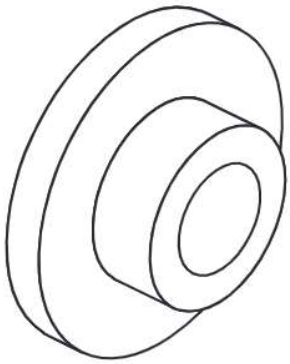	6936 - Spacer

	10373A - Installer, Oil Pump Cover Oil seal.
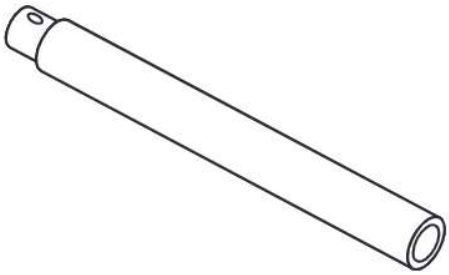	C4171-2 - Extension, Drive Handle
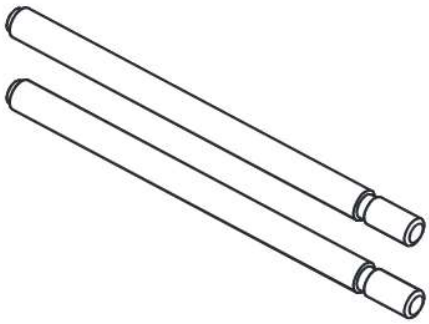	10379 - Pins, Valve Body Alignment.
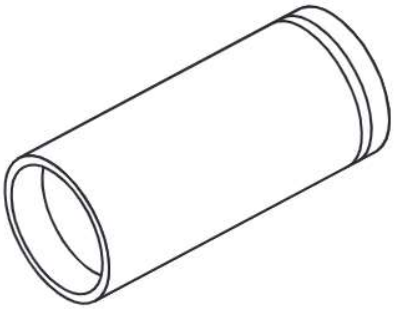	8481 - Installer, Gear
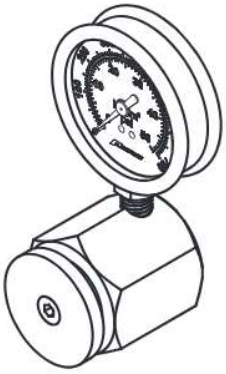	10429 - Gauge, Force

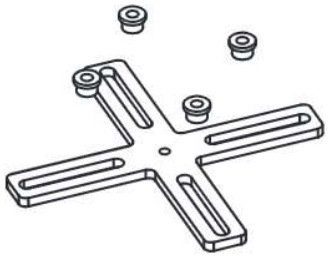	8901A - Pressing Tool
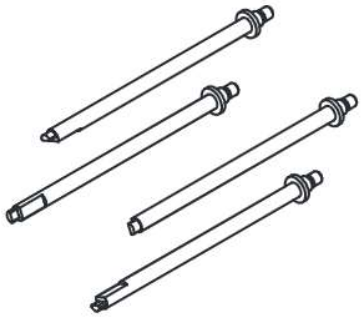	10428 - Pressing Tool Adapter

These tools are Essential Tools and Service Equipment from Mopar.

Visit https://www.moparessentialtools.com/index.aspx for additional information

CHRYSLER CORPORATION DTC's

P0219 ENGINE OVERSPEED
P0562 BATTERY/SYSTEM VOLTAGE LOW
P0563 SYSTEM VOLTAGE HIGH
P0601 INTERNAL CONTROL MODULE MEMORY CHECKSUM ERROR
P060A INTERNAL CONTROL MODULE MONITORING PROCESSOR PERFORMANCE
P0613 INTERNAL TRANSMISSION PROCESSOR
P061B INTERNAL CONTROL MODULE TORQUE CALCULATION PERFORMANCE
P062F INTERNAL CONTROL MODULE EEPROM ERROR
P0634 PCM/ECM/TCM INTERNAL TEMPERATURE TOO HIGH
P0642 SENSOR REFERENCE VOLTAGE 1 CIRCUIT LOW
P0643 SENSOR REFERENCE VOLTAGE 1 CIRCUIT HIGH
P0657 ACTUATOR SUPPLY VOLTAGE "A" CIRCUIT/OPEN
P0658 ACTUATOR SUPPLY VOLTAGE "A" CIRCUIT LOW
P0659 ACTUATOR SUPPLY VOLTAGE "A" CIRCUIT HIGH
P0666 PCM/ECM/TCM INTERNAL TEMPERATURE SENSOR 1 CIRCUIT
P0667 PCM/ECM/TCM INTERNAL TEMPERATURE SENSOR 1 PERFORMANCE
P0668 PCM/ECM/TCM INTERNAL TEMPERATURE SENSOR 1 CIRCUIT LOW
P0669 PCM/ECM/TCM INTERNAL TEMPERATURE SENSOR 1 CIRCUIT HIGH
P06AB PCM/ECM/TCM INTERNAL TEMPERATURE SENSOR "2" CIRCUIT
P06AC PCM/ECM/TCM INTERNAL TEMPERATURE SENSOR 2 PERFORMANCE
P06AD PCM/ECM/TCM INTERNAL TEMPERATURE SENSOR 2 CIRCUIT LOW
P06AE PCM/ECM/TCM INTERNAL TEMPERATURE SENSOR 2 CIRCUIT HIGH
P0710 TRANSMISSION FLUID TEMPERATURE SENSOR "A" CIRCUIT
P0712 TRANSMISSION FLUID TEMPERATURE SENSOR "A" CIRCUIT LOW
P0713 TRANSMISSION FLUID TEMPERATURE SENSOR "A" CIRCUIT HIGH
P0714 TRANSMISSION FLUID TEMPERATURE SENSOR "A" CIRCUIT INTERMITTENT
P0716 INPUT SPEED SENSOR 1 PERFORMANCE
P0721 OUTPUT SPEED SENSOR CIRCUIT PERFORMANCE
P0729 GEAR 6 SHIFT INCORRECT RATIO
P0730 INCORRECT GEAR RATIO
P0731 GEAR 1 SHIFT INCORRECT RATIO
P0732 GEAR 2 SHIFT INCORRECT RATIO
P0733 GEAR 3 SHIFT INCORRECT RATIO
P0734 GEAR 4 SHIFT INCORRECT RATIO
P0735 GEAR 5 SHIFT INCORRECT RATIO
P0741 TORQUE CONVERTER CLUTCH CIRCUIT PERFORMANCE/STUCK OFF
P0746 PRESSURE CONTROL SOLENOID "A" PERFORMANCE
P0750 SHIFT SOLENOID A CONTROL CIRCUIT / OPEN
P0755 SHIFT SOLENOID B CONTROL CIRCUIT / OPEN
P076F GEAR 7 SHIFT INCORRECT RATIO
P077C OUTPUT SPEED SENSOR CIRCUIT LOW
P077D OUTPUT SPEED SENSOR CIRCUIT HIGH
P077E TRANSMISSION FLUID TEMPERATURE - MULTIPLE SENSOR CORRELATION
P0795 PRESSURE CONTROL SOLENOID "C"
P07BF INPUT/TURBINE SPEED SENSOR 1 CIRCUIT LOW
P07C0 INPUT/TURBINE SPEED SENSOR 1 CIRCUIT HIGH
P07D9 GEAR 8 SHIFT INCORRECT RATIO
P0801 REVERSE GEAR LOCKOUT CONTROL CIRCUIT
P0810 CLUTCH POSITION CONTROL ERROR
P081C PARK INPUT CIRCUIT
P0850 PARK/NEUTRAL SWITCH PERFORMANCE
P0851 PARK/NEUTRAL SWITCH INPUT CIRCUIT LOW
P0852 PARK/NEUTRAL SWITCH INPUT CIRCUIT HIGH
P0960 PRESSURE CONTROL SOLENOID 1 CONTROL CIRCUIT/OPEN
P0961 PRESSURE CONTROL SOLENOID 1 CONTROL CIRCUIT PERFORMANCE
P0962 PRESSURE CONTROL SOLENOID 1 CONTROL CIRCUIT LOW
P0963 PRESSURE CONTROL SOLENOID "A" CONTROL CIRCUIT HIGH
P0964 PRESSURE CONTROL SOLENOID 2 CONTROL CIRCUIT OPEN

Copyright © 2017 ATSG

CHRYSLER CORPORATION DTC's

P0972 SHIFT SOLENOID 1 CONTROL CIRCUIT PERFORMANCE
P0973 SHIFT SOLENOID "A" CONTROL CIRCUIT LOW
P0974 SHIFT SOLENOID "A" CONTROL CIRCUIT HIGH
P0975 SHIFT SOLENOID B CONTROL CIRCUIT PERFORMANCE
P0976 SHIFT SOLENOID "B" CONTROL CIRCUIT LOW
P0977 SHIFT SOLENOID "B" CONTROL CIRCUIT HIGH
P0978 SHIFT SOLENOID "C" CONTROL CIRCUIT RANGE/PERFORMANCE
P0979 SHIFT SOLENOID C CONTROL CIRCUIT LOW
P0980 SHIFT SOLENOID C CONTROL CIRCUIT HIGH
P0981 SHIFT SOLENOID "D" CONTROL CIRCUIT RANGE/PERFORMANCE
P0982 SHIFT SOLENOID D CONTROL CIRCUIT LOW
P0983 SHIFT SOLENOID D CONTROL CIRCUIT HIGH
P0984 SHIFT SOLENOID "E" CONTROL CIRCUIT RANGE/PERFORMANCE
P0985 SHIFT SOLENOID "E" CONTROL CIRCUIT LOW
P0986 SHIFT SOLENOID "E" CONTROL CIRCUIT HIGH
P1601 INTERNAL TCM COMPUTER ERROR
P1614 ECU RESET/RECOVERY OCCURRED
P1634 TCM INTERNAL - INTERNAL WATCHDOG PERFORMANCE
P167A CALIBRATION MISMATCH
P1731 INCORRECT GEAR ENGAGED
P1915 TRANSMISSION INHIBITED REMOTE START
P1B13 PARK-BY-WIRE - UNINTENDED OUT OF PARK POSITION
P1B14 PARK-BY-WIRE - UNINTENDED PARK POSITION
P1C4E ABS DTC PRESENT
P1D20 MULTI MODULE HANDSHAKE FAILURE
P1D25 SHIFT CONTROL RATIONALITY
P1D6C THERMAL DAMAGE TO CLUTCHES
P1D77 PARK SOLENOID RANGE/PERFORMANCE
P1D78 PARK SOLENOID CIRCUIT LOW
P1D79 PARK SOLENOID CIRCUIT HIGH
P1D8A PARK PAWL SOLENOID CIRCUIT LOW
P1D8B PARK PAWL SOLENOID CIRCUIT HIGH
P1D8C PARK PAWL SOLENOID CIRCUIT OPEN
P1D8D PARK SENSE CIRCUIT LOW
P1D8E PARK SENSE CIRCUIT HIGH
P1D8F INCORRECT GEAR RATIO - CLUTCH 1 DEFECTIVE
P1D90 INCORRECT GEAR RATIO - CLUTCH 2 DEFECTIVE
P1D91 INCORRECT GEAR RATIO - CLUTCH 3 DEFECTIVE
P1D92 INCORRECT GEAR RATIO - CLUTCH 4 DEFECTIVE
P1D93 INCORRECT GEAR RATIO - CLUTCH 5 DEFECTIVE
P1D94 TCM INTERNAL - SBW CALIBRATION MISMATCH
P1D95 TCM CLUTCH FAILURE UNDETERMINED
P1D96 INCORRECT GEAR RATIO: CLUTCH A OR B DEFECTIVE
P1D97 INCORRECT GEAR RATIO: CLUTCH A OR D DEFECTIVE
P1D98 INCORRECT GEAR RATIO: CLUTCH B OR D DEFECTIVE
P1D99 INCORRECT GEAR RATIO: CLUTCH B OR E DEFECTIVE
P1D9A INCORRECT GEAR RATIO: CLUTCH C OR D DEFECTIVE
P1D9B INCORRECT GEAR RATIO: CLUTCH A OR E DEFECTIVE
P1D9C INCORRECT GEAR RATIO: CLUTCH A OR C DEFECTIVE
P1D9D INCORRECT GEAR RATIO: CLUTCH B OR C DEFECTIVE
P1D9E INCORRECT GEAR RATIO: CLUTCH C OR E DEFECTIVE
P1D9F INCORRECT GEAR RATIO: CLUTCH D OR E DEFECTIVE
P1DA0 INCORRECT GEAR RATIO: CLUTCH A, B, OR C DEFECTIVE
P1DA1 INCORRECT GEAR RATIO: CLUTCH A, B, OR E DEFECTIVE
P1DA2 INCORRECT GEAR RATIO: CLUTCH B, C, OR E DEFECTIVE
P1DA3 INCORRECT GEAR RATIO: CLUTCH B, D, OR E DEFECTIVE
P1DA4 INCORRECT GEAR RATIO: CLUTCH B, C, OR D DEFECTIVE
P1DA5 INCORRECT GEAR RATIO: CLUTCH C, D, OR E DEFECTIVE

Copyright © 2017 ATSG

CHRYSLER CORPORATION DTC's

P1DA6 INCORRECT GEAR RATIO: CLUTCH A, C, OR D DEFECTIVE
P1DA7 INCORRECT GEAR RATIO: CLUTCH A, D, OR E DEFECTIVE
P1DA8 INCORRECT GEAR RATIO: CLUTCH A, B, OR D DEFECTIVE
P1DA9 TRANSMISSION FLUID TEMPERATURE RATIONALITY
P1DAA TRANS TEMP UNDETERMINED
P1DAB VEHICLE SPEED UNDETERMINED
P1DAC ENGINE SPEED UNDETERMINED
P1DAD INPUT SHAFT/OUTPUT SHAFT DIRECTION CORRELATION
P1DAE POSITION VALVE STUCK - 6TH GEAR TRANS LIMP IN
P1DAF INCOMPATIBLE LIMP IN ACTION REQUESTED
P1DB0 IMPLAUSIBLE TORQUE REQUEST SIGNAL SENT
P1DB1 TCM SYSTEM VOLTAGE EXCESSIVELY LOW
P1DB2 ACTUATOR SUPPLY VOLTAGE "A" CIRCUIT
P1DB3 TCM ECU RESET/RECOVERY OCCURRED
P1DB4 INCORRECT GEAR RATIO DURING GEAR ENGAGEMENT OR IN GEAR
P1DB5 INCORRECT GEAR RATIO DURING SHIFT
P1DB6 VEHICLE SPEED SIGNAL PERFORMANCE
P1DB7 TORQUE CONVERTER CLUTCH PERFORMANCE
P1DB8 UNINTENDED TORQUE APPLIED WHILE IN NEUTRAL
P1DB9 TCM ECU RESET - EXTENDED LOW VOLTAGE
P1DC7 CLUTCH TEMP THRESHOLD ACHIEVED - SHIFT TIME REDUCTION
P1DC8 CLUTCH TEMP THRESHOLD ACHIEVED - AUTOSTICK INHIBIT
P1DC9 CLUTCH TEMP THRESHOLD ACHIEVED - SKIP SHIFT DOWN INHIBIT
P1DCA PARK SENSE CIRCUIT OPEN
P1DCD TCM MONITORING PROCESSOR PERFORMANCE - MULTIPLE CLUTCHES LOCKED UP
P1DCE TCM MONITORING PROCESSOR PERFORMANCE - INCORRECT DRIVING DIRECTION
P1DCF TCM MONITORING PROCESSOR PERFORMANCE - UNALLOWED PARK ENGAGEMENT DO TO ABS FAILURE
P1DD0 TCM MONITORING PROCESSOR PERFORMANCE - UNALLOWED PARK ENGAGEMENT
P1DD1 INPUT/TURBINE SPEED SENSOR 1 GRADIENT FAULT
P1DD2 TORQUE REQUEST SIGNAL FROM TCM DENIED
P1DDC TCM MONITORING PROCESSOR PERFORMANCE - UNALLOWED REVERSE ENGAGEMENT
P1DDD TCM MONITORING PERFORMANCE - UNABLE TO DISENGAGE DRIVE OR REVERSE
P1DDE IGNITION RUN/START INPUT 1/2 CORRELATION
P1DEB INCORRECT GEAR DISPLAYED DUE TO INCORRECT GEAR RATIO
P1DF3 ECU NOT INITIALIZED
P1DF7 ACTUAL DECREASE OF ENGINE TORQUE - LOW
P1DF8 ACTUAL DECREASE OF ENGINE TORQUE - HIGH
P1DF9 ACTUAL INCREASE OF ENGINE TORQUE - LOW
P1DFA ACTUAL INCREASE OF ENGINE TORQUE - HIGH
P215C OUTPUT SHAFT SPEED - WHEEL SPEED CORRELATION
P2713 PRESSURE CONTROL SOLENOID "D"
P2722 PRESSURE CONTROL SOLENOID "E"
P2761 TORQUE CONVERTER CLUTCH PRESSURE CONTROL SOLENOID CONTROL CIRCUIT/OPEN
P2762 TORQUE CONVERTER CLUTCH PRESSURE CONTROL SOLENOID CONTROL CIRCUIT RANGE/PERFORMANCE
P2763 TORQUE CONVERTER CLUTCH PRESSURE CONTROL SOLENOID CONTROL CIRCUIT HIGH
P2764 TORQUE CONVERTER CLUTCH PRESSURE CONTROL SOLENOID CONTROL CIRCUIT LOW
U0001 CAN C BUS
U0002 CAN C BUS OFF PERFORMANCE
U0074 DEDICATED POWERTRAIN (D-PT) CAN BUS OFF
U0100 LOST COMMUNICATION WITH ECM/PCM
U0102 LOST COMMUNICATION WITH TRANSFER CASE CONTROL MODULE / AWD
U0103 LOST COMMUNICATION WITH ELECTRIC GEAR SHIFT MODULE
U0121 LOST COMMUNICATION WITH ANTI-LOCK BRAKE SYSTEM (ABS) CONTROL MODULE
U0140 LOST COMMUNICATION WITH BODY CONTROL MODULE
U0141 LOST COMMUNICATION WITH IPM (FCM/TIPM)
U0151 LOST COMMUNICATION WITH OCCUPANT RESTRAINT CONTROLLER (ORC)

Copyright © 2017 ATSG

CHRYSLER CORPORATION DTC's

U0155 LOST COMMUNICATION WITH CLUSTER/CCN
U0212 LOST COMMUNICATION WITH SCM
U0401 IMPLAUSIBLE DATA RECEIVED FROM ECM/PCM
U0403 IMPLAUSIBLE DATA RECEIVED FROM T-CASE
U0404 IMPLAUSIBLE DATA RECEIVED FROM ESM
U0415 IMPLAUSIBLE DATA RECEIVED FROM ABS
U0422 IMPLAUSIBLE DATA RECEIVED FROM BODY CONTROL MODULE
U0423 IMPLAUSIBLE DATA RECEIVED FROM CLUSTER/CCN
U0429 IMPLAUSIBLE DATA RECEIVED FROM SCM
U0452 IMPLAUSIBLE DATA RECEIVED FROM RESTRAINTS CONTROL MODULE
U11C3 ESM LOST COMMUNICATION WITH TCM ON D-PT CAN
U11E4 CAN COMMUNICATION MESSAGES MISSING
U1400 IMPLAUSIBLE TPS SIGNAL RECEIVED
U1401 IMPLAUSIBLE ENGINE SPEED SIGNAL RECEIVED
U1412 IMPLAUSIBLE VEHICLE SPEED SIGNAL RECEIVED
U1424 IMPLAUSIBLE ENGINE TORQUE SIGNAL RECEIVED
U1461 IMPLAUSIBLE DATA RECEIVED FROM ESM ON D-PT
U1465 IMPLAUSIBLE DRIVER SHIFT REQUEST SIGNAL RECEIVED
U1466 IMPLAUSIBLE DRIVER SHIFT REQUEST SIGNAL RECEIVED ON D-PT CAN
U1467 IMPLAUSIBLE DRIVER SHIFT REQUEST SIGNAL RECEIVED ON CAN AND D-PT CAN
U1469 IMPLAUSIBLE GEAR SHIFT POSITION SIGNAL SENT D-PT CAN/CAN
U1477 IMPLAUSIBLE PADDLE SHIFTER DATA RECEIVED
U1479 IMPLAUSIBLE DATA RECEIVED FROM SHIFTER - MECHANICAL FAILURE

Copyright © 2017 ATSG

Notes

Notes