GO TO PAGE

MAZDA "6"
MAZDA "MPV"
JF506E

INDEX

INTERNAL COMPONENT LOCATIONS 3
COMPONENT APPLICATION, SHIFT SOLENOID, AND GEAR RATIO CHARTS 4
GENERAL DESCRIPTION 5
SHIFT QUADRANTS 5
FLUID REQUIREMENTS 7
ELECTRONIC COMPONENTS 7
TRANSAXLE TERMINAL IDENTIFICATION AND RESISTANCE CHARTS 11
SPEED SENSOR INFORMATION 14
SOLENOID IDENTIFICATION AND LOCATIONS 16
TRANSAXLE TO TCM WIRE SCHEMATIC (MAZDA "6") 18
TRANSAXLE TO TCM WIRE SCHEMATIC (MAZDA "MPV") 19
DIAGNOSTIC TROUBLE CODES (MAZDA "6") 20
DIAGNOSTIC TROUBLE CODES (MAZDA "MPV") 21
PLANETARY, DIFFERENTIAL, TRANSFER GEAR RATIO CHART 22
CASE PASSAGE IDENTIFICATION 23
LINE PRESSURE TEST AND SPECIFICATIONS 24
SAFETY PRECAUTIONS 26
TRANSAXLE DISASSEMBLY 26
COMPONENT REBUILD 42
TRANSAXLE CASE ASSEMBLY 42
TURBINE SHAFT 51
INTERNAL WIRING HARNESS' 52
TORQUE CONVERTER HOUSING 53
END COVER AND 2-4 CLUTCH PISTON DIFFERENCES 55
END COVER ASSEMBLY 56
REDUCTION CARRIER ASSEMBLY 58
PLANETARY GEAR TRAIN 61
DIRECT CLUTCH HOUSING 64
LOW AND REVERSE CLUTCH ASSEMBLY 68
LOW CLUTCH HOUSING ASSEMBLY 70
HIGH AND REVERSE CLUTCH HOUSING ASSEMBLY 74
OIL PUMP ASSEMBLY 80
VALVE BODY ASSEMBLY 84
CHECK BALL LOCATIONS 87
FINAL TRANSAXLE ASSEMBLY 101
THRUST BEARING AND THRUST BEARING RACE IDENTIFICATION 126
TORQUE SPECIFICATIONS 127
REDUCTION SPRAG AND LOW ROLLER CLUTCH ROTATIONS 128

AUTOMATIC TRANSMISSION SERVICE GROUP
18635 S.W. 107 AVENUE
MIAMI, FLORIDA 33157
(305) 670-4161

Copyright © ATSG 2008

INTRODUCTION
JATCO JF506E
TRANSAXLE

1st Printing
March, 2008

The JATCO 5 speed automatic transmission is known as the JF506E in the Jaguar X Type and Land Rover's Freelander. In the Mazda 6 and MPV it is known as the JA5A-EL and with VW's Golf, GTI and Jetta it is the 09A. Overseas it is known as the 5F1J or the Durashift -5-Tronic transmission used in the Mondeo vehicle starting in 2002.5 model year. It is based on an earlier AG5 transmission used in the 2000 Galaxy which is a fully automatic and electronically controlled front wheel drive transmission. The JF5 transmission ratios are achieved with 3 planetary gear sets that are held and/or driven by 4 multi-plate drive clutches, 2 multi-plate brake or holding clutches, 1 band and 2 one-way holding devices. The internal components locations and names are identified in Figure 1.

This manual contains the procedures necessary to diagnose, overhaul and/or repair the Mazda JF506E transaxle, and is intended for automotive technicians that are familiar with the operation of automatic transmissions.

Note: There have been many engineering changes in this transaxle since its introduction in 1999. ATSG also has available an "Update Handbook" which includes the many changes and is required along with this manual for a proper overhaul or repair.

We wish to thank Mazda Motor Company for the information and illustrations that have made this booklet possible.

No part of any ATSG publication may be reproduced, stored in any retrieval system or transmitted in any form or by any means, including but not limited to electronic, mechanical, photocopying, recording or otherwise, without ***written*** permission of Automatic Transmission Service Group. This includes all text illustrations, tables and charts.

The information and part numbers contained in this booklet have been carefully compiled from industry sources known for their reliability, but ATSG does not guarantee its accuracy.

Copyright © ATSG 2008

WAYNE COLONNA
PRESIDENT

DALE ENGLAND
FIELD SERVICE CONSULTANT

PETER LUBAN
TECHNICAL CONSULTANT

JON GLATSTEIN
TECHNICAL CONSULTANT

JERRY GOTT
TECHNICAL CONSULTANT

GERALD CAMPBELL
TECHNICAL CONSULTANT

JIM DIAL
TECHNICAL CONSULTANT

ED KRUSE
TECHNICAL CONSULTANT

GREGORY LIPNICK
TECHNICAL CONSULTANT

DAVID CHALKER
TECHNICAL CONSULTANT

ROLAND ALVAREZ
TECHNICAL CONSULTANT

MIKE SOUZA
TECHNICAL CONSULTANT

AUTOMATIC TRANSMISSION SERVICE GROUP
18635 S.W. 107 AVENUE
MIAMI, FLORIDA 33157
(305) 670-4161

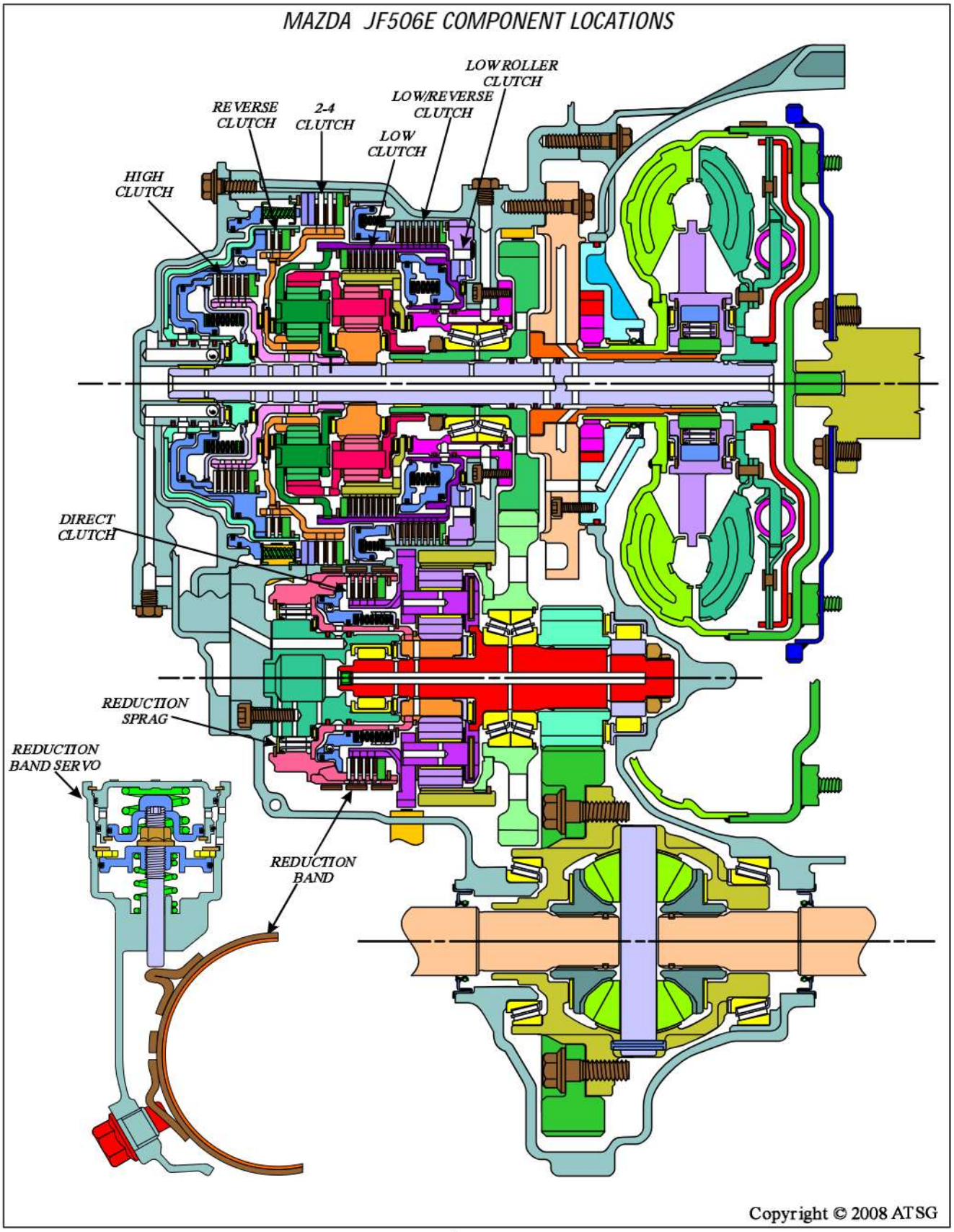
MAZDA JF506E COMPONENT LOCATIONS
LOW ROLLER CLUTCH
LOW/REVERSE CLUTCH
REVERSE CLUTCH
2-4 CLUTCH
LOW CLUTCH
HIGH CLUTCH
DIRECT CLUTCH
REDUCTION SPRAG
REDUCTION BAND SERVO
REDUCTION BAND
Copyright © 2008 ATSG

Figure 1

COMPONENT APPLICATION INFORMATION

Refer to Figure 1 for internal component locations and Figure 2 for the application of the components for each gear, along with the shift solenoid sequence for each gear. This will help you in diagnosis of the JF506E transaxle.

Also in Figure 2, you will find the planetary gear ratios for each of the different manufacturers and you will notice that they will not all interchange. Use care if replacement parts are required.

COMPONENT APPLICATION CHARTS

JF506E COMPONENT APPLICATION CHART

Mazda MPV RANGE	GEAR	Low Clutch	2-4 Clutch	High Clutch	Reverse Clutch	Low/ Reverse Clutch	Reduction Band	Direct Clutch	Low Roller Clutch	Reduction Sprag	Shift Solenoids			
												SSA	SSB	SSC
Park/Neutral							On							
Reverse	R				On	On	On							
"D" OD Cancel "OFF"	1st	On					On		Hold	Hold			On	On
	2nd	On	On				On			Hold		On	On	
	3rd	On		On			On			Hold			On	
	4th		On	On			On			Hold				On
	5th		On	On				On				On		On
"D" OD Cancel "ON"	1st	On					On		Hold	Hold			On	On
	2nd	On	On				On			Hold		On	On	
	3rd	On		On						Hold			On	
	4th		On	On										On
"3"	2nd	On	On				On			Hold		On	On	
	3rd	On		On									On	
"2"	2nd	On	On				On					On	On	

Transaxle Range Selector Indicators vary in the number of range positions between vehicle users. There are 4, 6, and 7 position indicators. The example shown above is for the Mazda MPV, six position indicator. Mazda "6" is equipped with a "Manual Switch" and "Slap-Stick" capability, and the Mazda "MPV" is equipped with an OD cancel switch.

Mazda "6" Indicator
P R N D

Mazda "MPV" Indicator
P R N D 3 2

JF506E PLANETARY GEAR RATIOS

	Maxda 6 3.0L V6	Maxda MPV 3.0L V6	Land Rover Freelander 2.5L V6	Land Rover Freelander Turb Diesel	Jaguar X Type 2.0L/2.5L/3.0L	VW Golf 1.9L Diesel	VW Jetta 1.8L/2.8L	VW GTI 1.8L
1st Gear	3.801	3.801	3.474	3.801	3.801	3.801	3.801	3.801
2nd Gear	2.131	2.131	1.948	2.131	2.131	2.131	2.131	2.131
3rd Gear	1.364	1.364	1.247	1.364	1.364	1.364	1.364	1.364
4th Gear	0.935	0.935	0.854	0.935	0.935	0.935	0.935	0.935
5th Gear	0.685	0.685	0.685	0.685	0.685	0.685	0.685	0.685
Reverse	2.970	2.970	2.714	2.970	2.970	2.970	2.970	2.970
Differential	3.23	3.04	3.04	2.87	3.23	Transaxle Code "EEB" = 3.45 Transaxle Code "EYN" = 3.45 Transaxle Code "EEF" = 2.70		

Copyright © 2008 ATSG

Figure 2

GENERAL DESCRIPTION

The new JATCO JF506E is a fully automatic, five speed, front wheel drive, electronic controlled transaxle. It consists primarily of a four element torque converter, three planetary gear sets, six multiple disc clutch packs, one brake band, one sprag, one roller clutch, and a hydraulic pressurization and control system.

The four element torque converter contains a pump, a turbine, a pressure plate splined to the turbine, and a stator assembly. The torque converter acts as a fluid coupling to smoothly transmit power from the engine to the transmission. It also hydraulically provides additional torque multiplication when required. The pressure plate, when applied, provides a mechanical "direct drive" coupling of the engine to the turbine shaft of the transmission.

The three planetary gear sets provide the five forward gear ratios and reverse. Changing gear ratios is fully automatic and is accomplished through the use of a Transmission Control Module (TCM) located in the vehicle. The TCM receives and monitors various electronic sensor inputs, and uses this information to shift the transmission at the optimum time.

The TCM commands six On/Off solenoids and three Duty Cycle solenoids within the transaxle to control desired gear ratio, shift timing, and line prressure. The TCM also controls the apply and release of the torque converter clutch which allows the engine to deliver the maximum fuel efficiency without sacrificing vehicle performance.

The hydraulic system primarily consists of a rotor type pump, three control valve bodies, converter housing and case. The pump maintains the working pressures needed to apply the clutch pistons that apply or release the friction components. These friction components, when applied or released, support the shifting qualities of the transmission.

The friction components used in this transmission consist of six multiple disc clutches. The multiple disc clutch packs combine with one band, one mechanical sprag clutch, one mechanical roller clutch, to deliver six different gear ratios through the gearsets that then transfer torque through the output shaft. Refer to Figure 1 for component locations and to Figure 2 for the component application chart for this transaxle.

SHIFT QUADRANTS

The Mazda "6" has a four detent shift quadrant, as shown in Figure 3, along with a "Manual" mode, that allows the driver to select the range of gears available, by tapping the selector lever towards the "-" or "+" to downshift or upshift.

The Mazda "MPV" has a six detent shift quadrant. as shown in Figure 4, along with an OD/OFF switch on the shift lever to cancel overdrive. The shift lever must be used to manually select any of the lower gears.

Mazda "6" Shift Quadrant

P When the Park position is selected, there is no powerflow through the transaxle. The parking pawl is engaged which locks the output shaft to the case. The engine can be started and the ignition key can be removed.

R When the Reverse position is selected, the vehicle can be operated in a rearward direction at a reduced gear ratio.

N When the Neutral position is selected, there is no powerflow through the transaxle. The output shaft is not held and is free to rotate and the engine can be started. This position can also be selected while the vehicle is moving, to restart the engine if that becomes necessary.

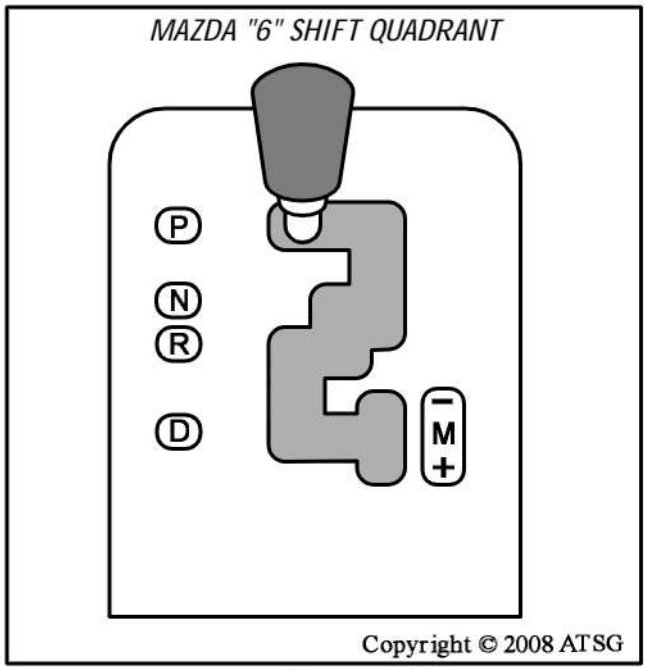

Figure 3

Mazda "6" Shift Quadrant (Cont'd)

D The Drive position is the normal position for most forward gear operations. The Drive position provides automatic upshifts and downshifts, apply and release of the converter clutch, and maximum fuel economy during normal operation. Drive range allows the transaxle to operate in each of the five forward gear ratios. Downshifts are available for safe passing, by depressing the accelerator.

M When the Manual position is selected, it enables the driver to select the range of gears by tapping the selector lever towards the "-" or "+" to cause the transaxle to downshift or upshift, and is shown in Figure 3. These ranges can be used for conditions where it may be desirable to control the selection of gear ratios. These conditions include trailer towing, hilly terrain, starting on slippery surfaces, and for engine braking when descending slight grades.

Mazda "MPV" Shift Quadrant

P When the Park position is selected, there is no powerflow through the transaxle. The parking pawl is engaged which locks the output shaft to the case. The engine can be started and the ignition key can be removed.

R When the Reverse position is selected, the vehicle can be operated in a rearward direction at a reduced gear ratio.

N When the Neutral position is selected, there is no powerflow through the transaxle. The output shaft is free to rotate and the engine can be started. This position can also be selected while the vehicle is moving to restart the engine, if necessary.

Mazda "MPV" Shift Quadrant (Cont'd)

D The Drive position is the normal position for most forward gear operations. The Drive position provides automatic upshifts and downshifts, apply and release of the converter clutch, and maximum fuel economy during normal operation. Drive range allows the transaxle to operate in each of the five forward gear ratios. Downshifts are available for safe passing, by depressing the accelerator. Driver may also cancel overdrive (5th gear), by pressing the OD/OFF button on the end of the shift lever, as shown in Figure 4. This action will illuminate the OD/OFF lamp on the instrument panel

3 Manual "3" position provides a 2nd gear start with an upshift to 3rd at approximately 15 mph, but prevents transaxle from shifting above 3rd gear, and adds more performance and engine braking for hilly terrain. Manual 3 can be selected at any vehicle speed, but will not downshift until vehicle speed calibrated into the TCM has been reached, to prevent engine over-speed.

2 Manual "2" position provides a 2nd gear start and hold for slippery surfaces, and provides engine braking for hilly terrain. Manual 2 can be selected at any vehicle speed, but will not downshift until vehicle speed calibrated into the TCM has been reached, to prevent engine over-speed.

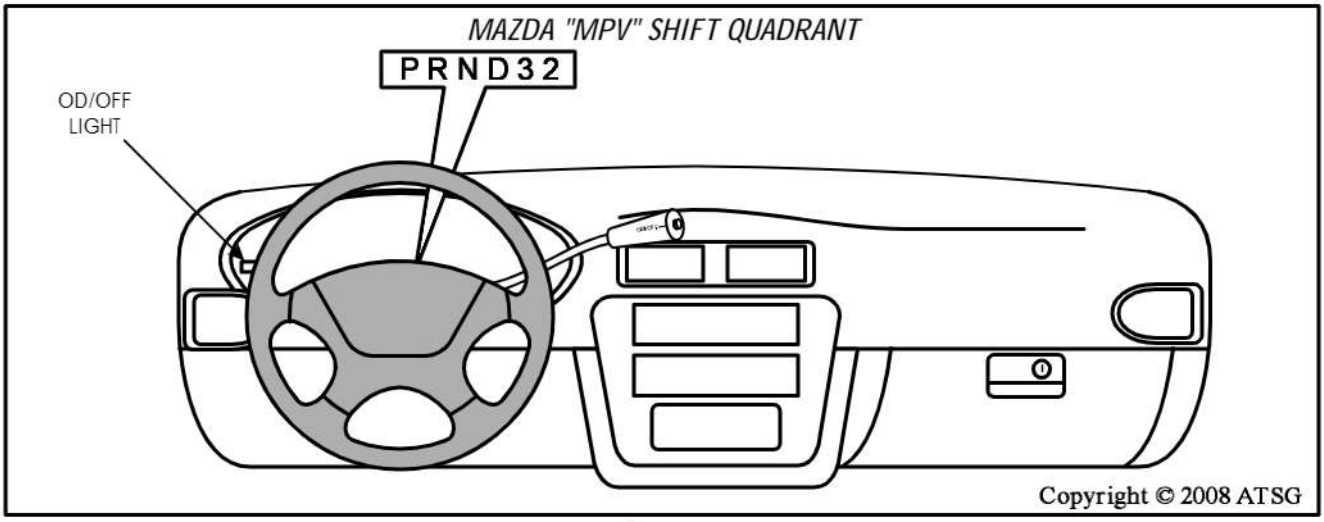

Figure 4

FLUID REQUIREMENTS

Mazda "6" And Mazda "MPV"

Fluid requirements are the same for the Mazda "6" and the Mazda "MPV". Both units are filled through the dipstick tube. The fluid should be checked while hot at 60-70°C (149-158°F) and should be at the level on dipstick, as shown in Figure 5. The drain plug is on the bottom of the converter housing part of the case, just in front of where the two case pieces split.

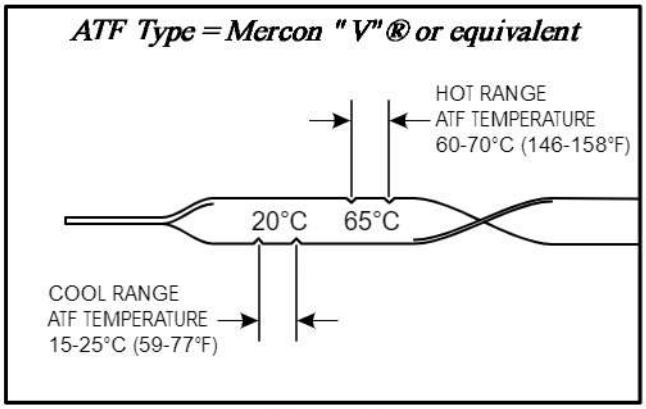

Figure 5

ELECTRONIC COMPONENTS

Transaxle Range Selector Switch

The Transaxle Range/Gear Select Switch is located on the outside of transaxle, as shown in Figure 6 and Figure 7. The range selector on the Mazda will have two different indicators depending on whether you have a Mazda "6" or a Mazda "MPV". The Mazda "6" will have four positions (P R N D) and the Mazda "MPV" will have six positions, (PRND32) as shown in Figure 6 and Figure 7.

The electrical connector for the Range Switch is hard wired to, and part of, the Transaxle Range Selector Switch, as shown in Figure 6 and 7, and as you might expect are wired differently, and will not interchange.

Continued on Page 8

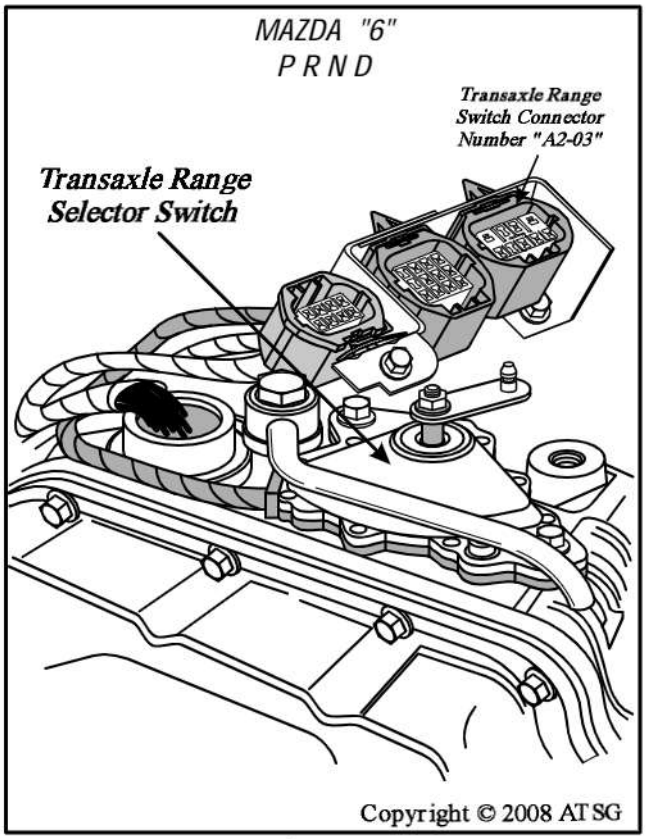

Figure 6

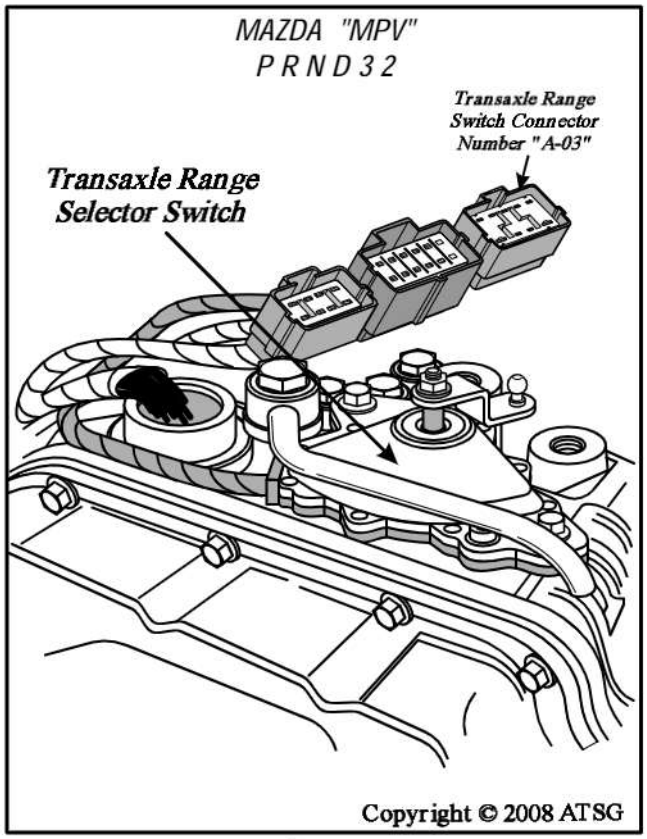

Figure 7

Transaxle Range Selector Switch (Cont'd)

We have provided you with individual connector views, wire schematics and continuity charts for both the Mazda "6" and "MPV" in Figure 8 and 9. Although the charts in Figure 8 and 9 are used to check the integrity of the switch's range selection, using an Ohmmeter, the best method, is to check the range switch in the vehicle with a Volt meter.

By looking at the charts in Figure 8 and 9, it can be seen that terminal "C" is the common terminal for all range selections. This is the voltage supply into the switch. Terminals "H" and "B" are used for starting purposes only. With the ignition switch "ON", there must battery voltage at terminal "C". If there is not, this must be repaired first. If voltage is present, it should exit the assigned terminal in each gear selection.

Notice also the Mazda "6" has a manual switch in the selector lever that allows manual shifting up and down. The Mazda "MPV" is not equipped with the manual mode, but is equipped with an overdrive cancel button.

Electronic Components Continued on Page 9

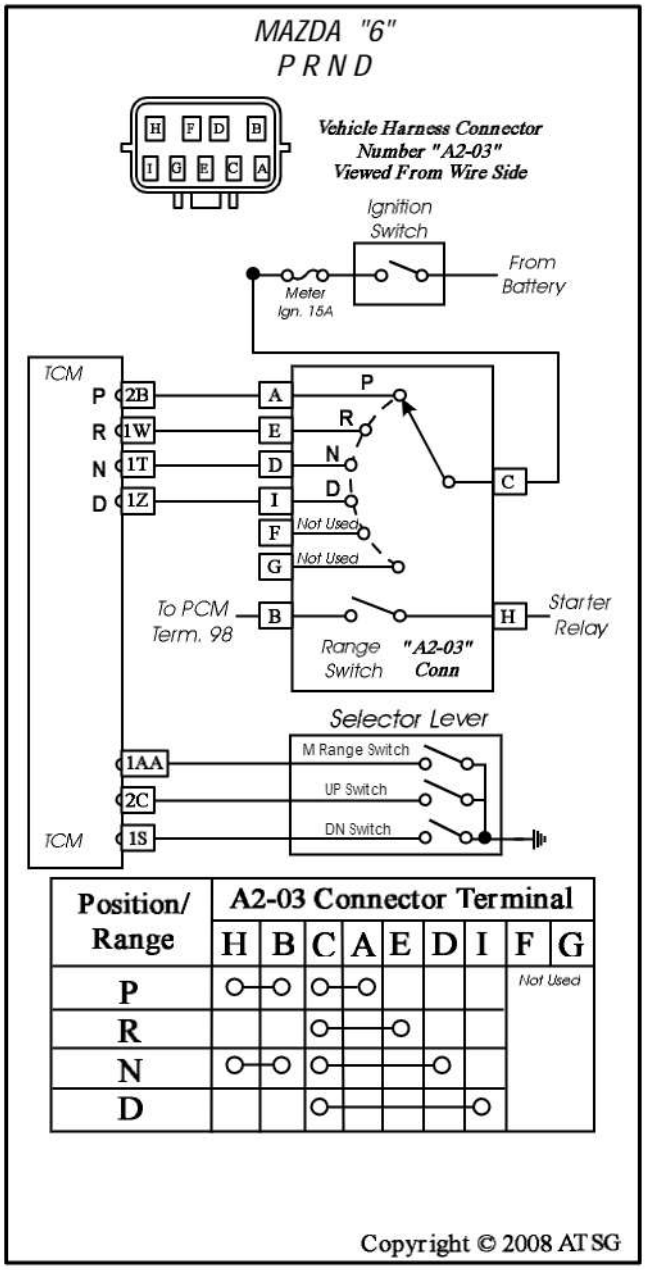

Position/ Range	A2-03 Connector Terminal								
	H	B	C	A	E	D	I	F	G
P	○	○	○	○				Not Used	
R			○		○				
N	○	○	○			○			
D			○				○		

Figure 8

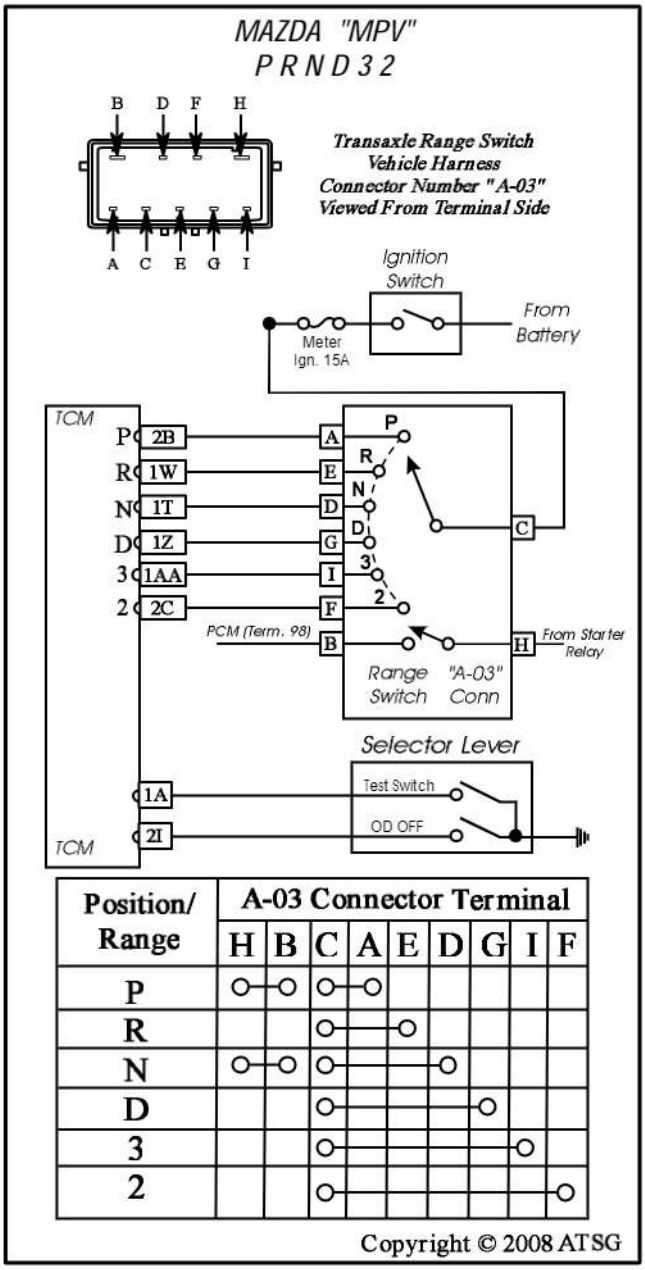

Position/ Range	A-03 Connector Terminal								
	H	B	C	A	E	D	G	I	F
P	○	○	○	○					
R			○		○				
N	○	○	○			○			
D			○				○		
3			○					○	
2			○						○

Figure 9

ELECTRONIC COMPONENTS (CONT'D)

Electrical Connectors and Wire Harness

The JF506E transaxles all have a complex wire harness set-up, compared to previous units. On the Mazda units there are two ***external*** case connectors, as shown in Figure 10 and 11. One connector that provides voltage for all of the 9 solenoids, and one connector that provides a path for the three speed sensors and the TFT sensor. Both of these connectors merge into one harness, go through a "Pass-thru" connector, and once again split into two more connectors ***internally***. One connector with eight terminals for the three speed sensors and the TFT sesnor, and one connector with ten terminals for the 9 solenoids and a ground. Refer to Figure 10 for the Mazda "6" version and Figure 11 for the Mazda "MPV" version. The Mazda "6" has a metal bracket that the connectors snap into and the Mazda "MPV" does not use a bracket. If any of these connectors are damaged, a complete wiring harness is required. Both of the external wiring harness' are illustrated in Figure 12.

There is an internal wire harness that plugs into the 10-way internal connector and runs to each of the 9 solenoids and provides an internal ground.

There is also an internal harness that plugs into the 8-way internal connector that provides a path for all three speed sensors and the Transaxle Fluid Temp (TFT) sensor. Of course then there are connectors at each of the 9 solenoids, and more connectors at each of the 3 speed sensors and the TFT sensor. These internal harness' can also be seen in Figure 10 and 11. The internal harness' are the same on both the Mazda "6" and "MPV". The internal solenoid harness is also illustrated in Figure 12.

This makes the electronic diagnostic process a challenge, to say the very least, with a variety of connectors that may have corrosion or damage. We have provided you with individual terminal identification for the external and the internal connectors, and a resistance chart in Figure 14 for the Mazda "6", and Figure 15 for the "MPV".

Terminal identification for the TCM is found in Figure 16, and is the same for both models.

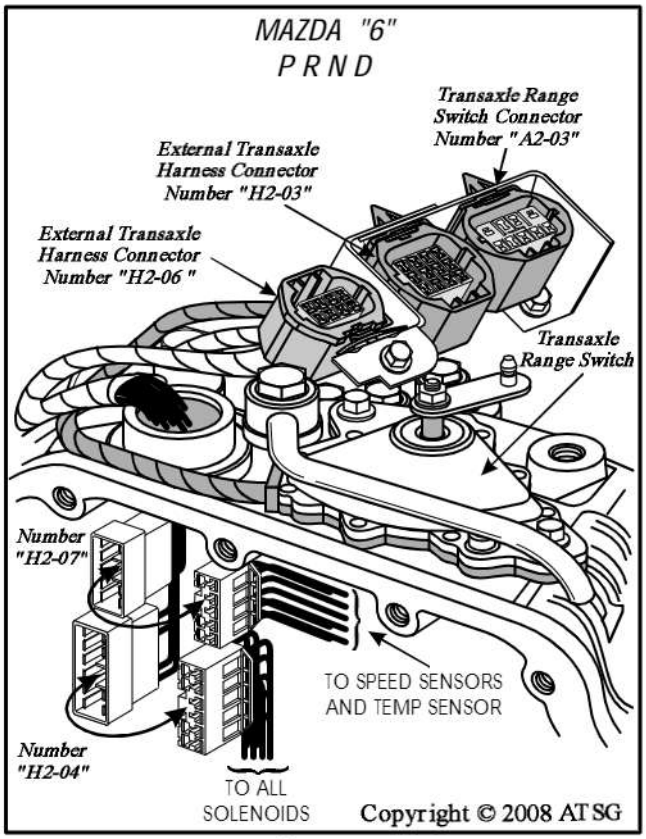

Figure 10

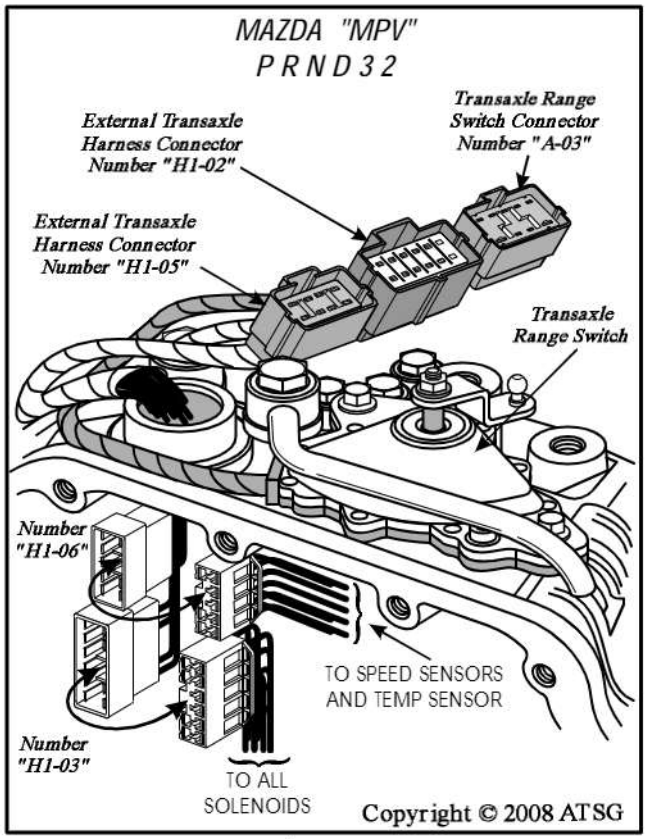

Figure 11

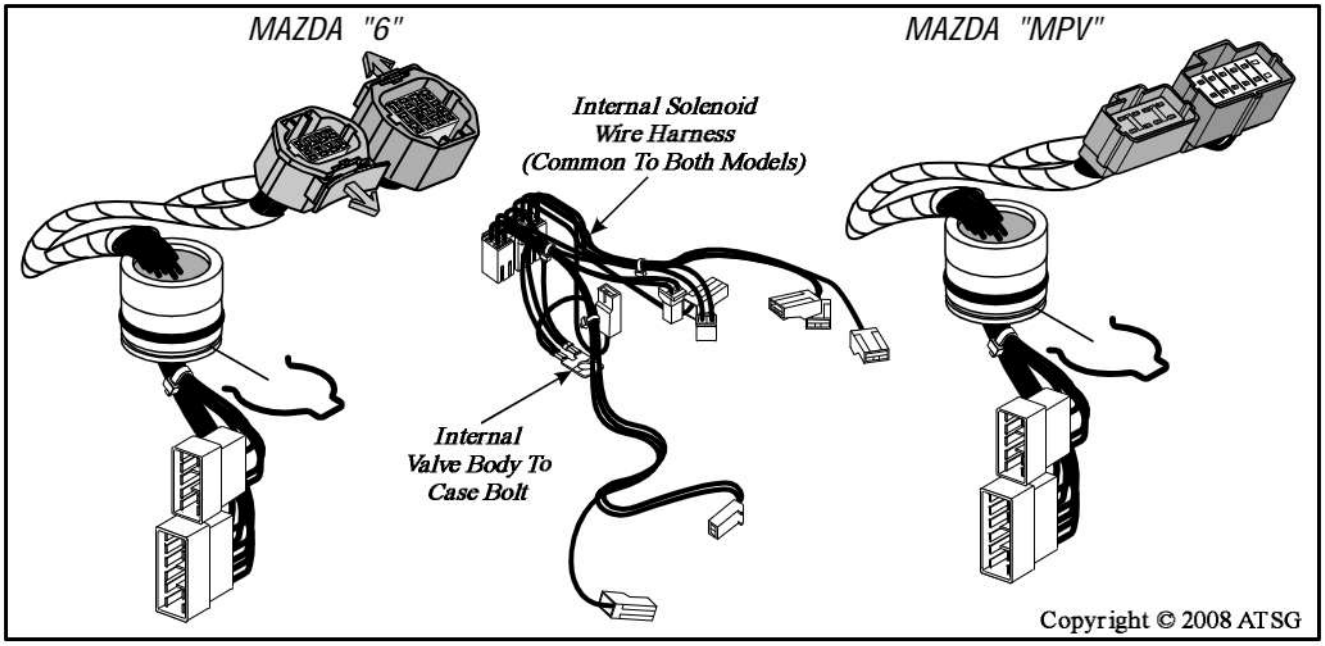

Figure 12

ELECTRONIC COMPONENTS (CONT'D)

Transaxle Fluid Temperature (TFT) Sensor

The Transaxle Fluid Temp (TFT) Sensor is located inside of the transaxle case housing, as shown in Figure 13, and requires disassembly if replacement becomes necessary. Resistance of the TFT sensor decreases as the fluid temperature increases, as shown in the chart in Figure 13.

Input from the TFT is used by the TCM for converter clutch apply, torque reduction and fifth gear operation. To promote engine warm up during cold weather operation, the TCM may inhibit TCC apply until transaxle fluid temperature has reached approximately 104°F (40°C). Fifth gear may also be prohibited during cold weather operation, or when the TFT malfunctions. Torque reduction may also be inhibited when the TFT malfunctions. Use the charts for terminal identification in Figure 14 and 15 to check the TFT sensor, and the resistance chart in Figure 13 to verify.

The TFT sensor may produce code P0711 (sensor signal stuck), code P0712 (shorted circuit), or code P0713 (open circuit).

ATF Temperature (°C {°F})	Resistance (kilohm)
-20 {-4}	15.87-17.54
0 {32}	5.73-6.33
20 {68}	2.38-2.63
40 {104}	1.10-1.22
60 {140}	0.56-0.62
80 {176}	0.31-0.34
100 {212}	0.18-0.20
120 {248}	0.11-0.12
130 {266}	0.09-0.10

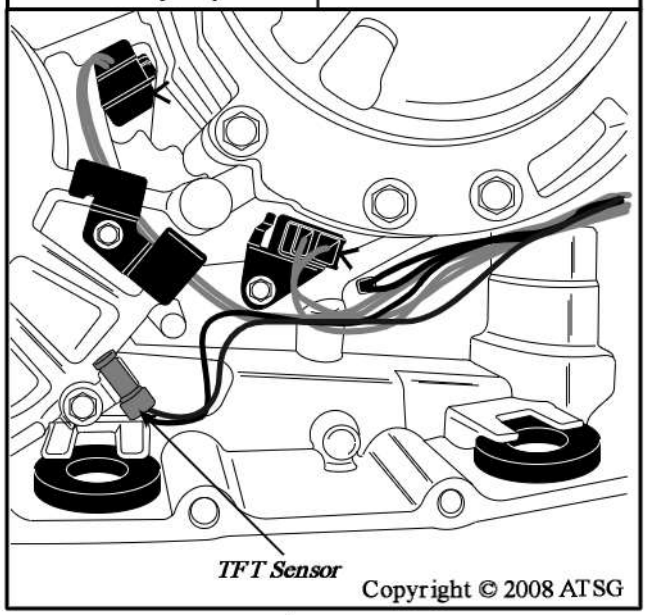

Figure 13

2004 MAZDA "6" TRANSAXLE TERMINAL I.D. AND RESISTANCE CHART

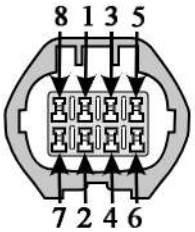

External Transaxle Harness Connector Number "H2-06" (Face View)

1 & 2 = Turbine Shaft Speed Senor	*(513 to 627 ohms)*
3 & 4 = Intermediate Shaft Speed Sensor	*(513 to 627 ohms)*
5 & 6 = Output Shaft Speed Senor	*(513 to 627 ohms)*
7 & 8 = Temperature Sensor	*(Refer to page 10)*

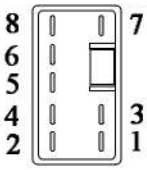

Internal Transaxle Harness "Male" Coupler Connector Number "H2-07" (Face View)

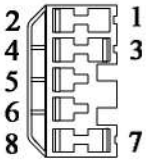

Internal Transaxle Harness "Female" Coupler Connector Number "H2-07" (Face View)

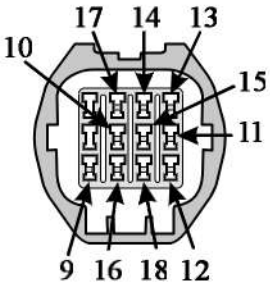

External Transaxle Harness Connector Number "H2-03" (Face View)

9 & 10 = Neutral Shift Solenoid	*(14 to 18 ohms)*
9 & 11 = TCC Solenoid	*(12 to 13.2 ohms)*
9 & 12 = 2/4 Brake Solenoid	*(2.6 to 3.2 ohms)*
9 & 13 = High Clutch Solenoid	*(2.6 to 3.2 ohms)*
9 & 14 = Shift Solenoid C	*(14 to 18 ohms)*
9 & 15 = Reduction Timing Solenoid	*(14 to 18 ohms)*
9 & 16 = Shift Solenoid B	*(14 to 18 ohms)*
9 & 17 = Shift Solenoid A	*(14 to 18 ohms)*
9 & 18 = Pressure Control Solenoid	*(2.6 to 3.2 ohms)*

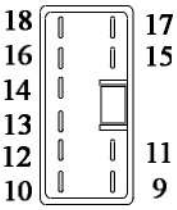

Internal Transaxle Harness "Male" Coupler Connector Number "H2-04" (Face View)

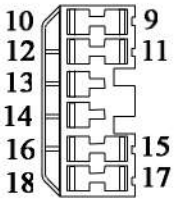

Internal Transaxle Harness "Female" Coupler Connector Number "H2-04" (Face View)

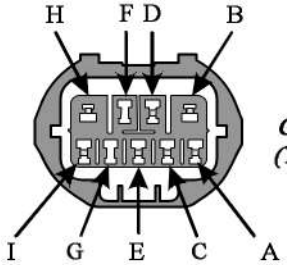

Transaxle Range Switch Connector Number "A2-03" (Terminal F and G Not Used) (Face View)

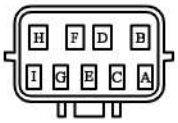

Transaxle Range Switch Vehicle Harness (Wire Side) Connector Number "A2-03" (Terminal F and G Not Used)

Copyright © 2008 ATSG

Figure 14

2004 MAZDA "MPV" TRANSAXLE TERMINAL I.D. AND RESISTANCE CHART

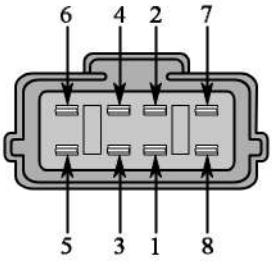

External Transaxle Connector Number "H1-05" (Face View)

1 & 2 = Turbine Shaft Speed Senor	*(513 to 627 ohms)*
3 & 4 = Intermediate Shaft Speed Sensor	*(513 to 627 ohms)*
5 & 6 = Output Shaft Speed Senor	*(513 to 627 ohms)*
7 & 8 = Temperature Sensor	*(Refer to page 10)*

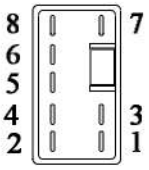

Internal Transaxle Harness "Male" Coupler Connector Number "H1-06" (Face View)

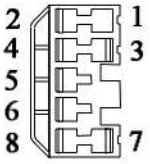

Internal Transaxle Harness "Female" Coupler Connector Number "H1-06" (Face View)

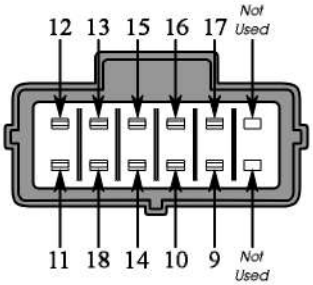

External Transaxle Connector Number "H1-02" (Face View)

9 & 10 = Neutral Shift Solenoid	*(14 to 18 ohms)*
9 & 11 = TCC Solenoid	*(12 to 13.2 ohms)*
9 & 12 = 2/4 Brake Solenoid	*(2.6 to 3.2 ohms)*
9 & 13 = High Clutch Solenoid	*(2.6 to 3.2 ohms)*
9 & 14 = Shift Solenoid C	*(14 to 18 ohms)*
9 & 15 = Reduction Timing Solenoid	*(14 to 18 ohms)*
9 & 16 = Shift Solenoid B	*(14 to 18 ohms)*
9 & 17 = Shift Solenoid A	*(14 to 18 ohms)*
9 & 18 = Pressure Control Solenoid	*(2.6 to 3.2 ohms)*

CAUTION: Even though there are two blank terminals in the external transaxle connector "H1-02" as shown here, the mating connector from the TCM has two wires in these locations that are not used.

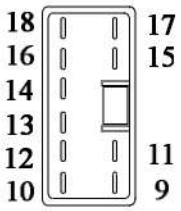

Internal Transaxle Harness "Male" Coupler Connector Number "H1-03" (Face View)

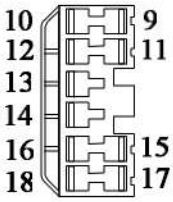

Internal Transaxle Harness "Female" Coupler Connector Number "H1-03" (Face View)

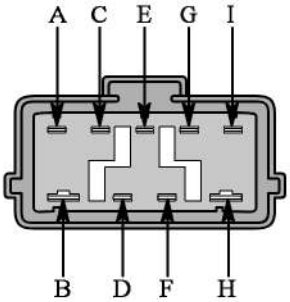

Transaxle Range Switch Connector Number "A-03" (Face View)

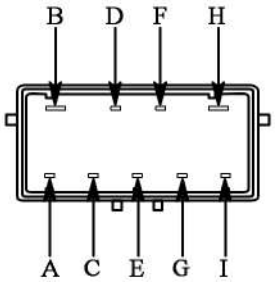

Transaxle Range Switch Vehicle Harness (Face View) Connector Number "A-03"

Copyright © 2008 ATSG

Figure 15

TCM TERMINAL ID

WIRE HARNESS CONNECTOR VIEW

2004 Mazda "6" 3.0L Engine And 2004 Mazda "MPV" 3.0L Engine

1Y	1V	1S	1P	1M	1J	1G	1D	1A
1Z	1W	1T	1Q	1N	1K	1H	1E	1B
1AA	1X	1U				1I	1F	1C

2Y	2V	2S	2P	2M	2J	2G	2D	2A
2Z	2W	2T	2Q	2N	2K	2H	2E	2B
2AA	2X	2U				2I	2F	2C

Input Shaft Speed Sensor

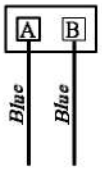

Intermediate Shaft Speed Sensor

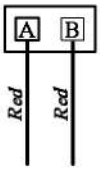

Output Shaft Speed Sensor

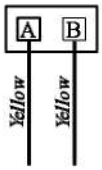

Transaxle Fluid Temp Sensor

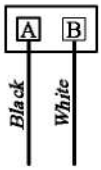

Wire Colors May Vary

Copyright © 2008 ATSG

Figure 16

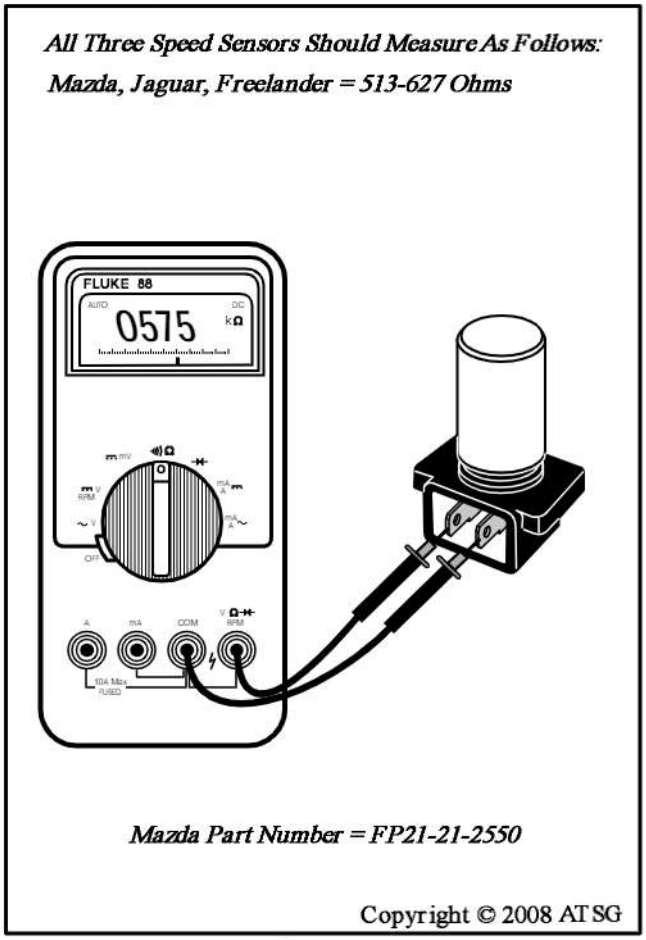

Figure 17

ELECTRONIC COMPONENTS (CONT'D)

SPEED SENSORS

There are three inductive type speed sensors located inside of the transaxle case housing and are not accessible from outside. Disassembly is required, if replacement becomes necessary. The Turbine Shaft Speed sensor is the only one that can be accessed in the vehicle, by removing the rear cover, as shown in Figure 18. The other two speed sensors require transaxle removal, and splitting the case. The speed sensors are, Turbine Shaft Speed Sensor, Intermediate Shaft Speed Sensor and the Output Shaft Speed Sensor. Electrical connections to all of the speed sensors and TFT sensor come through the external connector and the 8-way internal connector to reach these components.

All three speed sensors are the same, but different brackets are used to mount them in their proper locations. Amazingly the Mazda, Jaguar, and Freelander are all using the same speed sensor. All 3 speed sensors should measure the same resistance at 68°F (20°C), as shown in Figure 17, and can also be checked through the appropriate terminals on the external case connector, shown in Figure 14 and 15.

Continued on Page 15

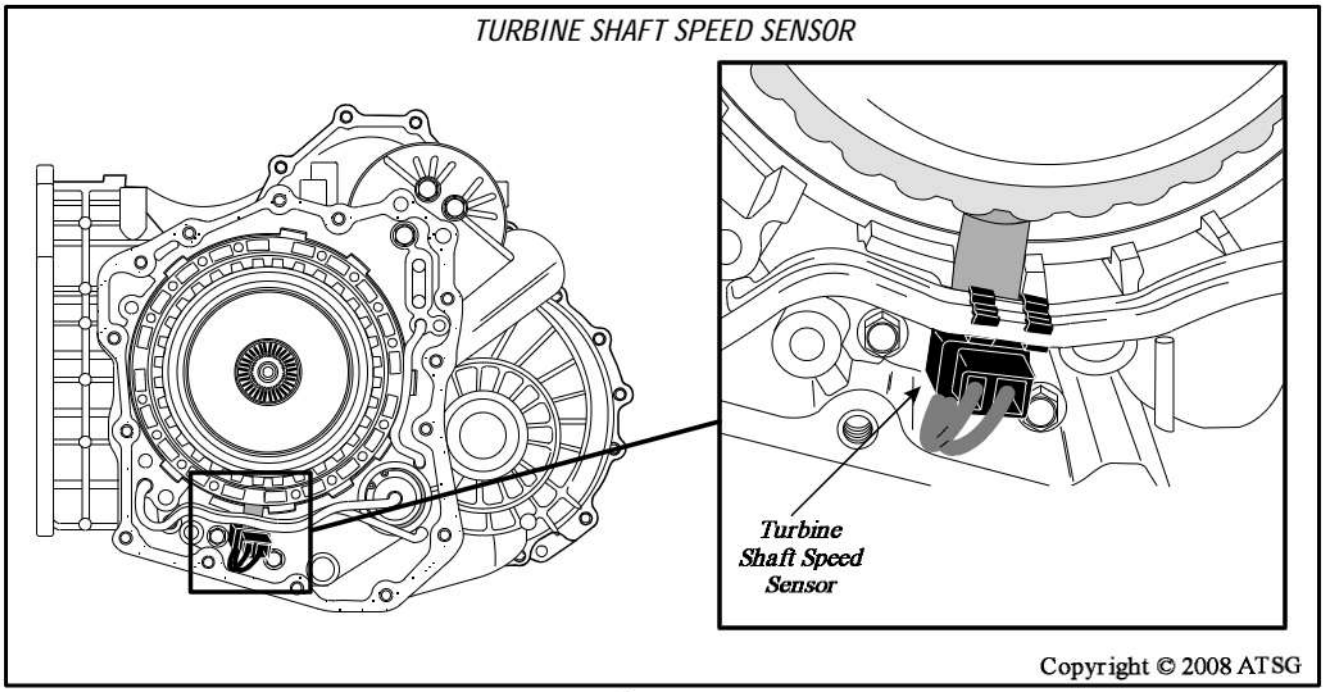

Figure 18

SPEED SENSORS (CONT'D)

Turbine Shaft Speed Sensor

The Turbine Shaft Speed sensor is positioned, as shown in Figure 18, to read the high/reverse clutch housing which is splined to the turbine shaft. The TSS sensor detects a pulse signal from the lugs on the outside of the high/reverse clutch housing. The speed sensors can be checked externally, as shown in Figure 17. The Turbine Shaft Speed sensor is the only one that can be accessed in the vehicle, by removing the rear cover, as shown in Figure 18.

The information from the TSS sensor is used by the TCM to monitor gear ratio, line pressure control and to monitor and control TCC apply. This sensor may produce a Diagnostic Trouble Code (DTC) P0715, Turbine Shaft Speed sensor circuit code.

Intermediate Shaft Speed Sensor

The Intermediate Shaft Speed sensor is positioned, as shown in Figure 19, to read the transfer "Drive" gear, which is driven by the 1st and 2nd planetary gearset. The sensor detects a pulse signal according to the teeth on the transfer drive gear. Since there are various ratios, the tooth count will vary.

The input of the intermediate shaft speed sensor is used by the TCM to calculate the timing of engagements and disengagements of the brake clutches, and to monitor gear ratio. This sensor may produce a Diagnostic Trouble Code (DTC) P0791, Intermediate Shaft Speed sensor circuit code.

Output Shaft Speed Sensor

The Output Shaft Speed sensor is positioned, as shown in Figure 19, to read the "Park Gear", which is driven by the output shaft. The sensor detects a pulse signal according to the lugs on the park gear.

The input of the output shaft speed sensor is used by the TCM to provide a vehicle speed signal, calulate shift timing, line pressure control, and to monitor gear ratio. This sensor may produce a Diagnostic Trouble Code (DTC) P0720, Output Shaft Speed sensor circuit code.

INTERMEDIATE SHAFT AND OUTPUT SHAFT SPEED SENSORS

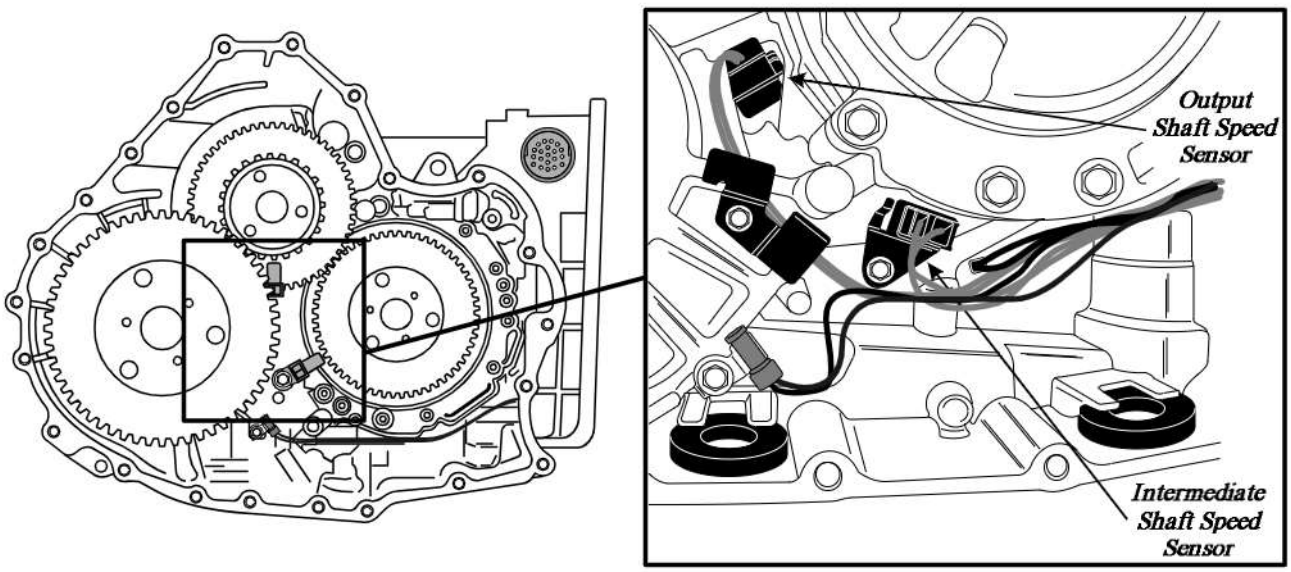

Copyright © 2008 ATSG

Figure 19

SOLENOID IDENTIFICATION AND LOCATIONS

There are a total of nine (9) solenoids used on all models, which can be classified as two different types, because of the way in which they operate. Four of them are duty cycle solenoids, the other five are On/Off solenoids. Solenoid names and functions are different between the manufacturers. All solenoids in all models are actuated (energized) by a voltage feed from the TCM.

Mazda Solenoids

The Mazda solenoid locations and names are identified for you in Figure 20, and are the same for both Mazda "6" and Mazda "MPV". The shift solenoid firing sequence is the same on all models, and is also shown in Figure 20.

MAZDA SOLENOID IDENTIFICATION AND LOCATIONS

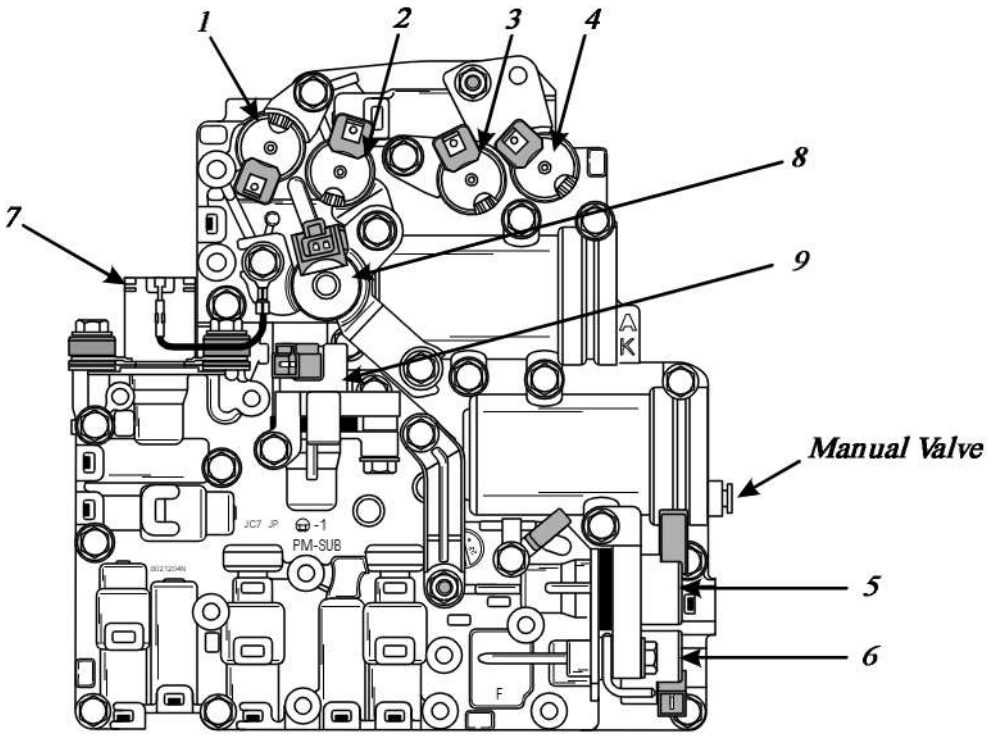

Shift Solenoid Application Chart					
Solenoid	***1st***	***2nd***	***3rd***	***4th***	***5th***
SSA		***ON***			***ON***
SSB	***ON***	***ON***	***ON***		
SSC	***ON***			***ON***	***ON***

Manufacturer	Mazda Solenoid Identification And Location								
	1	2	3	4	5	6	7	8	9
Mazda "6" And Mazda "MPV"	Shift Solenoid "A"	Reduction Timing Solenoid	Shift Solenoid "B"	Shift Solenoid "C"	2/4 Brake Solenoid	Neutral Shift Solenoid	Line Pressure Solenoid	TCC Solenoid	High Clutch Solenoid

Copyright © 2008 ATSG

Figure 20

SOLENOID IDENTIFICATION (CONT'D)

ON/OFF Solenoids

On/Off Solenoids are as follows:
Shift Solenoids A, B, C, Neutral Shift Solenoid, and theReduction Timing Solenoid, as illustrated in Figure 21 and 22. These On/Off solenoids close the pressure circuit in response to current flow from the TCM. Each solenoid has an internal coil. Current passes through the coil and actuates the needle valve. The needle valve then opens and closes the fluid pressure circuit.

Duty Cycle Solenoids

Duty Cycle Solenoids are as follows:
Line Pressure Solenoid, TCC Solenoid, High Clutch Solenoid, and the 2-4 Brake Solenoid, as shown in Figure 23. The duty cycle solenoids repeatedly turn On/Off in 50Hz cycles. This opens and closes the fluid pressure circuit rapidly and meters fluid pressure in the circuit, dependant upon vehicle speed, throttle opening, engine load, and transaxle temperature, among other things.

Use the terminal identification and resistance charts on Page 11 for Mazda "6", and Page 12 for Mazda "MPV" to check the solenoids while still in the transaxle.

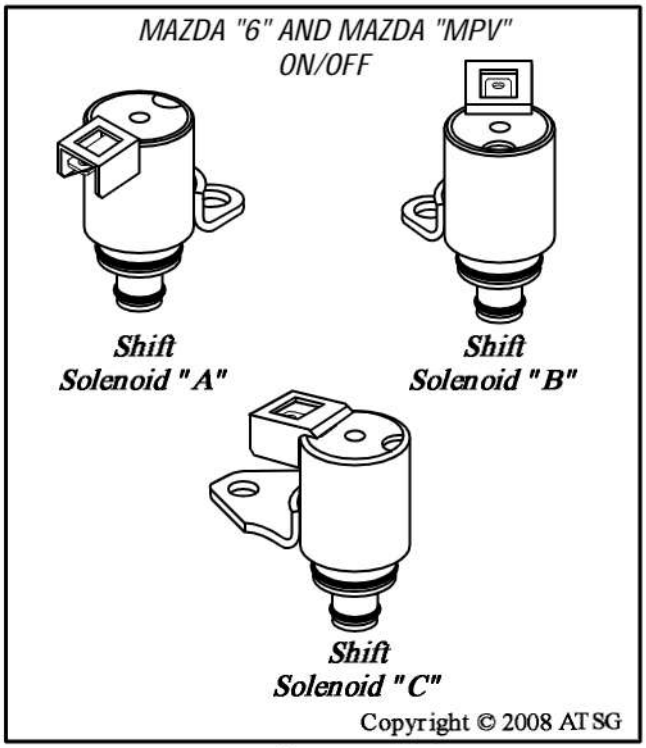

Figure 21

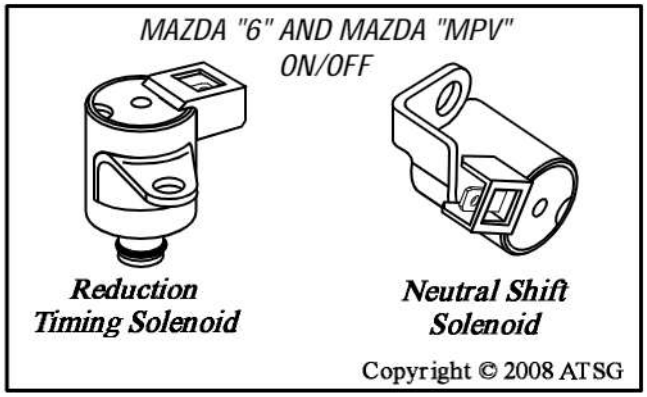

Figure 22

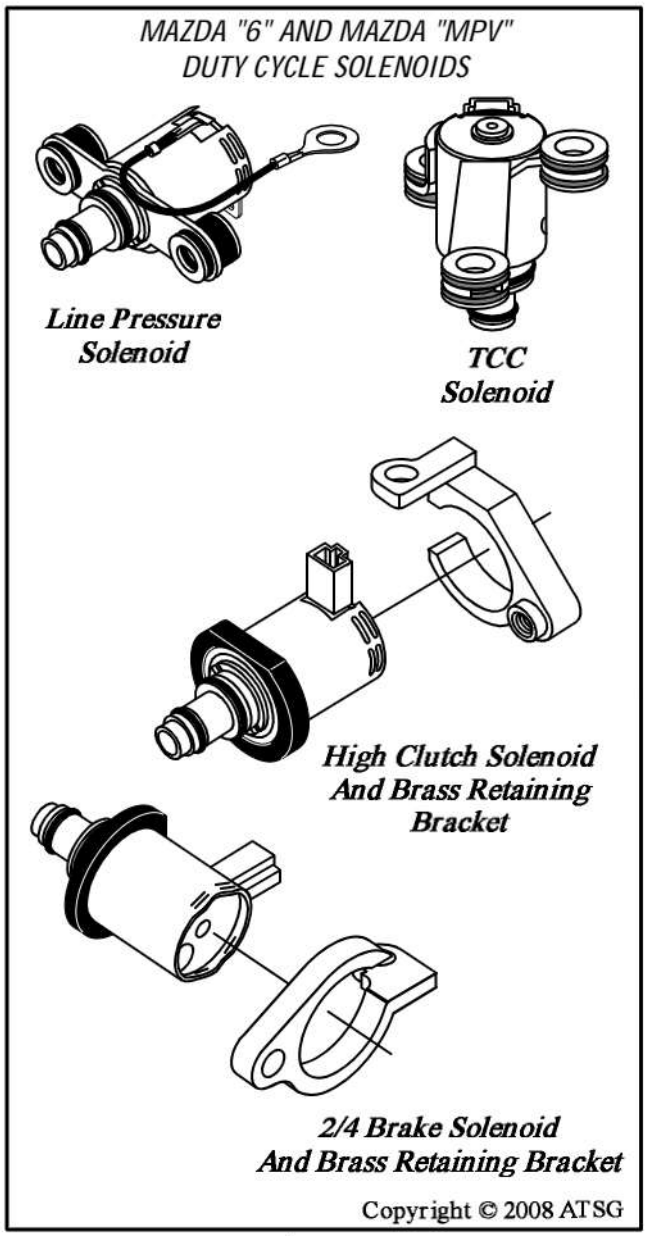

Figure 23

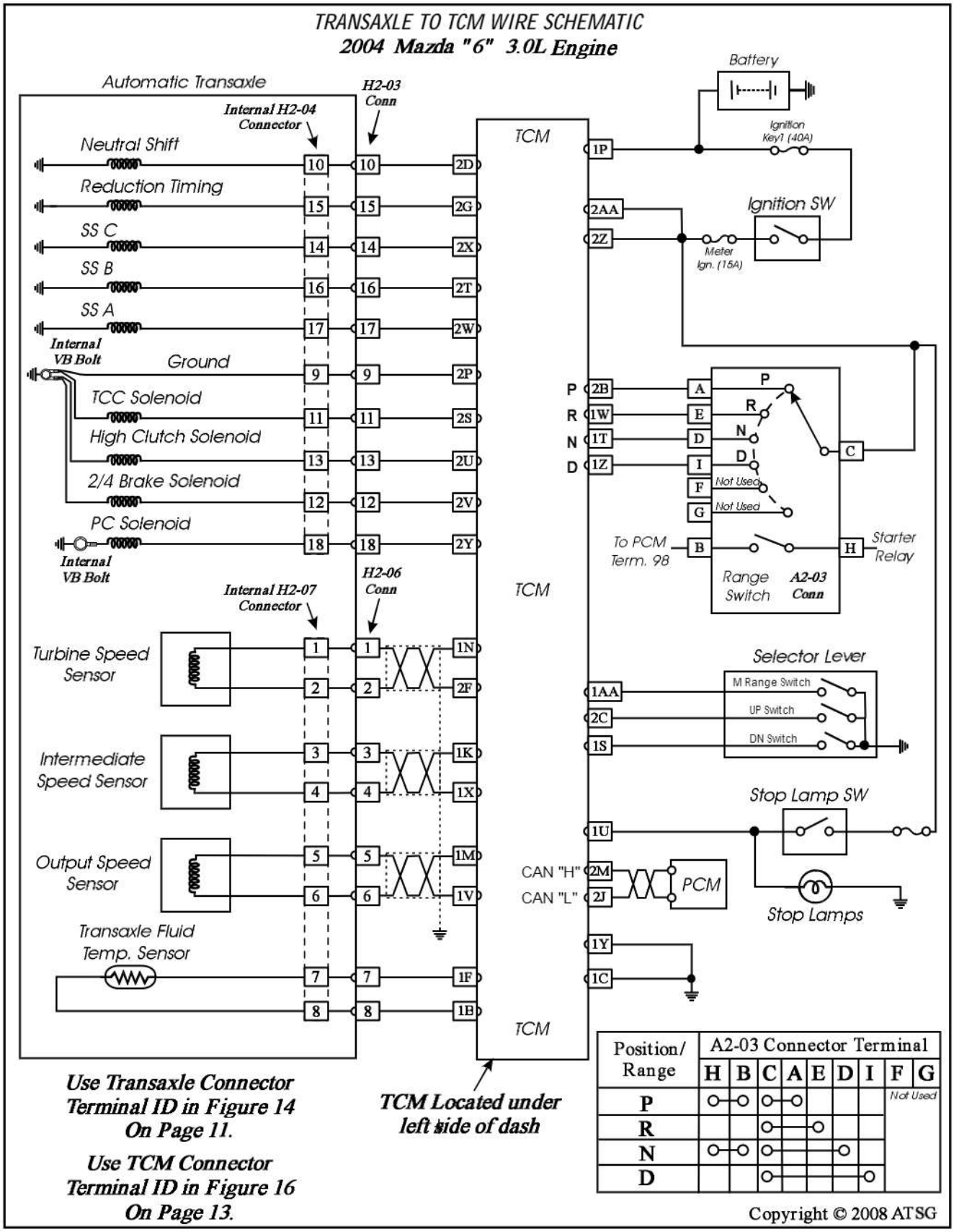
TRANSAXLE TO TCM WIRE SCHEMATIC
2004 Mazda "6" 3.0L Engine
Automatic Transaxle
Internal H2-04 Connector
H2-03 Conn
Neutral Shift
Reduction Timing
SS C
SS B
SS A
Internal VB Bolt
Ground
TCC Solenoid
High Clutch Solenoid
2/4 Brake Solenoid
PC Solenoid
Internal VB Bolt
Internal H2-07 Connector
H2-06 Conn
Turbine Speed Sensor
Intermediate Speed Sensor
Output Speed Sensor
Transaxle Fluid Temp. Sensor
TCM
Battery
Ignition Key1 (40A)
Ignition SW
Meter Ign. (15A)
Not Used
To PCM Term. 98
Range Switch
A2-03 Conn
Starter Relay
Selector Lever
M Range Switch
UP Switch
DN Switch
Stop Lamp SW
Stop Lamps
CAN "H"
CAN "L"
PCM
Use Transaxle Connector Terminal ID in Figure 14 On Page 11.
Use TCM Connector Terminal ID in Figure 16 On Page 13.
TCM Located under left side of dash
Position/ Range
A2-03 Connector Terminal
H B C A E D I F G
Not Used
P
R
N
D
Copyright © 2008 ATSG

Figure 24

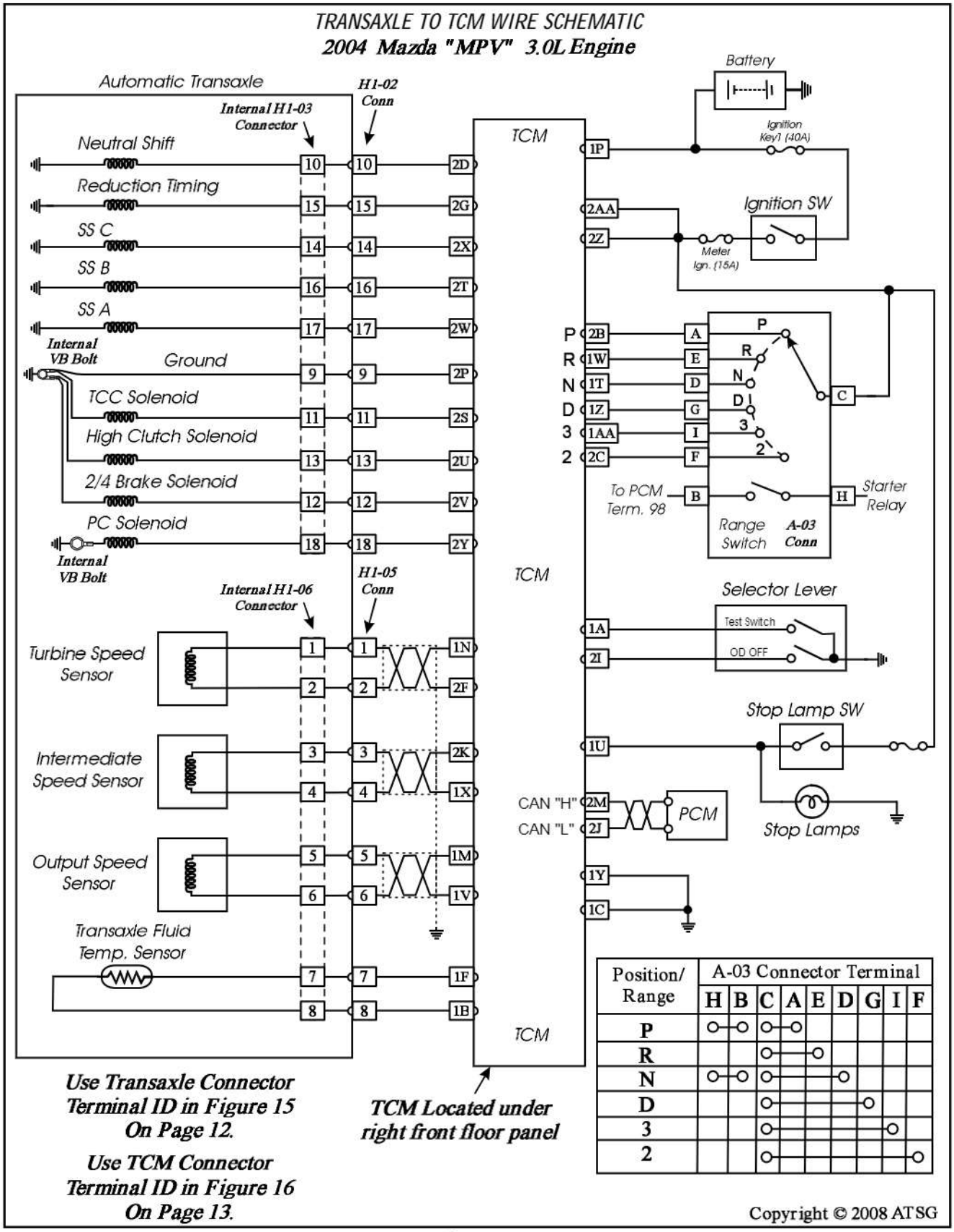
TRANSAXLE TO TCM WIRE SCHEMATIC
2004 Mazda "MPV" 3.0L Engine
Automatic Transaxle
Internal H1-03 Connector
H1-02 Conn
Neutral Shift
Reduction Timing
SS C
SS B
SS A
Internal VB Bolt
Ground
TCC Solenoid
High Clutch Solenoid
2/4 Brake Solenoid
PC Solenoid
Internal VB Bolt
Internal H1-06 Connector
H1-05 Conn
Turbine Speed Sensor
Intermediate Speed Sensor
Output Speed Sensor
Transaxle Fluid Temp. Sensor
TCM
TCM
TCM
Battery
Ignition Key1 (40A)
Ignition SW
Meter Ign. (15A)
To PCM Term. 98
Range Switch
A-03 Conn
Starter Relay
Selector Lever
Test Switch
OD OFF
Stop Lamp SW
Stop Lamps
CAN "H"
CAN "L"
PCM
Use Transaxle Connector Terminal ID in Figure 15 On Page 12.
Use TCM Connector Terminal ID in Figure 16 On Page 13.
TCM Located under right front floor panel
Position/ Range
A-03 Connector Terminal
H B C A E D G I F
P
R
N
D
3
2
Copyright © 2008 ATSG

Figure 25

MAZDA "6" DIAGNOSTIC TROUBLE CODES			
DTC	DESCRIPTION	MIL ON	AT WARNING LAMP
P0116	Engine Coolant Temperature (ECT) performance problem	Yes	No
P0117	Engine Coolant Temperature (ECT) circuit, low input	Yes	No
P0118	Engine Coolant Temperature (ECT) circuit, high input	Yes	No
P0121	Throttle Position (TP) stuck closed	Yes	No
P0122	Throttle Position (TP) circuit, low input	Yes	No
P0123	Throttle Position (TP) circuit, high input	Yes	No
P0705	Transaxle Range (TR) switch, circuit malfunction (Short to power)	Yes	Yes
P0706	Transaxle Range (TR) switch, circuit malfunction (Open or short circuit)	Yes	Yes
P0711	Transaxle Fluid Temperature (TFT) sensor malfunction (Stuck)	Yes	No
P0712	Transaxle Fluid Temperature (TFT) sensor malfunction (Short circuit)	Yes	Yes
P0713	Transaxle Fluid Temperature (TFT) sensor malfunction (Open circuit)	Yes	Yes
P0715	Turbine Shaft Speed (TSS) circuit malfunction	Yes	Yes
P0720	Output Shaft Speed Sensor (OSS) circuit malfunction	Yes	Yes
P0740	Torque Converter Clutch (TCC) system malfunction (Performance)	Yes	No
P0743	Torque Converter Clutch (TCC) solenoid malfunction (Electrical)	Yes	Yes
P0748	Pressure Control Solenoid, circuit malfunction	No	Yes
P0751	Shift Solenoid "A" malfunction (Stuck Off)	Yes	No
P0752	Shift Solenoid "A" malfunction (Stuck On)	Yes	No
P0753	Shift Solenoid "A" malfunction (Open or Short circuit)	Yes	Yes
P0756	Shift Solenoid "B" malfunction (Stuck Off)	Yes	No
P0757	Shift Solenoid "B" malfunction (Stuck On)	Yes	No
P0758	Shift Solenoid "B" malfunction (Open or Short circuit)	Yes	Yes
P0761	Shift Solenoid "C" malfunction (Stuck Off)	Yes	No
P0762	Shift Solenoid "C" malfunction (Stuck On)	Yes	No
P0763	Shift Solenoid "C" malfunction (Open or Short circuit)	Yes	Yes
P0768	Reduction Timing Solenoid circuit malfunction (Open or Short circuit)	No	Yes
P0773	Neutral Shift Solenoid circuit malfunction (Open or Short circuit)	No	Yes
P0778	2-4 Brake Solenoid circuit malfunction (Open or Short circuit)	No	Yes
P0791	Intermediate Speed Sensor (ISS) circuit malfunction (Open or Short circuit)	Yes	Yes
P0798	High Clutch Solenoid circuit malfunction (Open or Short circuit)	No	Yes
P1710	Ground Return circuit malfunction	No	No
U0073	CAN BUS OFF	Yes	Yes
U0100	TCM cannot recieve signals from PCM	Yes	Yes

Copyright © 2008 ATSG

Figure 26

MAZDA "MPV" DIAGNOSTIC TROUBLE CODES			
DTC	DESCRIPTION	MIL ON	OD/OFF FLASHING
P0116	Engine Coolant Temperature (ECT) performance problem	Yes	No
P0117	Engine Coolant Temperature (ECT) circuit, low input	Yes	No
P0118	Engine Coolant Temperature (ECT) circuit, high input	Yes	No
P0121	Throttle Position (TP) stuck closed	Yes	No
P0122	Throttle Position (TP) circuit, low input	Yes	No
P0123	Throttle Position (TP) circuit, high input	Yes	No
P0705	Transaxle Range (TR) switch, circuit malfunction (Short to power)	Yes	Yes
P0706	Transaxle Range (TR) switch, circuit malfunction (Open or short circuit)	Yes	Yes
P0711	Transaxle Fluid Temperature (TFT) sensor malfunction (Stuck)	Yes	No
P0712	Transaxle Fluid Temperature (TFT) sensor malfunction (Short circuit)	Yes	Yes
P0713	Transaxle Fluid Temperature (TFT) sensor malfunction (Open circuit)	Yes	Yes
P0715	Turbine Shaft Speed (TSS) circuit malfunction	Yes	Yes
P0720	Output Shaft Speed Sensor (OSS) circuit malfunction	Yes	Yes
P0740	Torque Converter Clutch (TCC) system malfunction (Performance)	Yes	No
P0743	Torque Converter Clutch (TCC) solenoid malfunction (Electrical)	Yes	Yes
P0748	Pressure Control Solenoid, circuit malfunction	No	Yes
P0751	Shift Solenoid "A" malfunction (Stuck Off)	Yes	No
P0752	Shift Solenoid "A" malfunction (Stuck On)	Yes	No
P0753	Shift Solenoid "A" malfunction (Open or Short circuit)	Yes	Yes
P0756	Shift Solenoid "B" malfunction (Stuck Off)	Yes	No
P0757	Shift Solenoid "B" malfunction (Stuck On)	Yes	No
P0758	Shift Solenoid "B" malfunction (Open or Short circuit)	Yes	Yes
P0761	Shift Solenoid "C" malfunction (Stuck Off)	Yes	No
P0762	Shift Solenoid "C" malfunction (Stuck On)	Yes	No
P0763	Shift Solenoid "C" malfunction (Open or Short circuit)	Yes	Yes
P0768	Reduction Timing Solenoid circuit malfunction (Open or Short circuit)	No	Yes
P0773	Neutral Shift Solenoid circuit malfunction (Open or Short circuit)	No	Yes
P0778	2-4 Brake Solenoid circuit malfunction (Open or Short circuit)	No	Yes
P0791	Intermediate Speed Sensor (ISS) circuit malfunction (Open or Short circuit)	Yes	Yes
P0798	High Clutch Solenoid circuit malfunction (Open or Short circuit)	No	Yes
P1710	Ground Return circuit malfunction	No	No
U0073	CAN BUS OFF	Yes	Yes
U0100	TCM cannot recieve signals from PCM	Yes	Yes

Figure 27

JF506E PLANETARY, DIFFERENTIAL, TRANSFER GEAR RATIO CHART

	Maxda 6 3.0L V6	Maxda MPV 3.0L V6	Land Rover Freelander 2.5L V6	Land Rover Freelander Turb Diesel	Jaguar X Type 2.0L/2.5L/3.0L	VW Golf 1.9L Diesel	VW Jetta 1.8L/2.8L	VW GTI 1.8L
1st Gear	3.801	3.801	3.474	3.801	3.801	3.801	3.801	3.801
2nd Gear	2.131	2.131	1.948	2.131	2.131	2.131	2.131	2.131
3rd Gear	1.364	1.364	1.247	1.364	1.364	1.364	1.364	1.364
4th Gear	0.935	0.935	0.854	0.935	0.935	0.935	0.935	0.935
5th Gear	0.685	0.685	0.685	0.685	0.685	0.685	0.685	0.685
Reverse	2.970	2.970	2.714	2.970	2.970	2.970	2.970	2.970
Differential Ratio	3.23	3.04	3.04	2.87 (2.42) Codes Unknown	3.23	Transaxle Code "EEB" = 3.45 Transaxle Code "EYN" = 3.45 Transaxle Code "EEF" = 2.82		
Transfer Gear "A"	41 Teeth 2 Ring ID	41 Teeth 2 Ring ID	54 Teeth 0 Ring ID	54 Teeth (58 Teeth)	54 Teeth 0 Ring ID	52 Teeth 0 Ring ID	52 Teeth 0 Ring ID	52 Teeth 0 Ring ID
Transfer Gear "B"	47 Teeth 1 Ring ID	47 Teeth 1 Ring ID	65 Teeth 0 Ring ID	65 Teeth (65 Teeth)	65 Teeth 0 Ring ID	67 Teeth 0 Ring ID	67 Teeth 0 Ring ID	67 Teeth 0 Ring ID
Differential Pinion Gear	21 Teeth 3 Ring ID	22 Teeth 2 Ring ID	22 Teeth 2 Ring ID	23 Teeth (26 Teeth)	21 Teeth 3 Ring ID	20 Teeth 3 Ring ID	20 Teeth 3 Ring ID	23 Teeth 3 Ring ID
Differential Ring Gear	68 Teeth 3 Ring ID	67 Teeth 2 Ring ID	67 Teeth 2 Ring ID	66 Teeth (63 Teeth)	68 Teeth 3 Ring ID	69 Teeth 3 Ring ID	69 Teeth 3 Ring ID	65 Teeth 3 Ring ID

Special Note: The above tooth counts were "Observed" counts, from units that were seen during teardown. Notice also that the rings that are normally used for identification, are the same count on many of the ring gears. Use "ONLY" the tooth count for positive identification, and in the case of Transfer Gear "A", you must also measure the inside diameter of the gear, to determine if it is used for 2 ring input shaft or 3 ring input shaft.

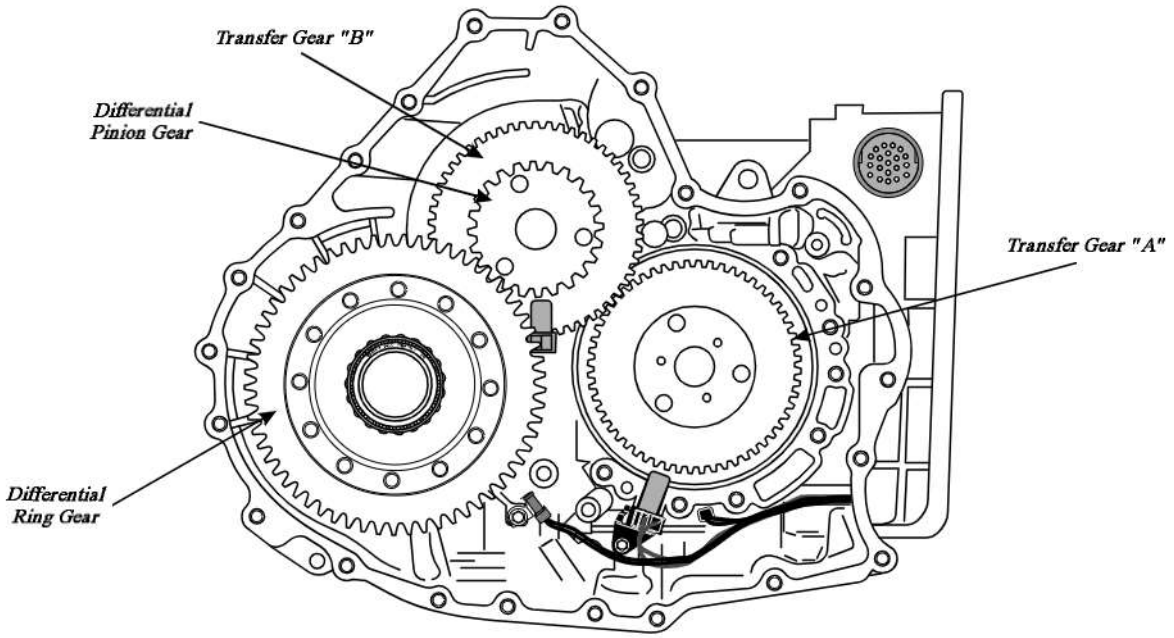

Copyright © 2008 ATSG

Figure 28

SPROCKET RATIO IDENTIFICATION

Figure 28 is a chart for the identification of the two transfer gears in this unit and the differences in the various units, as they will not interchange.

CASE PASSAGE IDENTIFICATION

Figure 29 identifies the case passages under the valve body for possible air checks, or for removing a particular component. Also shown are the location of the two seals between the valve body and the case.

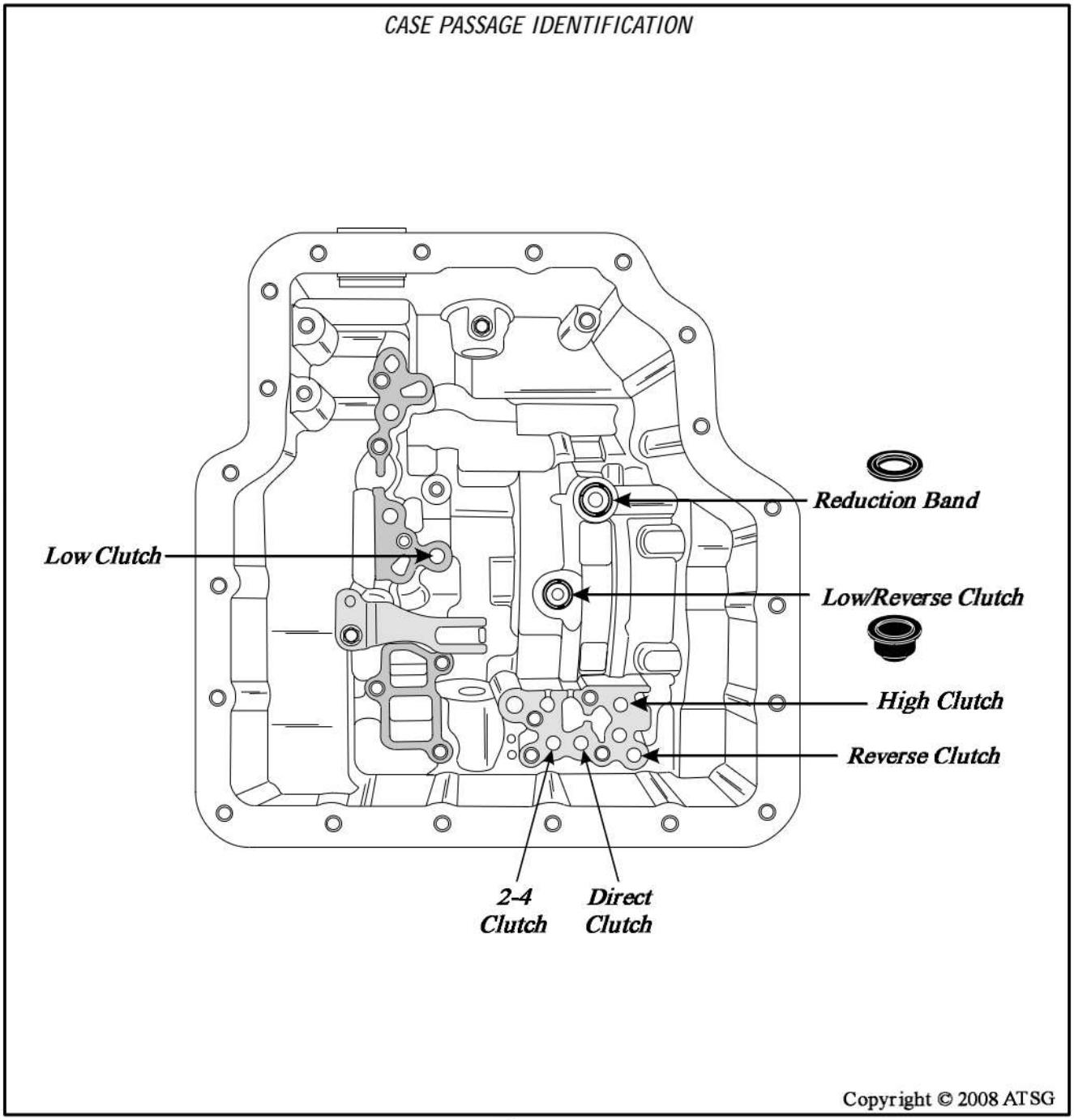

Figure 29

LINE PRESSURE TEST

Special Note:

Line pressure cannot be measured on the JF506E transaxle. Use the "Low Clutch" tap when testing in "D", "4", "3", and "2" range positions. Use the "Reverse Clutch" tap when testing in the "R" range position. Pressure specifications shown below.

MAZDA LOW PRESSURE TAP LOCATION

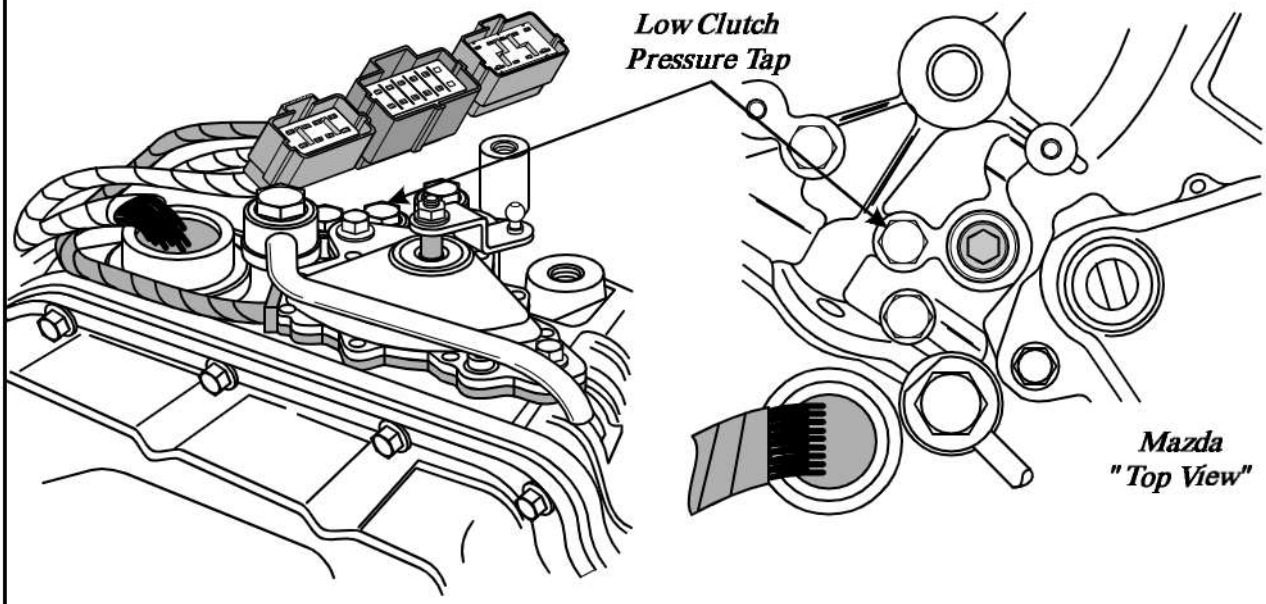

	RANGE	PRESSURE TAP	IDLE	STALL
MAZDA "6"	"D",	Low Clutch	42-71 psi	186-215 psi
	"R",	Reverse Clutch	80-109 psi	225-254 psi

	RANGE	PRESSURE TAP	IDLE	STALL
MAZDA "MPV"	"D", "3",	Low Clutch	42-71 psi	186-215 psi
	"2",	Low Clutch	80-109 psi	225-254 psi
	"R",	Reverse Clutch	80-109 psi	225-254 psi

Copyright © 2008 ATSG

Figure 30

LINE PRESSURE TEST

Special Note:

Line pressure cannot be measured on the JF506E transaxle. Use the "Low Clutch" tap when testing in "D", "4", "3", and "2" range positions. Use the "Reverse Clutch" tap when testing in the "R" range position. Pressure specifications shown below.

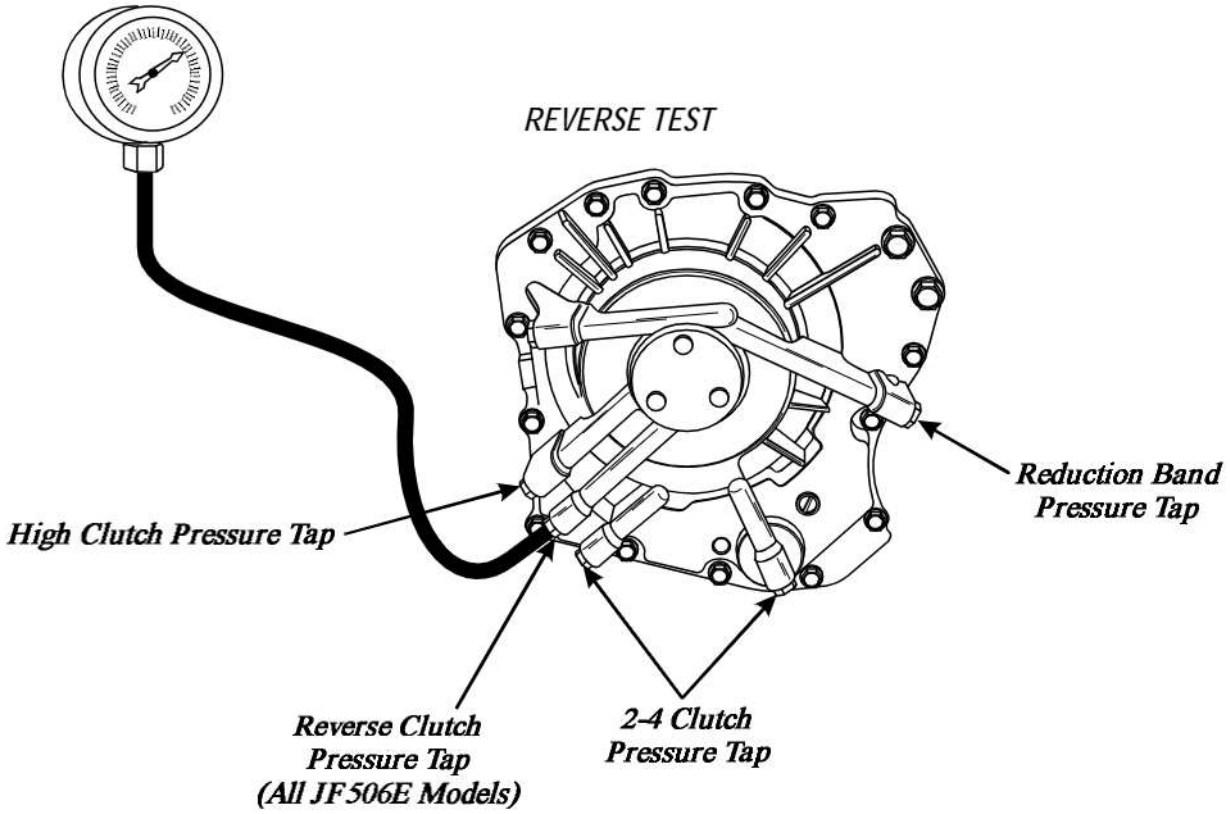

	RANGE	PRESSURE TAP	IDLE	STALL
MAZDA "6"	"D",	Low Clutch	42-71 psi	186-215 psi
	"R",	Reverse Clutch	80-109 psi	225-254 psi

	RANGE	PRESSURE TAP	IDLE	STALL
MAZDA "MPV"	"D", "3",	Low Clutch	42-71 psi	186-215 psi
	"2",	Low Clutch	80-109 psi	225-254 psi
	"R",	Reverse Clutch	80-109 psi	225-254 psi

Copyright © 2008 ATSG

Figure 31

SAFETY PRECAUTIONS

Service information provided in this manual by ATSG is intended for use by professional, qualified technicians. Attempting repairs or service without the appropriate training, tools and equipment could cause injury to you or others.

The service procedures we recommend and describe in this manual are effective methods of performing service and repair on this unit. Some of the procedures require the use of special tools that are designed for specific purposes.

This manual contains CAUTIONS that you must observe carefully in order to reduce the risk of injury to yourself or others. This manual also contains NOTES that must be carefully followed in order to avoid improper service that may damage the vehicle, tools and/or equipment.

TRANSAXLE DISASSEMBLY

1. The transaxle should be steam cleaned on the outside, to remove any dirt and grease before disassembly begins.
2. This transaxle can be disassembled very easily on a work bench without the benefit of holding fixture for rotation.
3. Remove the torque converter from transaxle, as shown in Figure 32.
   Caution: Use care when removing the torque converter, to avoid personal injury and/or damage to converter, as it is heavy.
4. Remove the retaining bolt, dipstick and tube, as shown in Figure 32, discard "O" ring seal.

Continued on Page 27

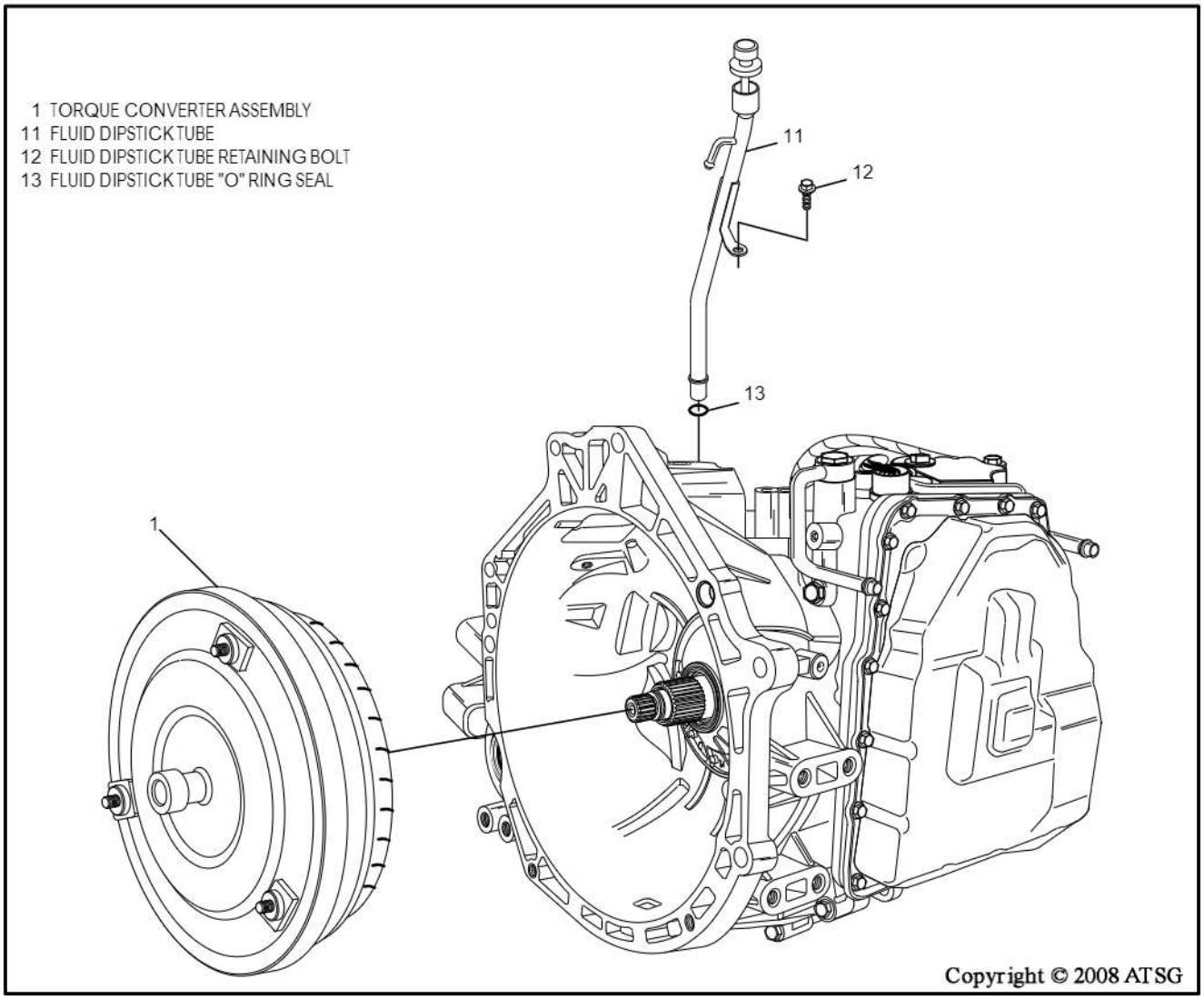

Figure 32

TRANSAXLE DISASSEMBLY (CONT'D)

5. Remove both cooler line banjo fitting bolts and cooler lines, as shown in Figure 33.
6. Remove the external manual shift lever nut, washer and lever, as shown in Figure 33.
7. Remove the two transaxle range sensor bolts, as shown in Figure 34, and remove transaxle range sensor.

Continued on Page 28

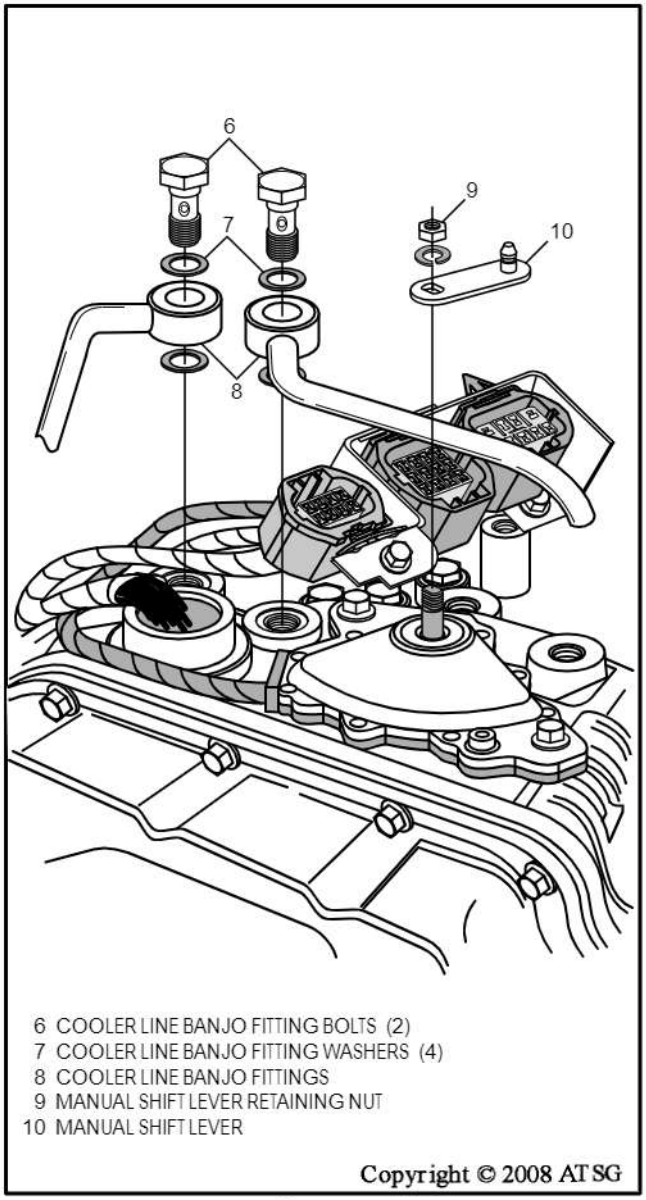

Figure 33

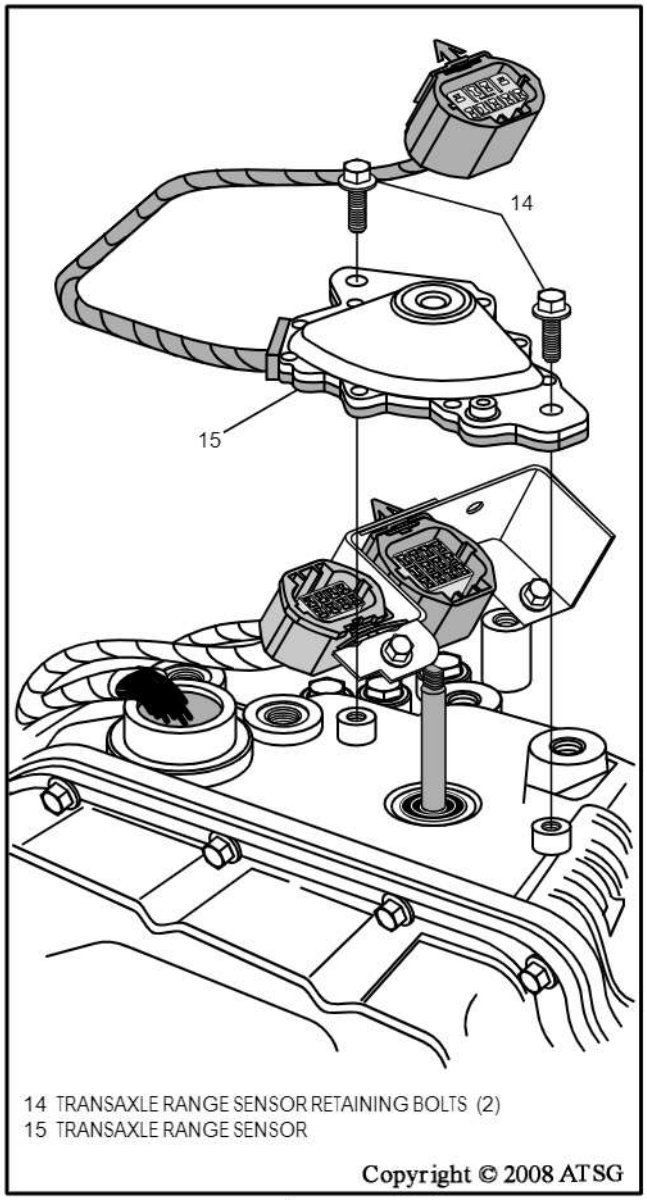

Figure 34

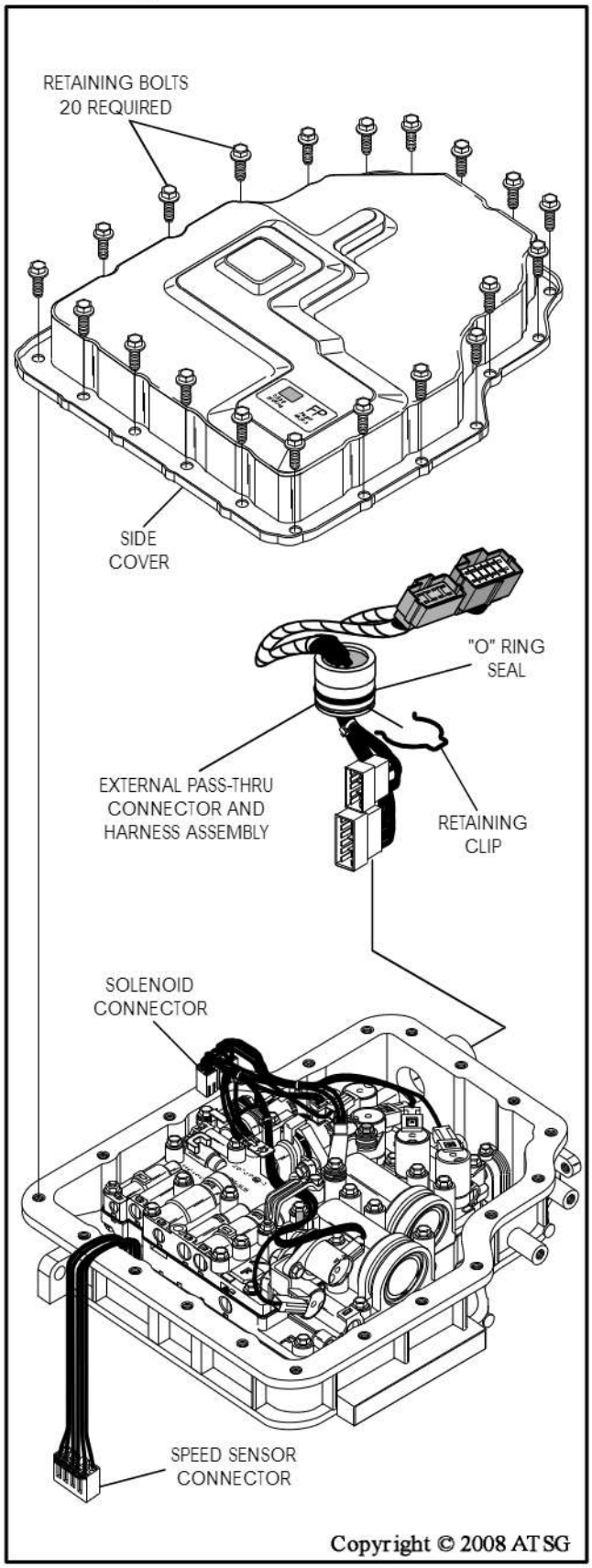

Figure 35

TRANSAXLE DISASSEMBLY (CONT'D)

8. Remove the twenty side cover retaining bolts, as shown in Figure 35, and remove side cover.
9. Disconnect both inside connectors and lay the speed sensor connector wires over the pan rail, as shown in Figure 35.
10. Remove the retaining clip from the external "pass-thru" connector and harness assembly, as shown in Figure 35.
11. Remove the external harness and connector assembly by maneuvering through the hole in case, as shown in Figure 35.
12. Remove and discard the "O" ring seal on the pass-thru connector.

Continued on Page 29

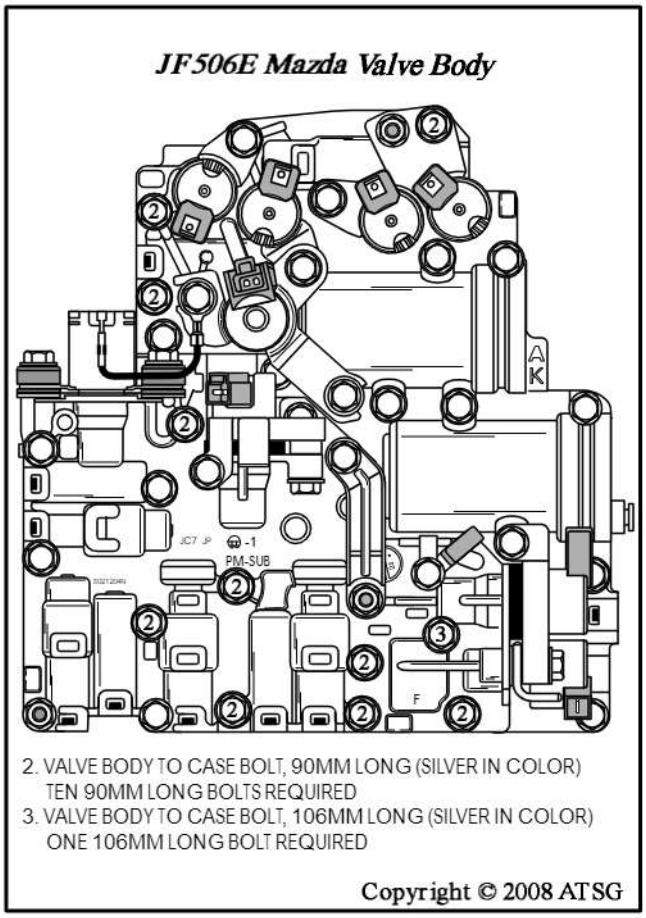

Figure 36

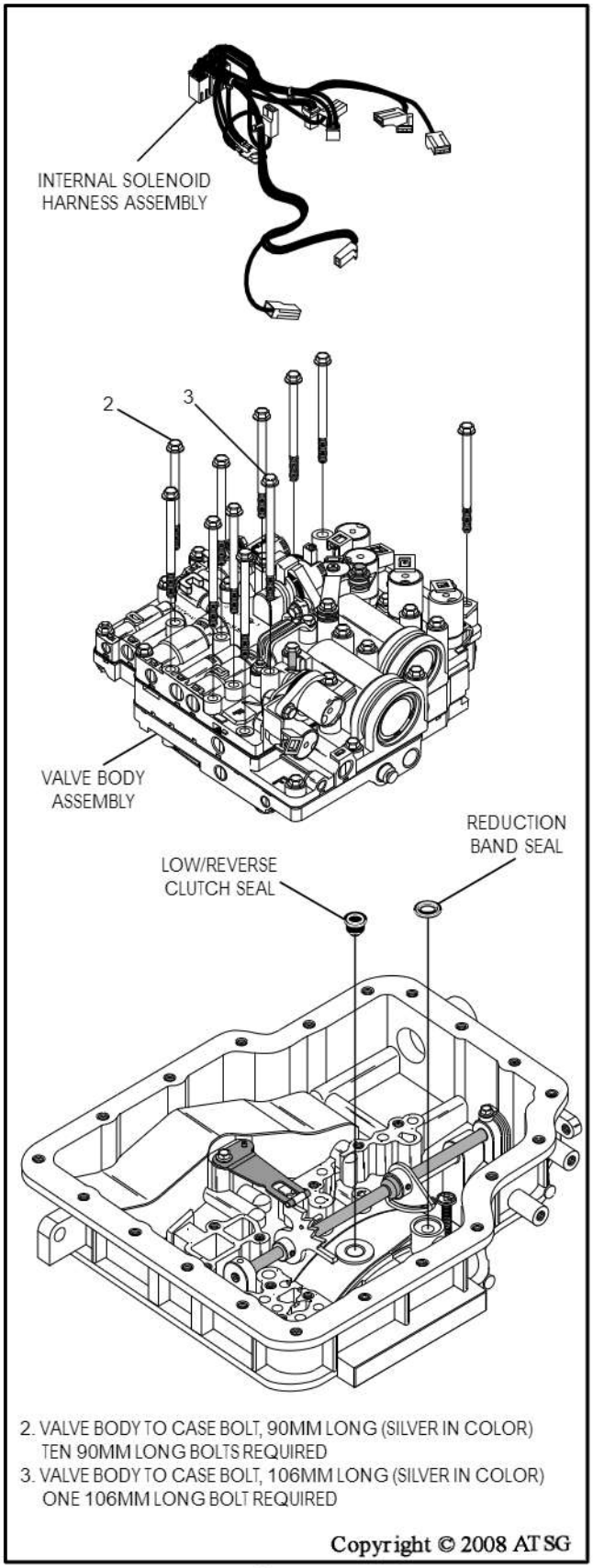

Figure 37

TRANSAXLE DISASSEMBLY (CONT'D)

13. Disconnect each of the connectors from their respective solenoids.
14. Remove the bolt from terminal holding the ground wires, and remove the internal solenoid harness assembly, as shown in Figure 37.
15. Remove the eleven, silver in color, valve body to case retaining bolts.
    Note: Their locations are identified for you in Figure 36, with the number "2" or "3" on the bolt head. Notice that one is longer than the others and all are silver in color.
16. Remove the valve body assembly by lifting straight up, as shown in Figure 37.
17. Set the valve body aside for the component rebuild section.
18. Remove and discard the low/reverse clutch "top-hat" seal and the reduction band seal, as shown in Figure 37.
19. Remove the 22 converter housing to case bolts, and their locations are shown in Figure 38.

Continued on Page 30

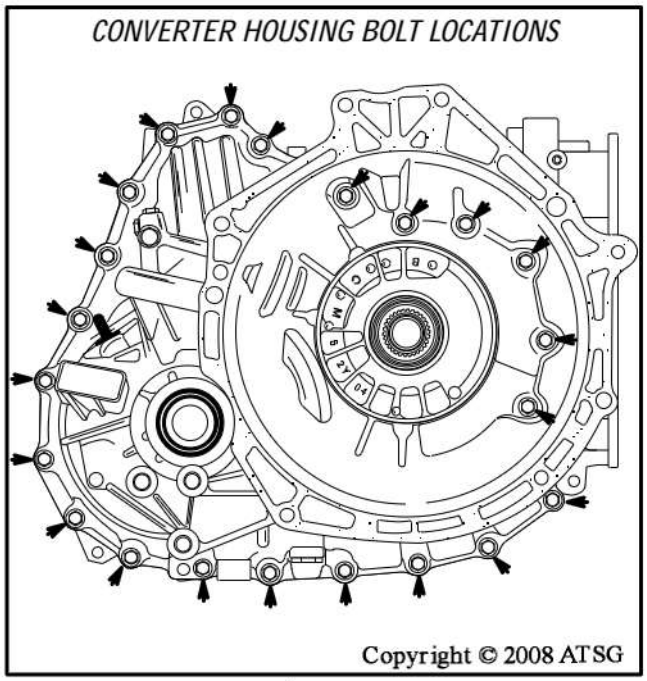

Figure 38

TRANSAXLE DISASSEMBLY (CONT'D)

20. After the bolts are removed, tap on converter housing with a rubber mallet to loosen and remove converter housing from the case, as shown in Figure 39.
21. Set the converter housing aside for component rebuild section.
22. Remove the final drive assembly by lifting straight up, as shown in Figure 40.
23. Set final drive assembly aside for component rebuild section.
24. Remove the two fluid filter retaining bolts, as shown in Figure 41, remove and discard the fluid filter assembly.

Continued on Page 31

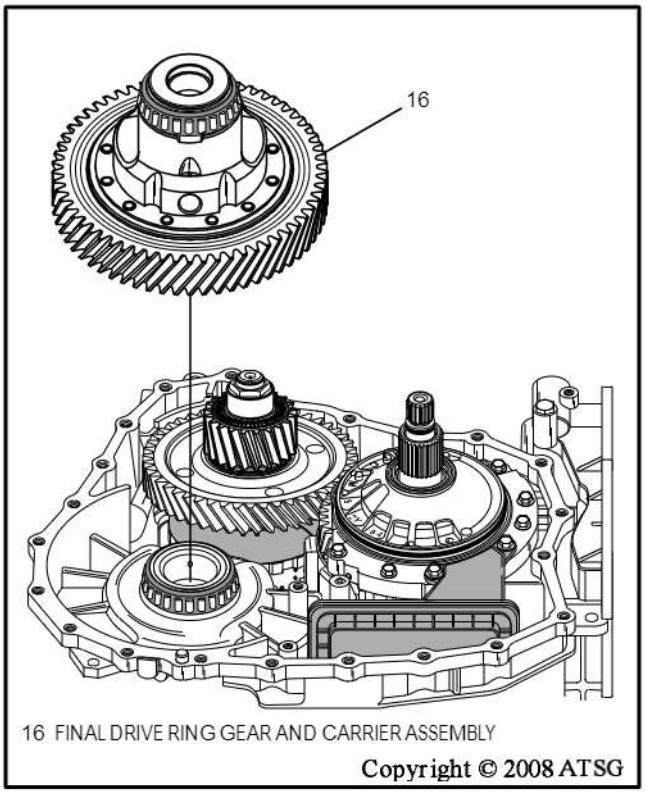

Figure 40

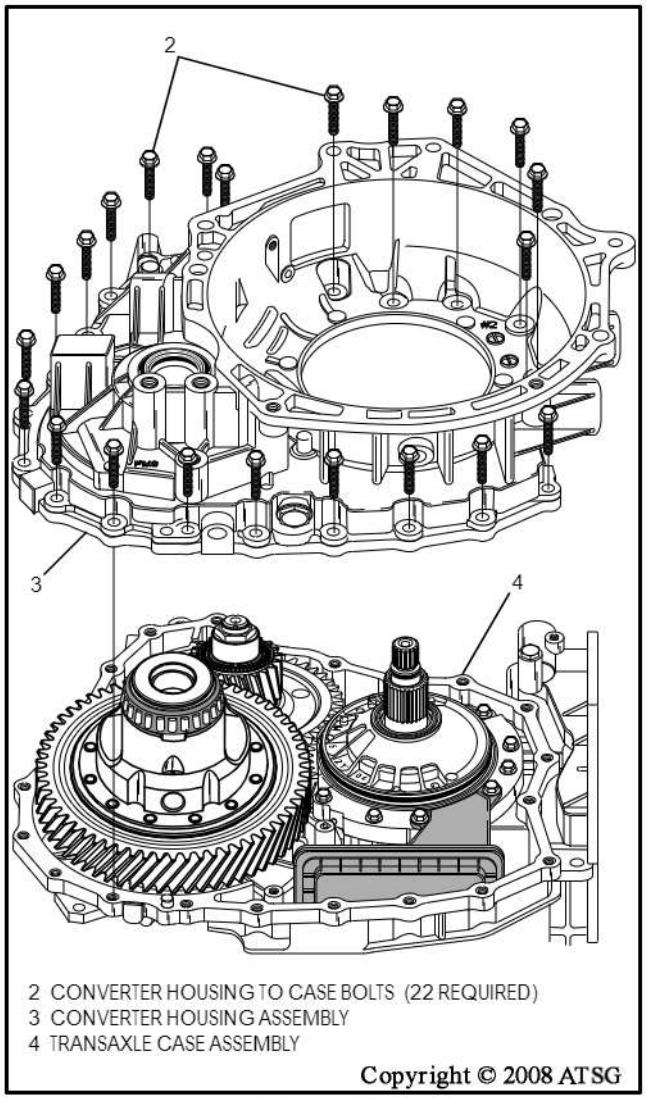

Figure 39

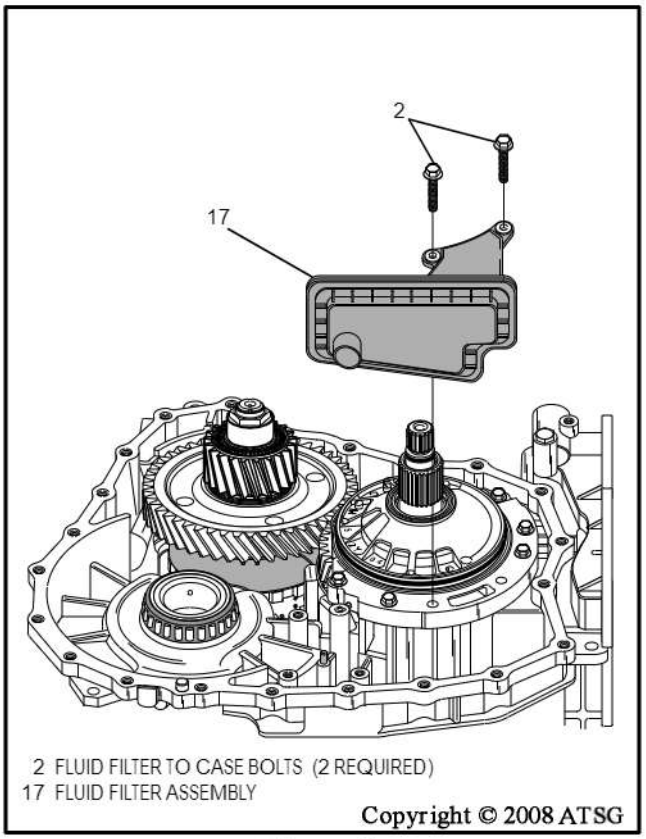

Figure 41

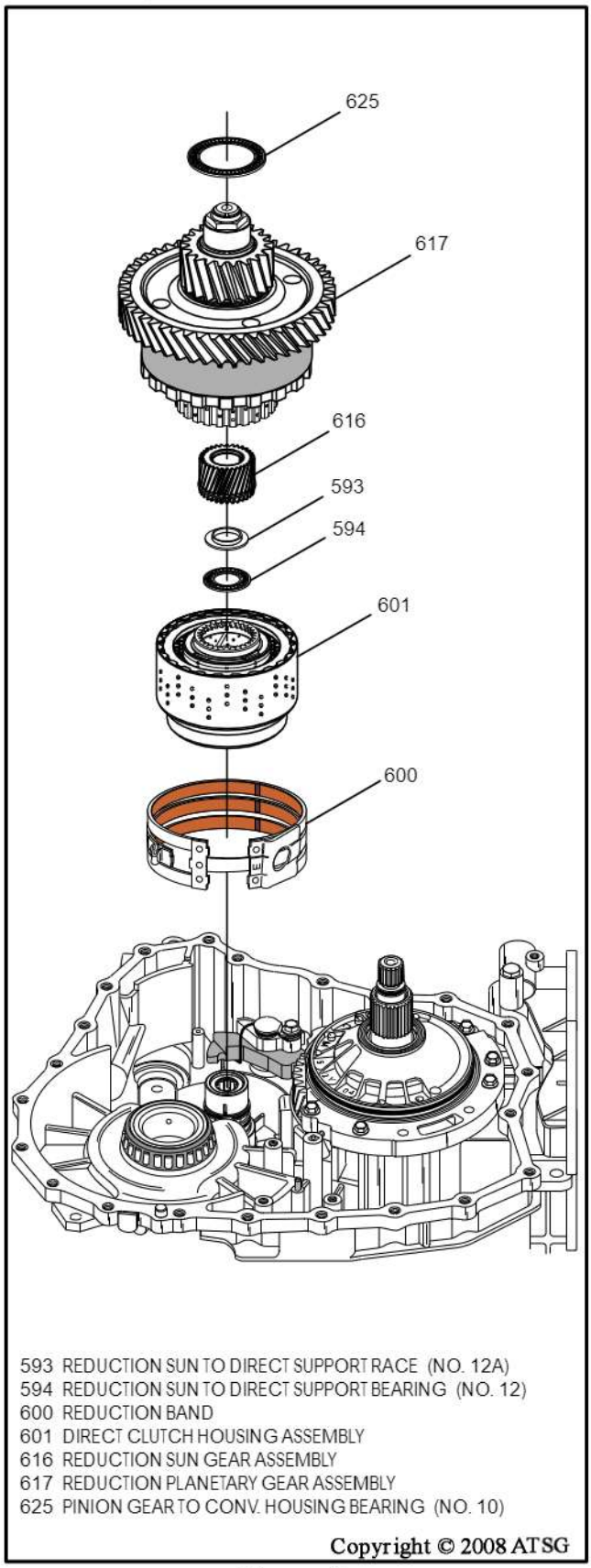

Figure 42

TRANSAXLE DISASSEMBLY (CONT'D)

25. Remove the number 10 thrust bearing from the pinion gear on the reduction carrier assembly, as shown in Figure 42.
26. Remove the reduction carrier assembly from case by lifting up with slight twisting motion, as shown in Figure 42.
27. Set the reduction carrier assembly aside for the component rebuild section.
28. Remove the reduction sun gear from direct clutch housing, as shown in Figure 42.
29. Remove the number 12 thrust bearing and the 12A thrust bearing race (See Figure 42).
30. Remove the direct clutch housing from case, as shown in Figure 42.
31. Set direct clutch housing aside for component rebuild section.
32. Remove the reduction band assembly from the case, as shown in Figure 42.
33. Remove the "O" ring seal from turbine shaft, as shown in Figure 43.

Continued on Page 32

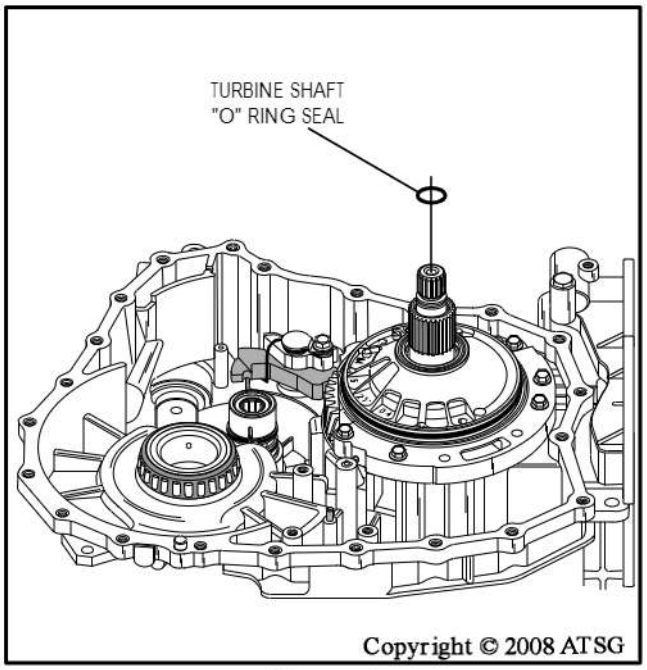

Figure 43

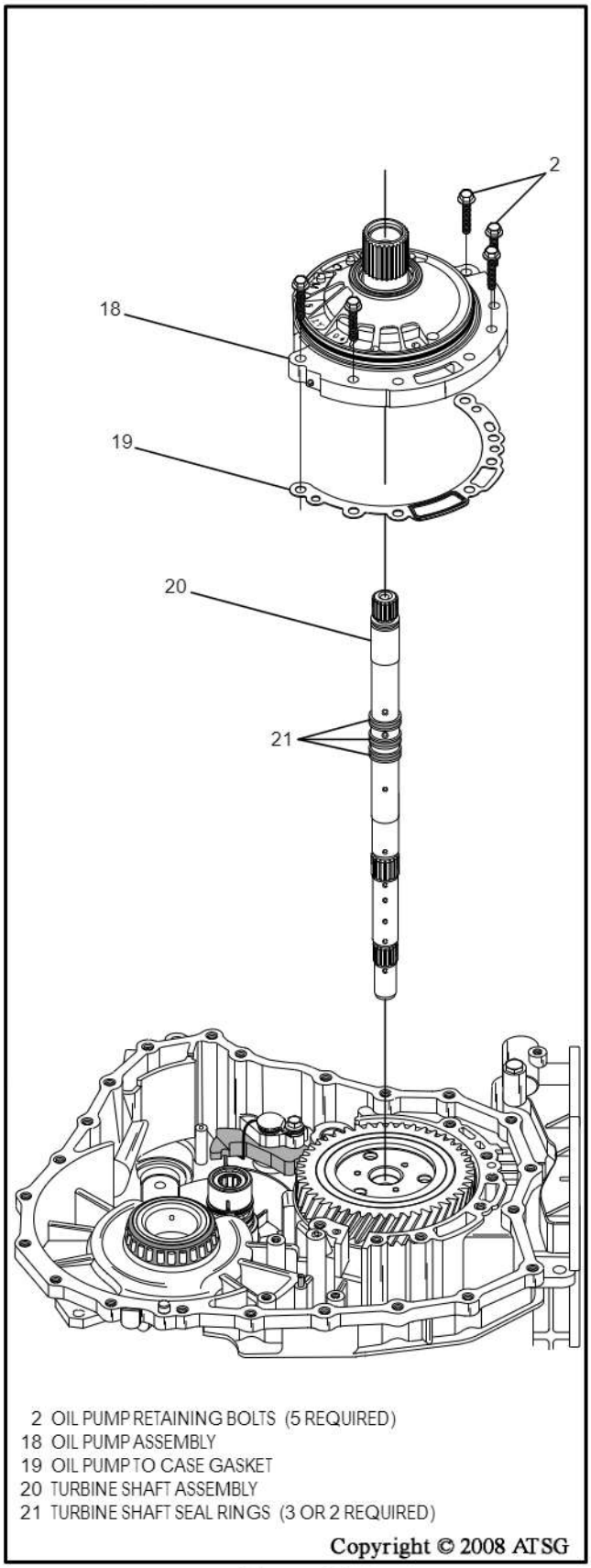

Figure 44

TRANSAXLE DISASSEMBLY (CONT'D)

34. Remove the remaining five oil pump retaining bolts, as shown in Figure 44.
35. Remove the oil pump assembly by lifting straight up, as shown in Figure 44.
36. Remove and discard the oil pump to case gasket, as shown in Figure 44.
37. Remove the turbine shaft by lifting straight up, as shown in Figure 44.
    Note: The turbine shaft may come out when the oil pump is removed.
38. Set the oil pump and turbine shaft aside for the component rebuild section.
39. Remove the snap ring holding the reduction servo cover in place, as shown in Figure 45.
40. Remove the reduction servo cover assembly, as shown in Figure 45.

Continued on Page 33

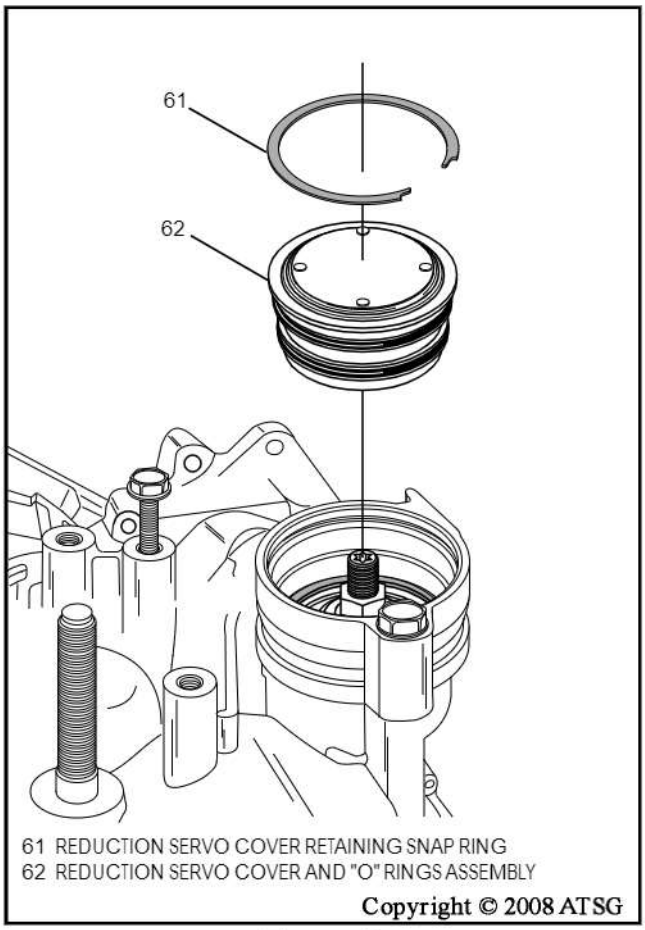

Figure 45

TRANSAXLE DISASSEMBLY (CONT'D)

41. Compress the reduction servo piston using a 14mm deep socket and a large screwdriver, as shown in Figure 47, and remove the snap ring, as shown in Figure 48.
Note: Reduction Servo cut-away provided for you in Figure 46.

42. Remove the reduction servo spacer, the apply piston and return spring, as shown in Figure 48.
Note: Tag return spring for identification as it is similar to accummulator springs.

43. Set all reduction servo parts aside for the component rebuild section.

Continued on Page 34

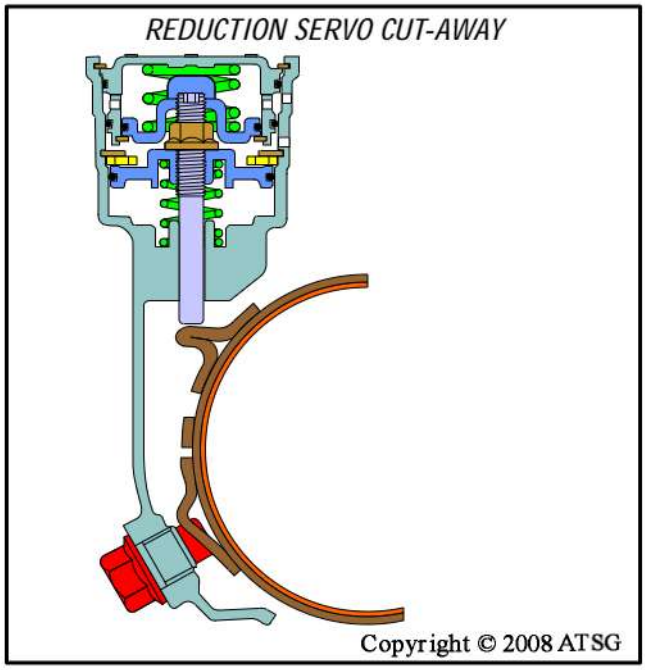

Figure 46

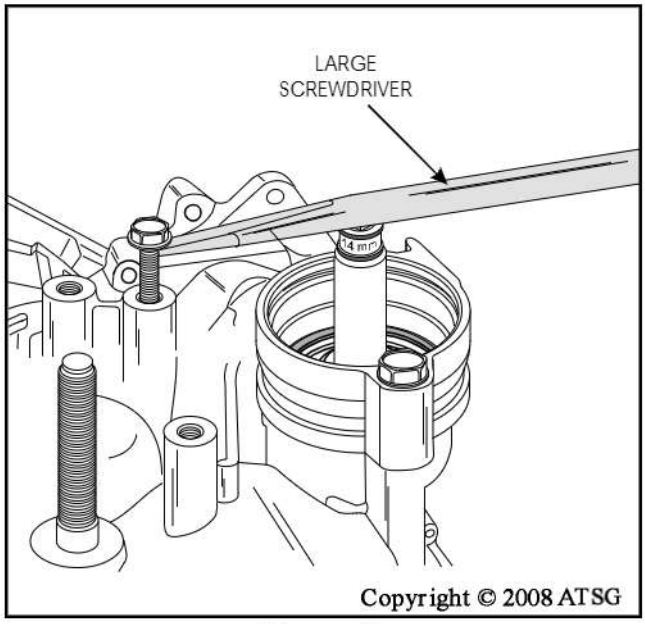

Figure 47

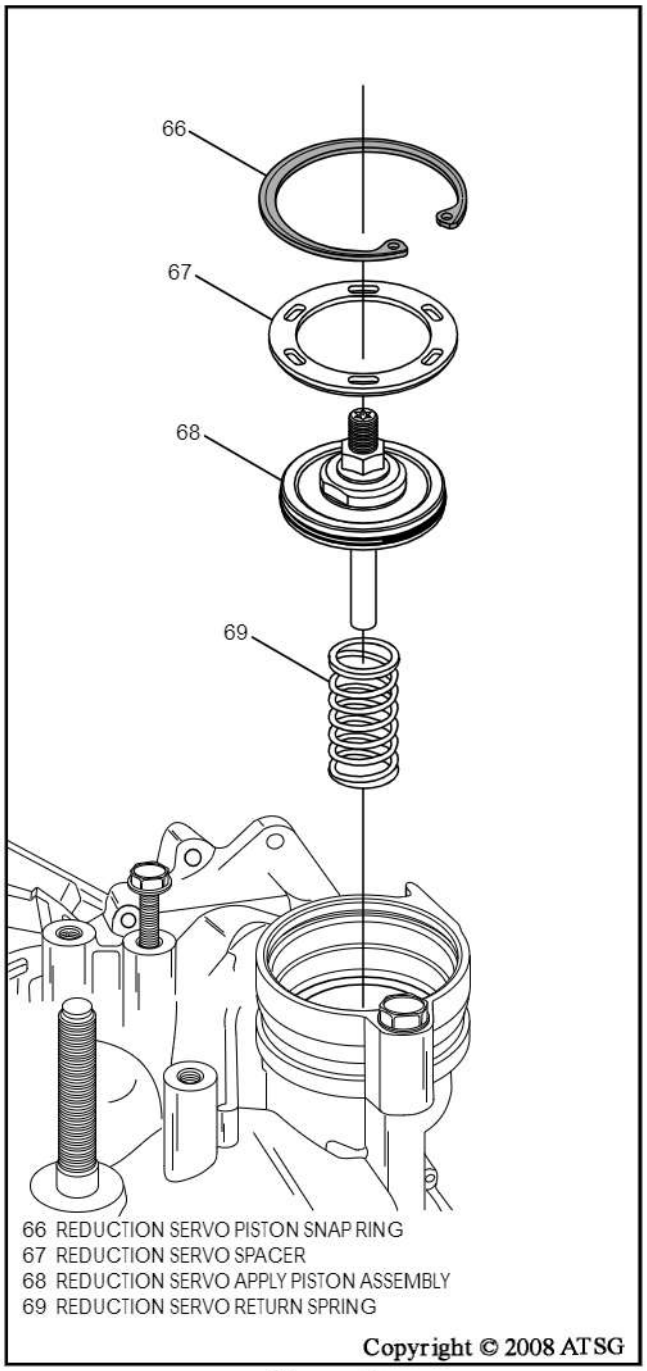

Figure 48

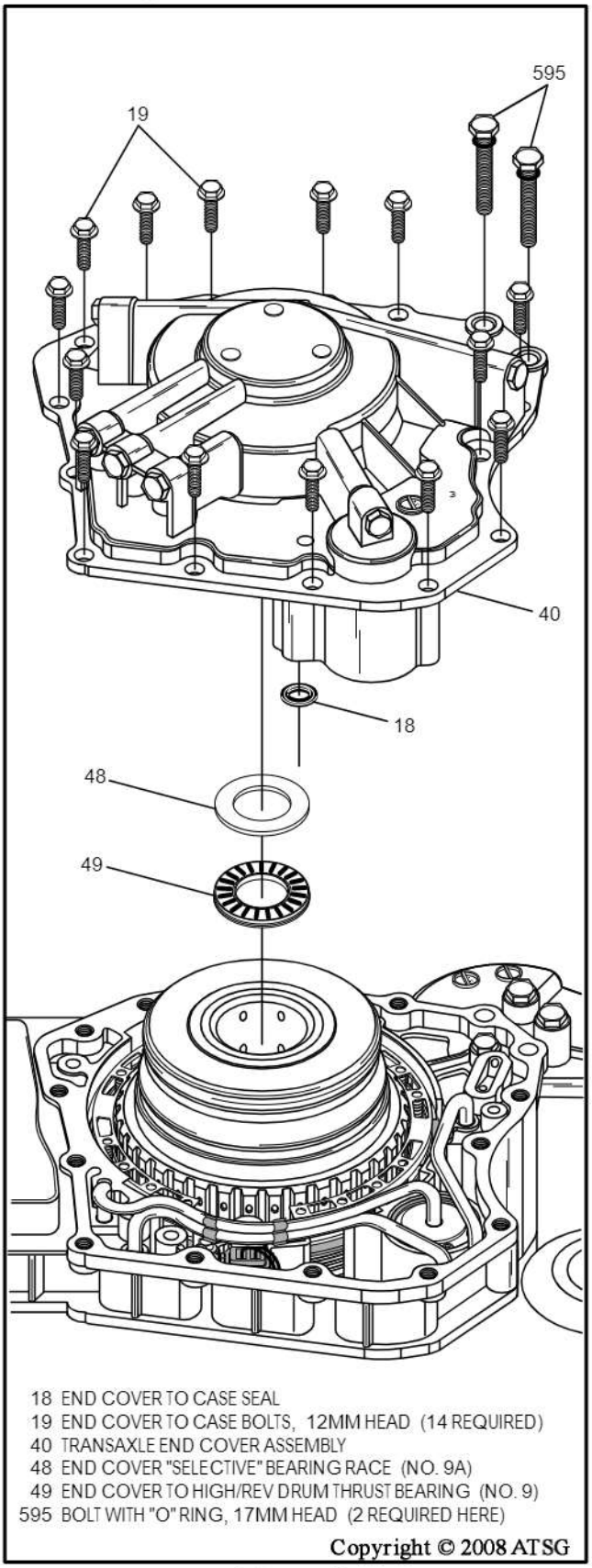

Figure 49

TRANSAXLE DISASSEMBLY (CONT'D)

44. Remove the two 17mm head bolts (595), with the "O" rings, from the end cover, as shown in Figure 49.
    Note: These two bolts are also used to hold the direct clutch support in the case.
45. Remove and discard the two "O" rings.
46. Remove the 14 remaining 12mm head bolts retaining the end cover, as shown in Figure 49.
47. Remove the end cover by tapping gently with a plastic mallet to loosen, and set the end cover aside for component rebuild.
48. Remove and discard the end cover to case seal, as shown in Figure 49.
49. Remove the number 9 thrust bearing and the 9A "selective" thrust bearing race, as shown in Figure 49.
    Note: "Selective" bearing race may be stuck to end cover.
50. Remove the 3 fluid feed pipes using a large screwdriver (See Figure 50). Notice that two of the pipes are clipped together.

Continued on Page 35

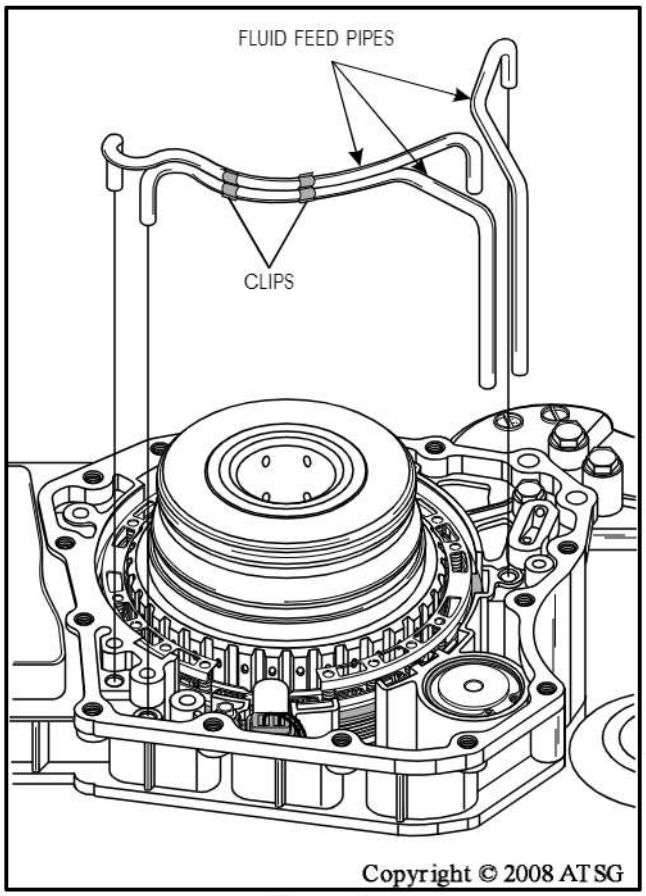

Figure 50

TRANSAXLE DISASSEMBLY (CONT'D)

51. Disconnect the turbine shaft speed sensor and lay the connector to the side (See Figure 51).
52. Remove the two retaining bolts from the clip and remove the turbine shaft speed sensor, as shown in Figure 51.
53. Remove 2-4 brake clutch piston return spring assembly, as shown in Figure 52.
54. Remove the high and reverse clutch housing assembly, as shown in Figure 52.
55. Remove the number 8 thrust bearing, as shown in Figure 52.
    Note: Thrust bearing may be stuck in the high and reverse clutch housing.
56. Set the high and reverse clutch housing aside for the component rebuild section.

Continued on Page 36

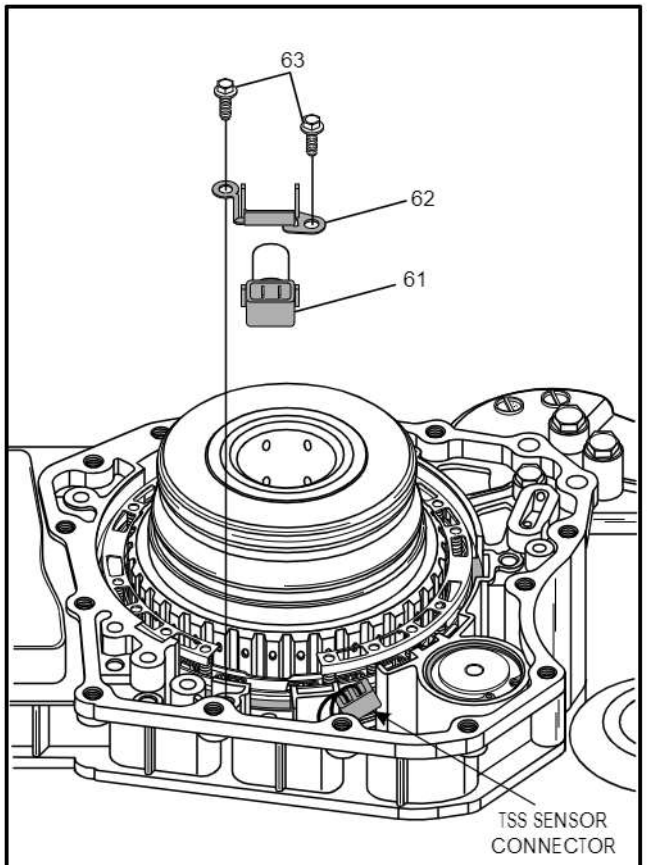

61 TURBINE SPEED SENSOR
62 TURBINE SPEED SENSOR RETAINING CLIP
63 TURBINE SPEED SENSOR RETAINING BOLTS (2 REQUIRED)

Copyright © 2008 ATSG

Figure 51

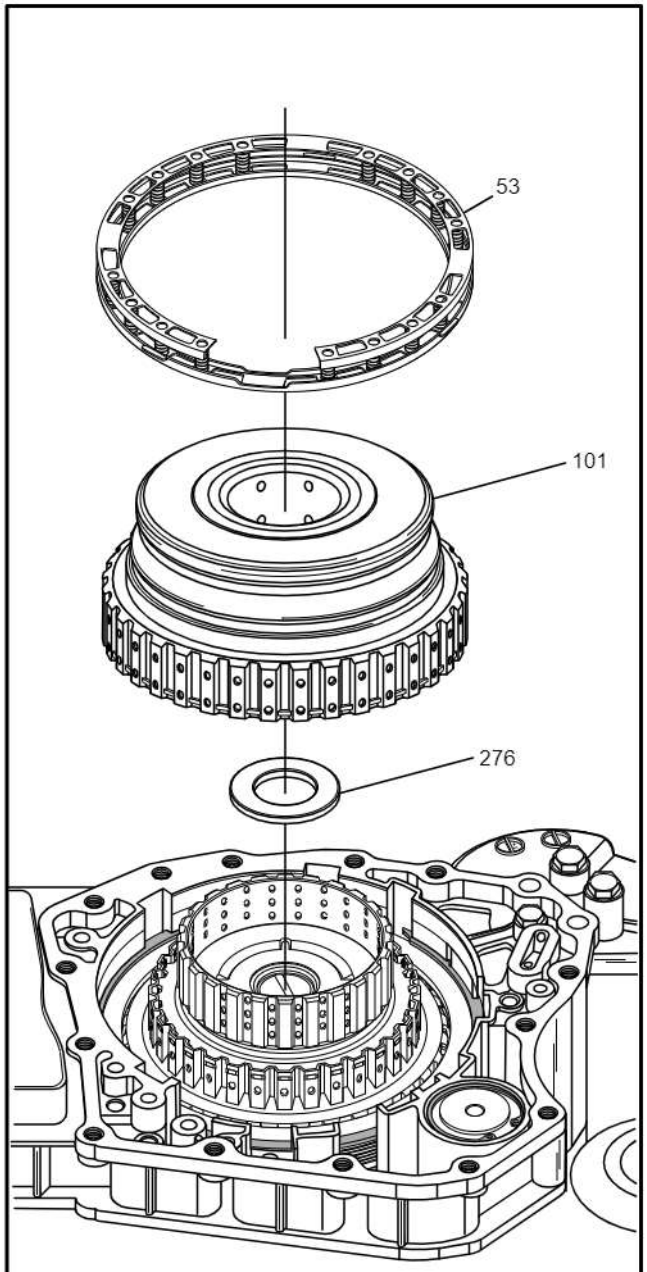

53 2-4 BRAKE CLUTCH PISTON RETURN SPRING ASSEMBLY
101 HIGH AND REVERSE CLUTCH HOUSING ASSEMBLY
276 CLUTCH HOUSING TO HIGH CLUTCH HUB BEARING (NO. 8)

Copyright © 2008 ATSG

Figure 52

TRANSAXLE DISASSEMBLY (CONT'D)

57. Remove the direct clutch hub and the number 8A thrust bearing race, as shown in Figure 53.
58. Remove the number 7 thrust bearing, as shown in Figure 53.
59. Remove the number 7A thrust bearing race and the input sun gear and hub assembly, as shown in Figure 54.
60. Remove the number 6A thrust bearing race, as shown in Figure 54.

Continued on Page 37

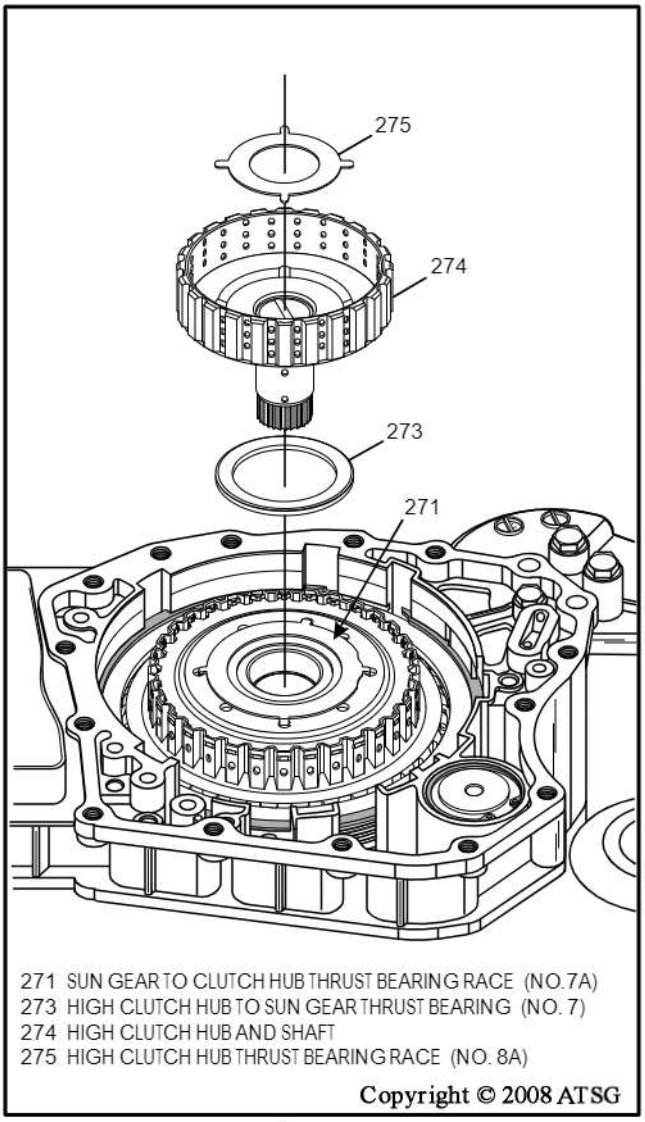

Figure 53

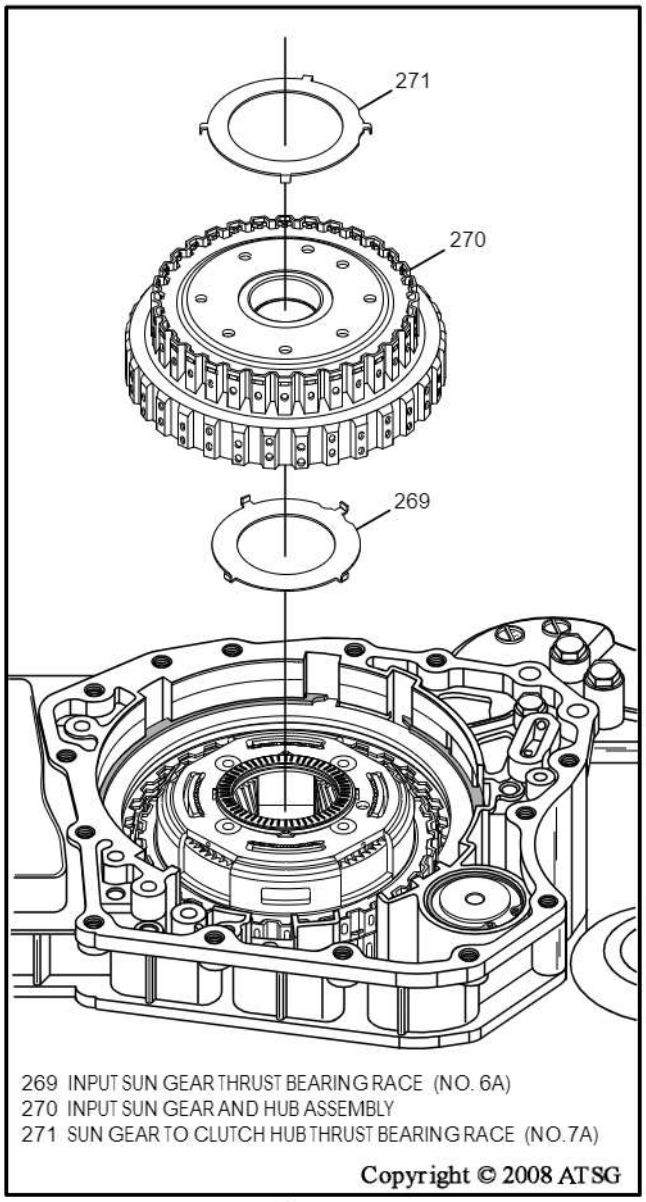

Figure 54

TRANSAXLE DISASSEMBLY (CONT'D)

61. Remove the number 6 thrust bearing and the input carrier assembly, as shown in Figure 55.
62. Remove the number 5 thrust bearing assembly, as shown in Figure 55.
63. Remove the output sun gear, number 4 thrust bearing and output carrier assembly, as shown in Figure 56.
64. Remove the number 3A thrust bearing race, as shown in Figure 56.

Continued on Page 38

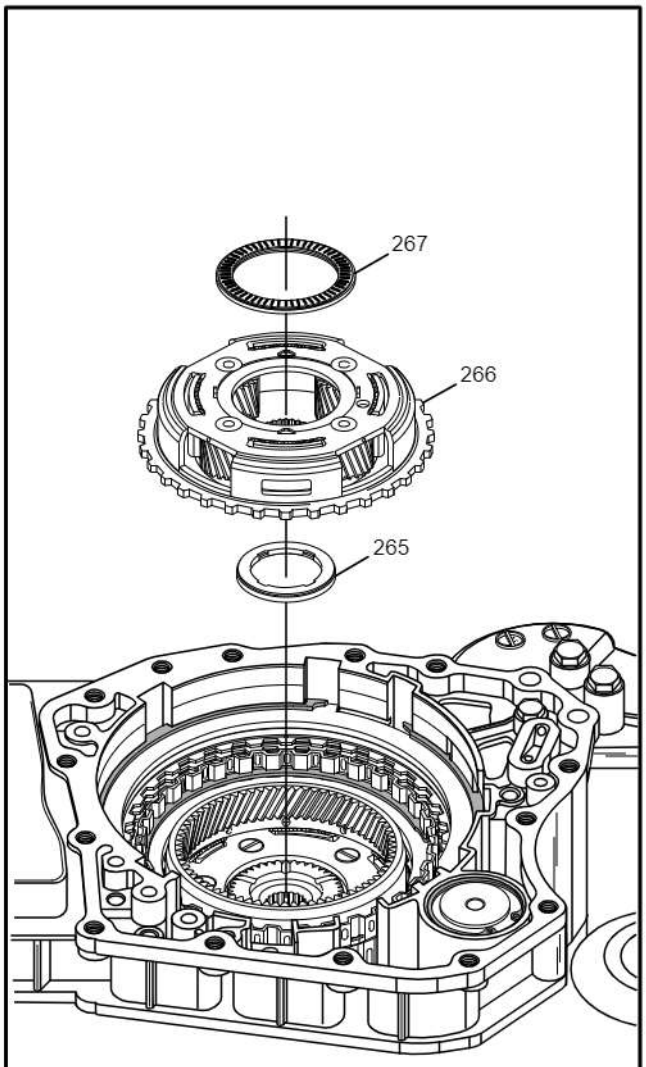

265 SUN GEAR TO INTPUT CARRIER THRUST BEARING (NO. 5)
266 INPUT CARRIER ASSEMBLY
267 INPUT CARRIER TO SUN GEAR THRUST BEARING (NO. 6)

Copyright © 2008 ATSG

Figure 55

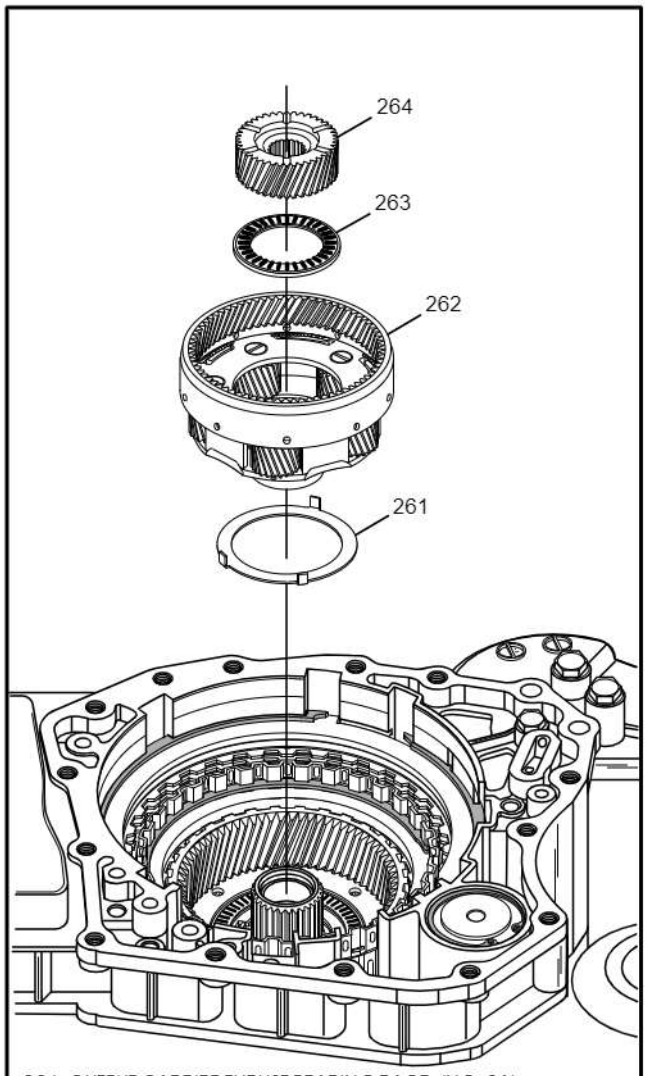

261 OUTPUT CARRIER THRUST BEARING RACE (NO. 3A)
262 OUTPUT CARRIER/INPUT INTERNAL RING GEAR ASSEMBLY
263 OUTPUT CARRIER TO SUN GEAR THRUST BEARING (NO. 4)
264 OUTPUT CARRIER SUN GEAR

Copyright © 2008 ATSG

Figure 56

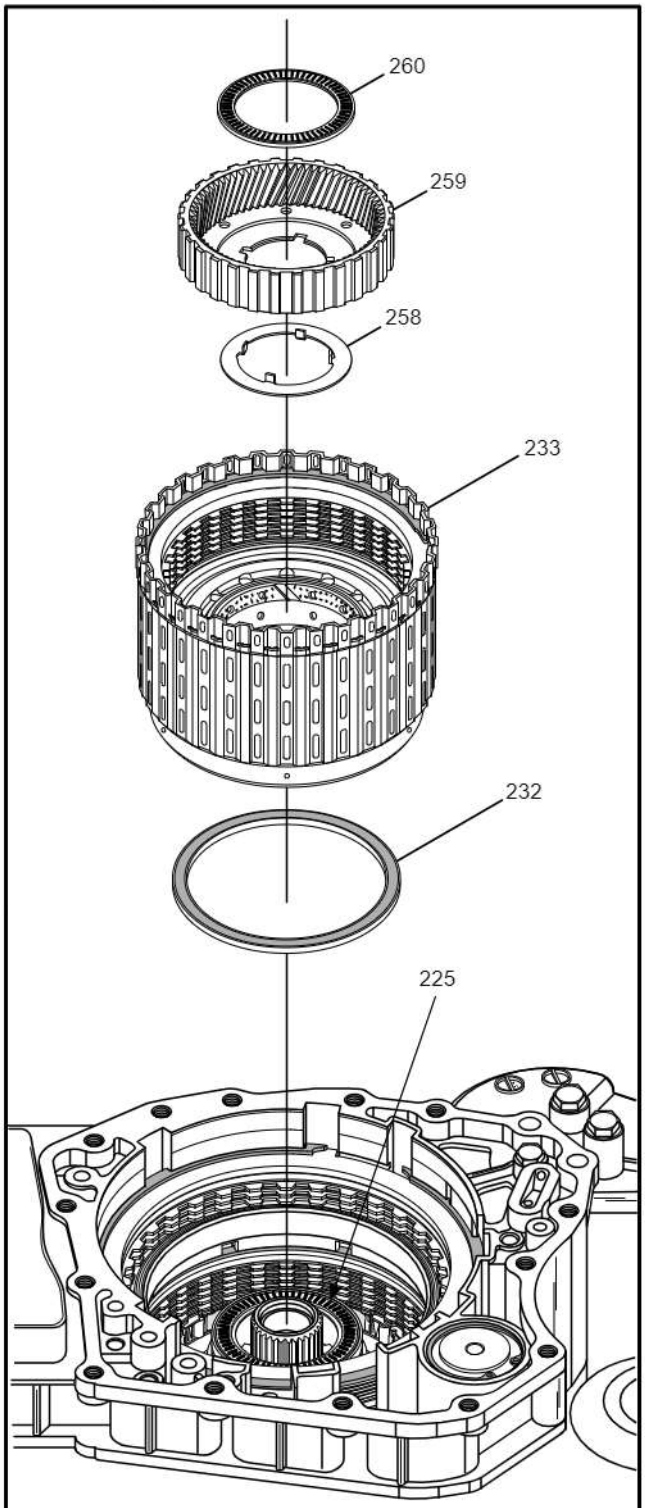

225 LOW CLUTCH SUPPORT TO RING GEAR BEARING (NO. 2)
232 LOW CLUTCH HOUSING TO CASE THRUST BEARING (NO. 1)
233 LOW CLUTCH HOUSING ASSEMBLY
258 RING GEAR TO SUPPORT, THRUST BEARING RACE (NO. 2A)
259 OUTPUT CARRIER INTERNAL RING GEAR/LOW CLUTCH HUB
260 RING GEAR TO OUTPUT CARRIER THRUST BEARING (NO, 3)

Copyright © 2008 ATSG

Figure 57

TRANSAXLE DISASSEMBLY (CONT'D)

65. Remove output carrier internal ring gear/low clutch hub (259), as shown in Figure 57.
66. Remove the number 3 thrust bearing (260), as shown in Figure 57.
67. Remove number 2A thrust bearing race (258), as shown in Figure 57.
68. Remove the low clutch housing assembly (233) as shown in Figure 57.
69. Set the low clutch housing aside for component rebuild section.
70. Remove the low clutch housing to case thrust bearing (232), which is the number 1 bearing, as shown in Figure 57.
    Note: This bearing may be stuck in the back side of low clutch housing.
71. Remove number 2 thrust bearing (225) from the low clutch support in case, as shown in Figure 58.
72. Set all gear train components aside for the component rebuild section.

Continued on Page 39

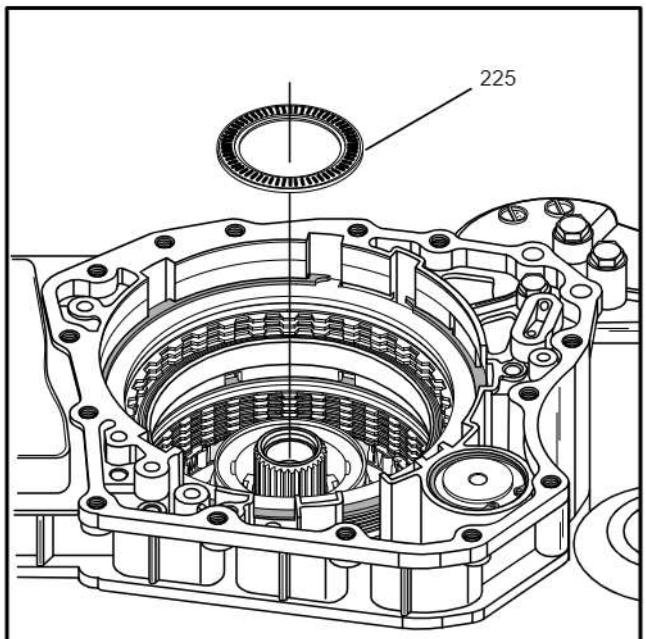

225 LOW CLUTCH SUPPORT TO RING GEAR BEARING (NO. 2)

Copyright © 2008 ATSG

Figure 58

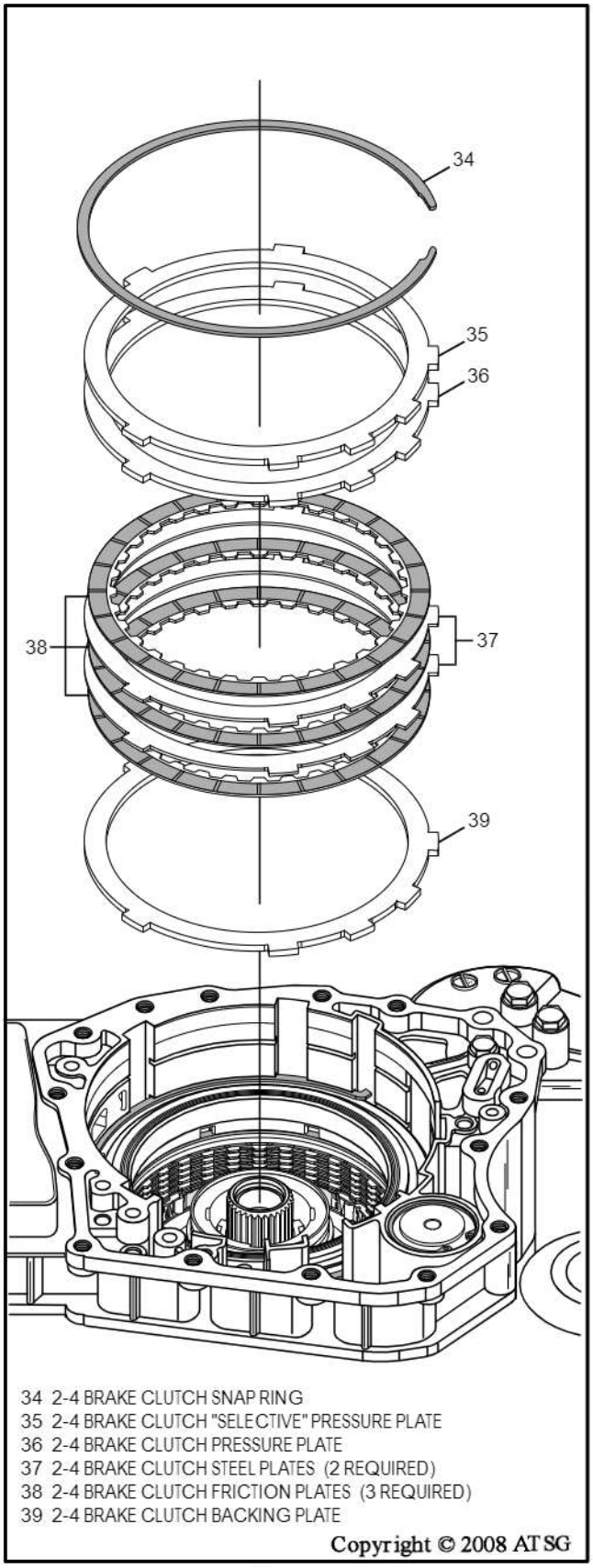

Figure 59

TRANSAXLE DISASSEMBLY (CONT'D)

73. Remove 2-4 brake clutch pressure plate snap ring, as shown in Figure 59.
74. Remove both 2-4 brake clutch pressure plates, as shown in Figure 59.
75. Remove 2-4 brake clutch pack from transaxle case, as shown in Figure 59.
76. Remove 2-4 brake clutch backing plate from case, as shown in Figure 59.
77. Install universal compressor tool, as shown in Figure 60, to compress the low/reverse clutch piston retainer.

Caution: Compress the retainer only amount needed to remove snap ring. Overpressing will damage the retainer edges.

Continued on Page 41

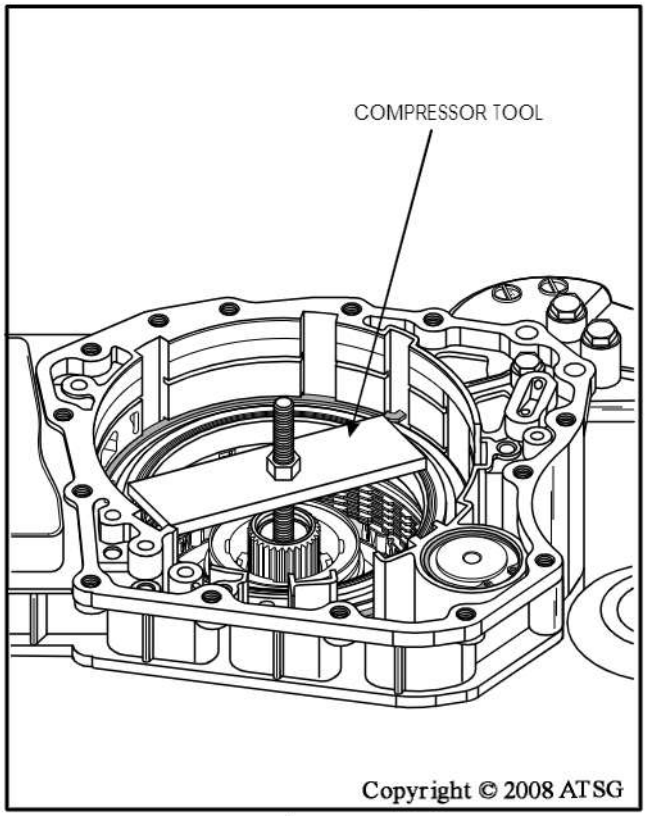

Figure 60

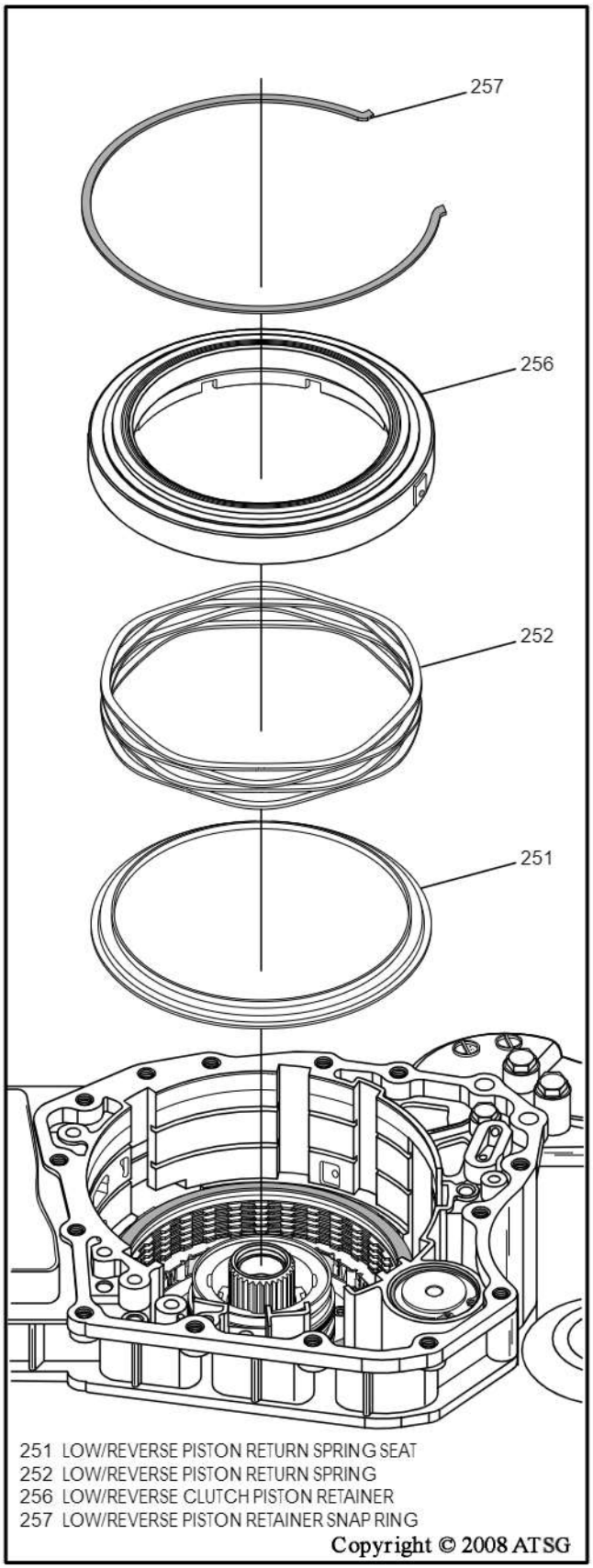

Figure 61

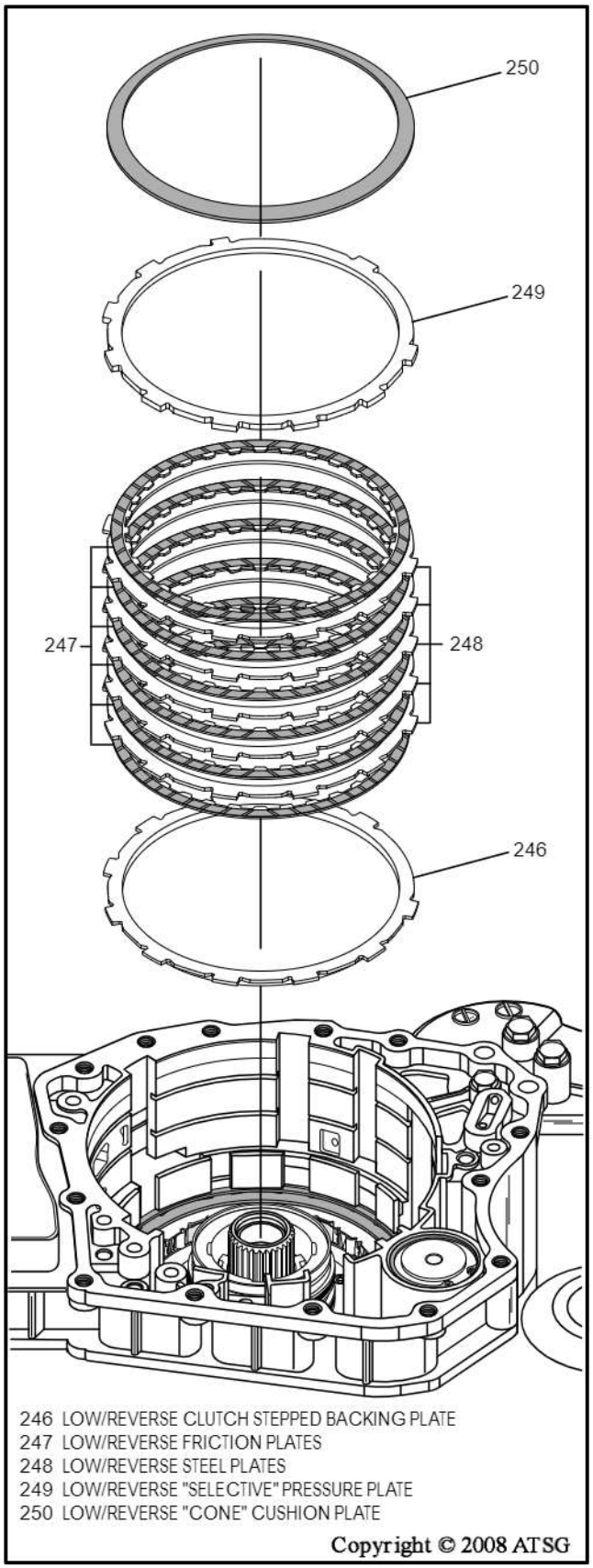

Figure 62

TRANSAXLE DISASSEMBLY (CONT'D)

78. Remove the low/reverse clutch retainer snap ring, as shown in Figure 61.
79. Remove the compressor tool slowly.
80. Remove low/reverse clutch retainer assembly, as shown in Figure 61.
81. Remove the low/reverse clutch piston return spring and spring seat, as shown in Figure 61.
82. Remove low/reverse "cone" cushion plate, as shown in Figure 62.
83. Remove low/reverse clutch "selective" pressure plate, as shown in Figure 62.
84. Remove low/reverse clutch plates, as shown in Figure 62.
85. Remove low/reverse clutch "stepped" backing plate, as shown in Figure 62.
86. Remove the low roller clutch retaining snap ring, as shown in Figure 63.
87. Remove low roller clutch assembly, as shown in Figure 63.
88. Remove direct clutch accumulator snap ring and remove all direct clutch accummulator parts, as shown in Figure 64.
    Note: Carefully blow air into accummulator cover hole to remove, if necessary. Tag both springs for identification as they are similar to others.

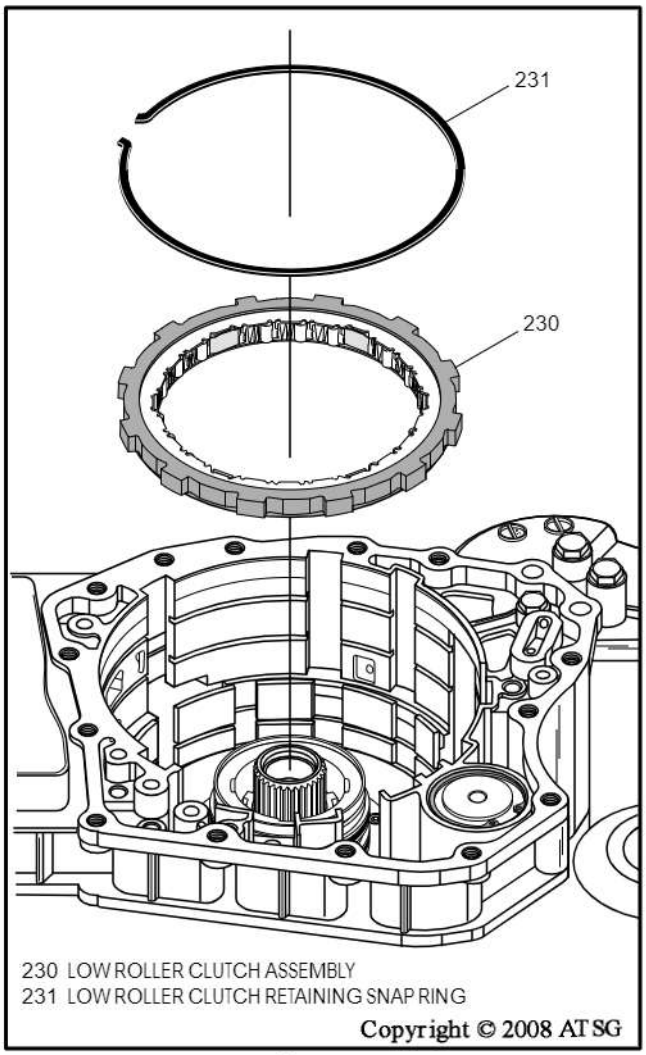

Figure 63

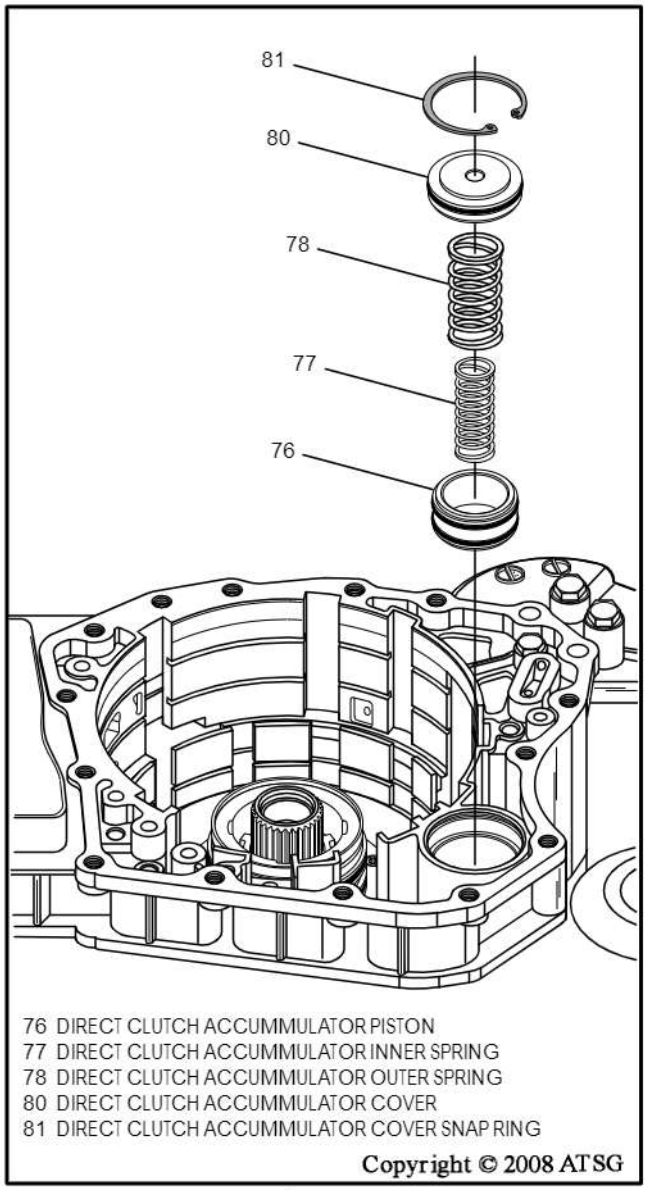

Figure 64

COMPONENT REBUILD

Transaxle Case Assembly

Transfer Gear "A" and Low Clutch Support

It is a must, that this assembly be disassembled, cleaned and inspected for wear, as this is a perfect place for dirt and debris to gather. The entire low clutch support and transfer gear must be removed as an assembly. Use the following procedure:

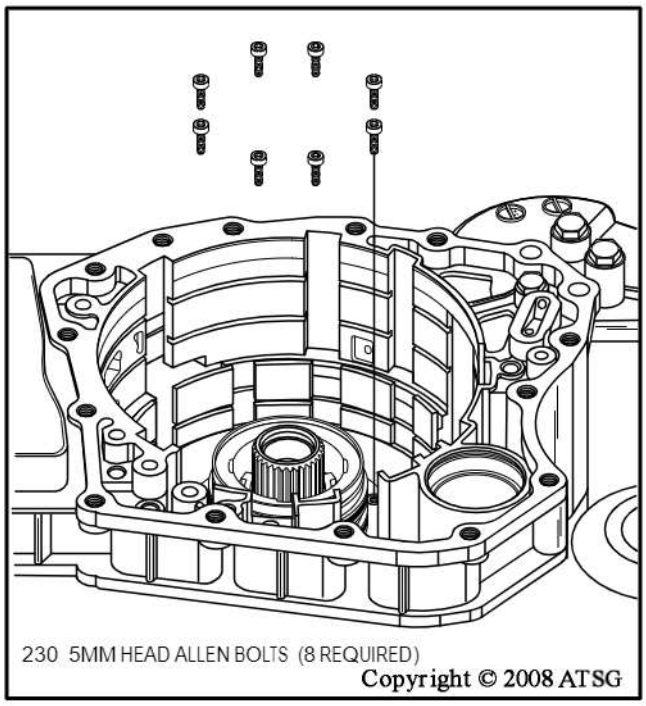

Figure 65

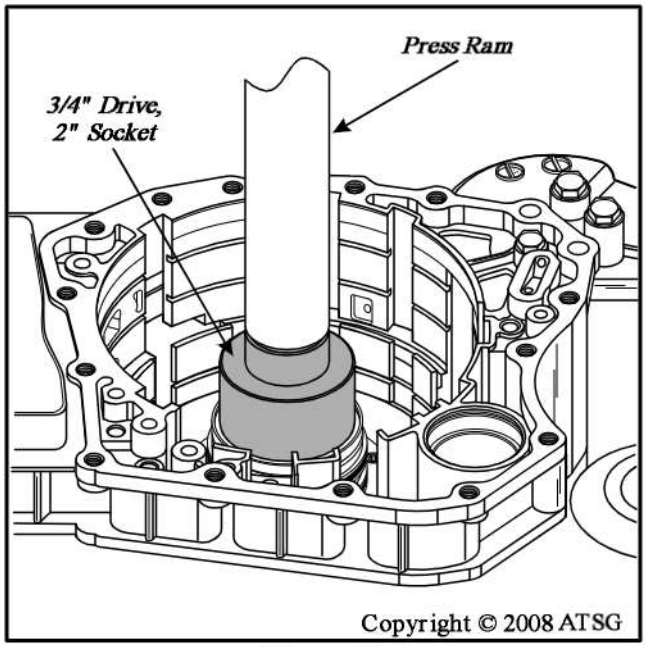

Figure 66

Transaxle Case Assembly (Cont'd)

1. Remove the eight 5mm allen head retaining bolts from bottom of the case, as shown in Figure 65.
2. A press is then required to remove assembly from the case, using a 3/4" drive, 2" socket to press against support, as shown in Figure 66. ***Caution: Ensure that you press against the support, as shown in Figure 66. Special tools are not yet available from dealer and some must be manufactured, which we will discuss later in this manual.***
3. Set the low clutch support and transfer gear assembly aside for disassembly and rebuild.
4. Remove the two 17mm head bolts (595) with "O" rings, as shown in Figure 67.
5. Remove the 13mm head bolt (596) without the "O" ring, as shown in Figure 67.

Continued on Page 43

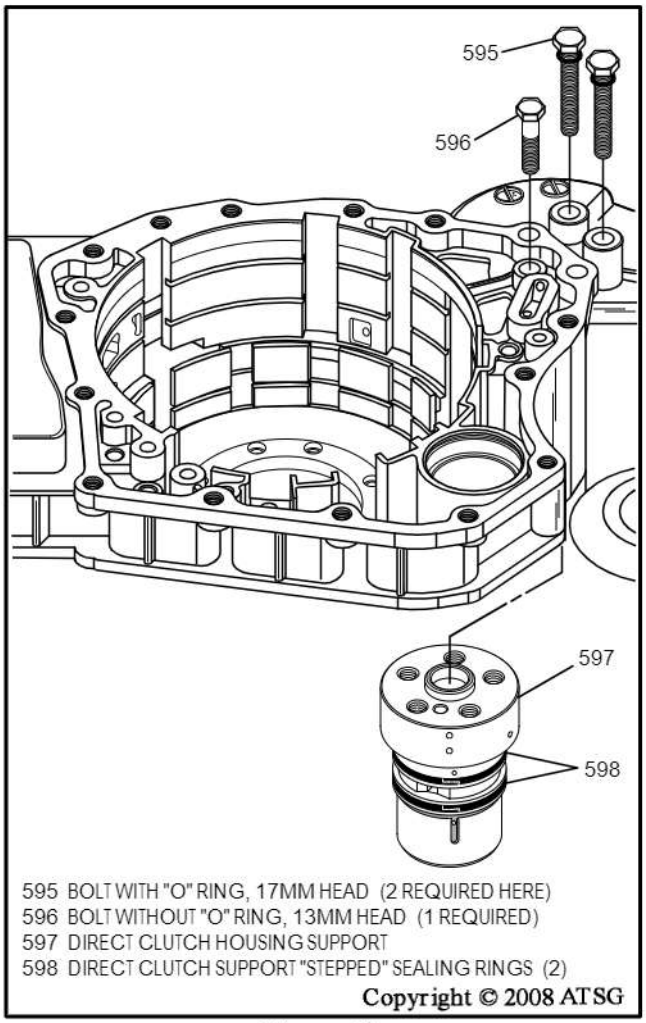

Figure 67

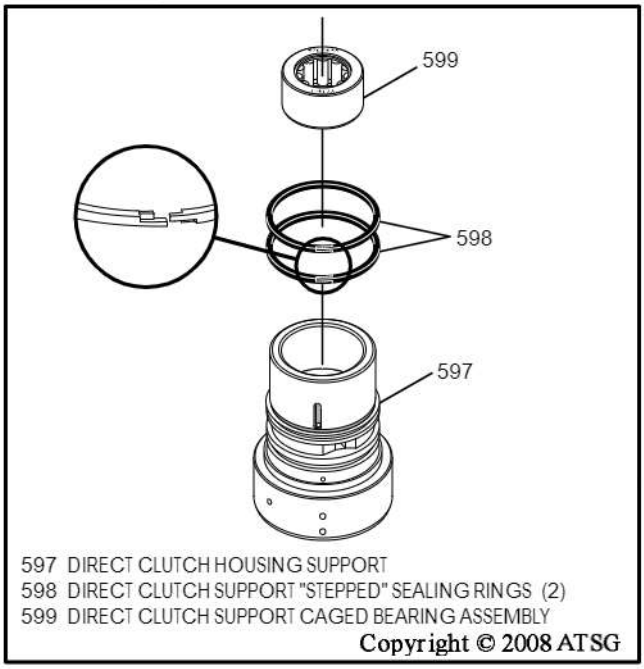

Figure 68

Transaxle Case Assembly (Cont'd)

6. Remove the direct clutch support from case, as shown in Figure 67.
7. Remove and discard the direct clutch "stepped" sealing rings, as shown in Figure 68.
8. Replace the caged needle bearing as necessary using the proper drivers (See Figure 68).
9. Install two new direct clutch "stepped" sealing rings onto direct clutch support, as shown in Figure 68, ensuring steps are engaged properly.
10. Re-install direct clutch support, ensuring that the lube holes are aligned properly, as shown in Figure 69.
11. Start the 13mm head bolt first and tighten only finger tight (See Figure 69).
12. Install new "O" rings on the two 17mm head bolts and lubricate with a small amount of Trans-Jel® (See Figure 69).
13. Torque the three bolts to 38 N·m (28 ft.lb.), as shown in Figure 70.

Continued on Page 44

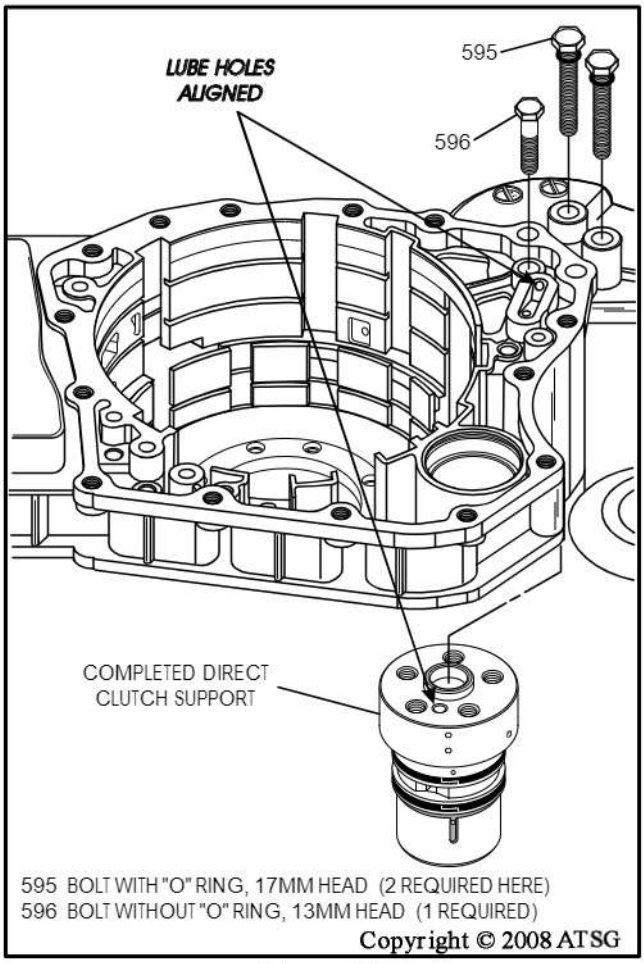

Figure 69

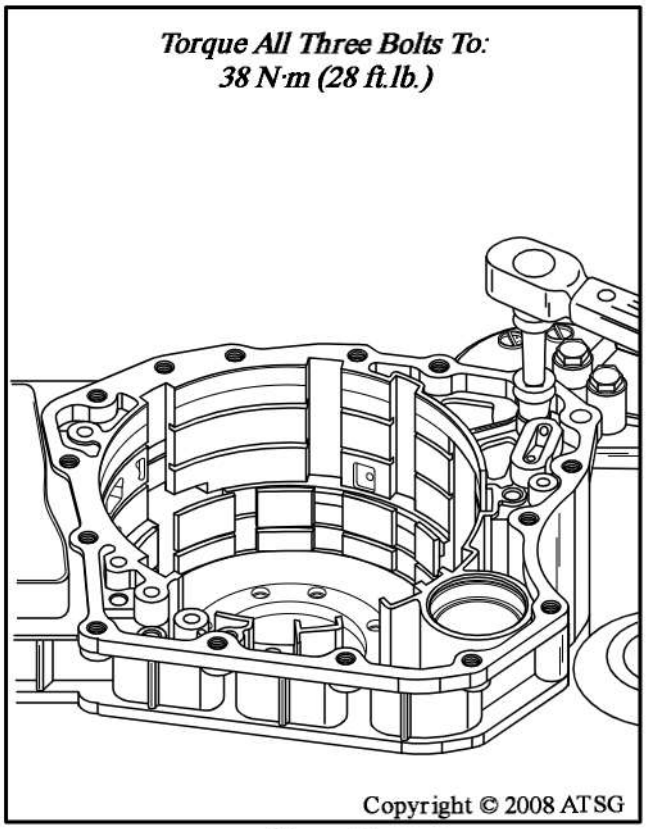

Figure 70

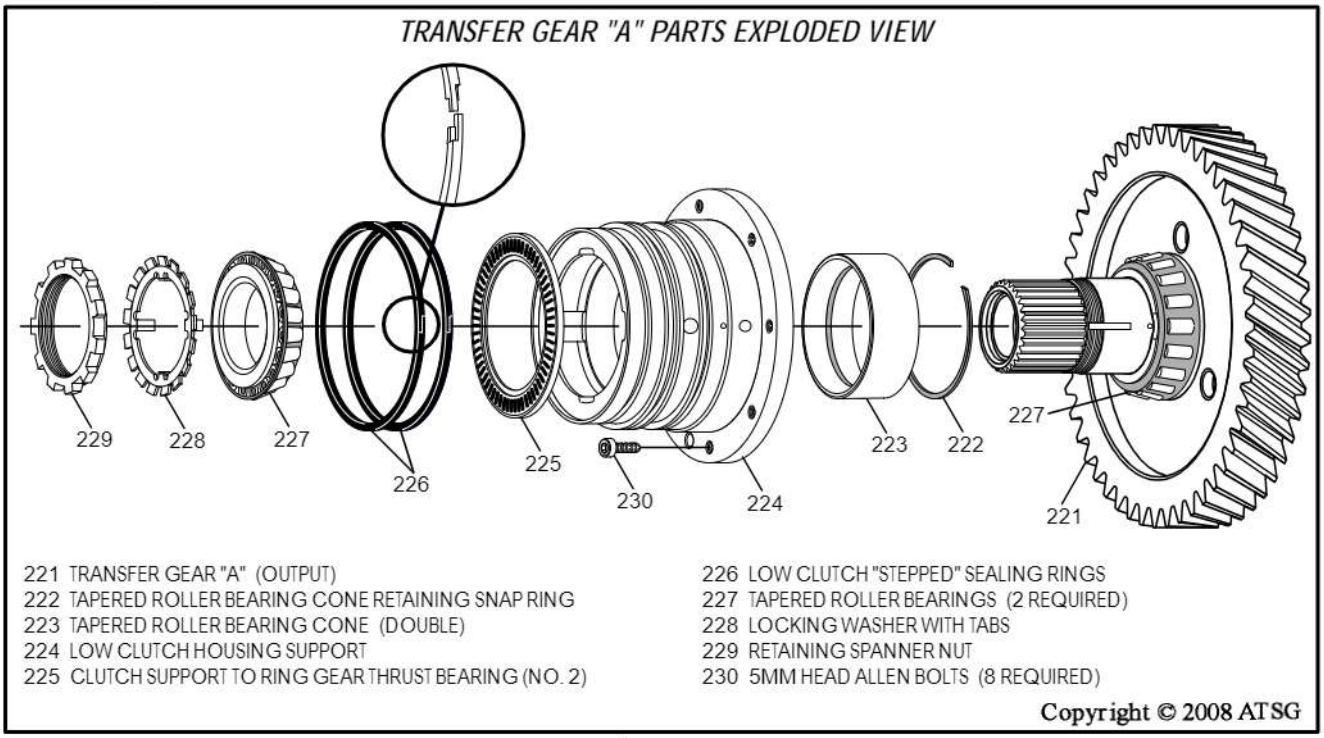

Figure 71

Transaxle Case Assembly (Cont'd)

14. Using a small punch bend down the locking tab on the tabbed locking washer, used to lock the spanner nut in place (See Figure 71).
15. Loosen the spanner nut using a punch and then remove the spanner nut and locking washer, as shown in Figure 71.
16. A press is then required, along with a 15/16" deep socket and a bearing remover, as shown in Figure 72, to remove the transfer gear and shaft from the low clutch support.
17. Clean all transfer gear parts thoroughly and dry with compressed air.
18. Install new "stepped" sealing rings in grooves of the low clutch support and ensure that steps are properly engaged, as shown in Figure 71.
19. Replace bearings and races as necessary, lube the bearings and install low clutch support on top of the transfer gear and shaft.
20. Install roller bearing over the shaft, as shown in Figure 73.

Continued on Page 45

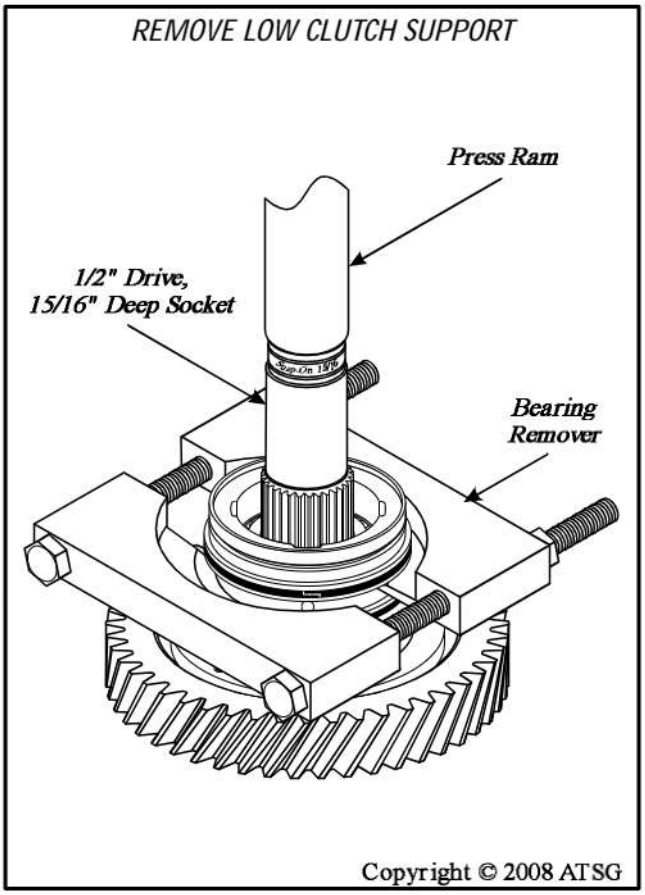

Figure 72

Transaxle Case Assembly (Cont'd)

21. Use press to install roller bearing, as shown in Figure 73, and this is where we will set the roller bearing pre-load. This will require that you release the press several times to check the bearing pre-load.
    Note: Bearing pre-load should be: 0.63-1.30N·m (5.6 - 11.5 in.lb.). All bearing pre-load refers to "rotating torque required".
22. Install the locking washer with tabs and the spanner nut, as shown in Figure 74.
    Note: The socket needed to torque spanner nut, shown in Figure 74, must be made as described under "Special Tool Requirement".
23. Torque the spanner nut, using "manufactured" socket to 35-40 N·m (25-35 ft.lb.).

Special Tool Requirement

The "Special Tools" that are needed for this transaxle are not available to the new car dealer or the after market. Therefore, in an effort to make the rebuilding process a little easier, the AAMCO tecnical department came up with some great ideas that we are going to share with you.

In order to tighten the "Spanner" nut to the proper torque specification on Transfer Gear "A" assembly, it was necessary to make a socket. First bend down the locking tab on the locking washer for the nut and loosen the nut using a punch. Purchase a short piece of 1-3/4" exhaust pipe and using the nut as a template, mark the end of the pipe. Very carefully cut and notch the pipe to match the nut, as shown in Figure 74. Weld a short piece of metal to the opposite end of the pipe, with a large nut welded to it, as shown in Figure 74. The overall length of the new socket with nut is approximately 4-1/2 inches.

Continued on Page 46

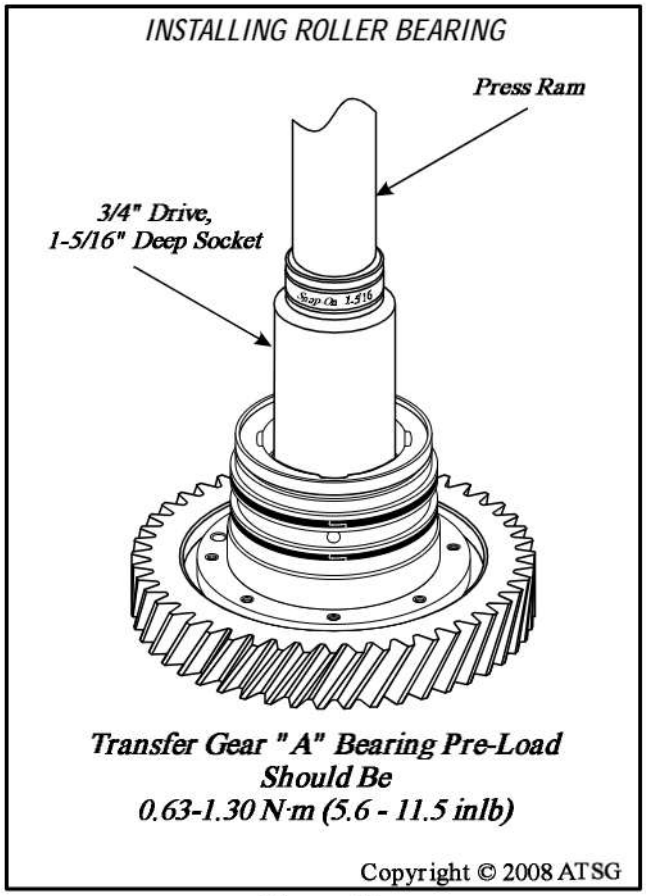

Figure 73

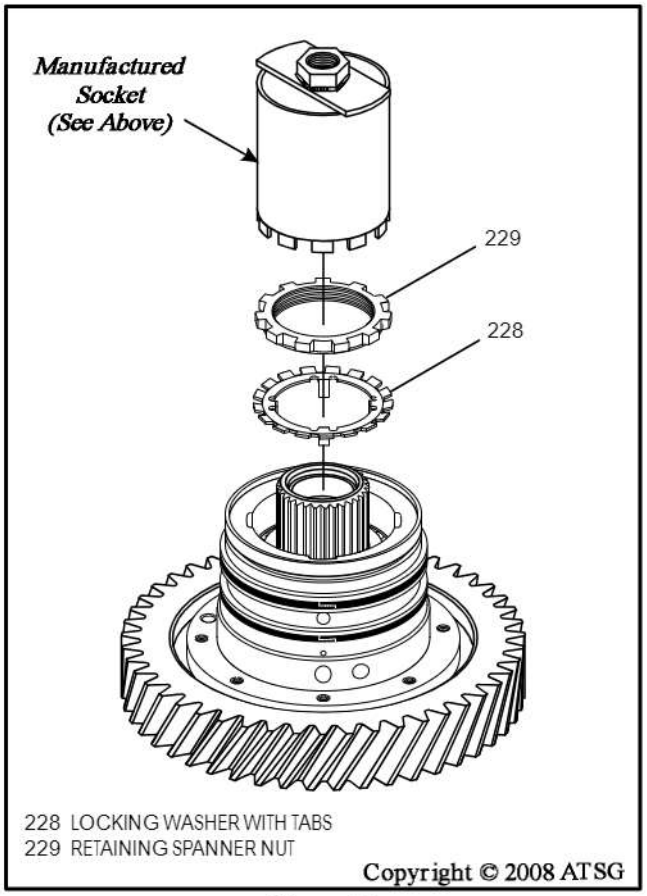

Figure 74

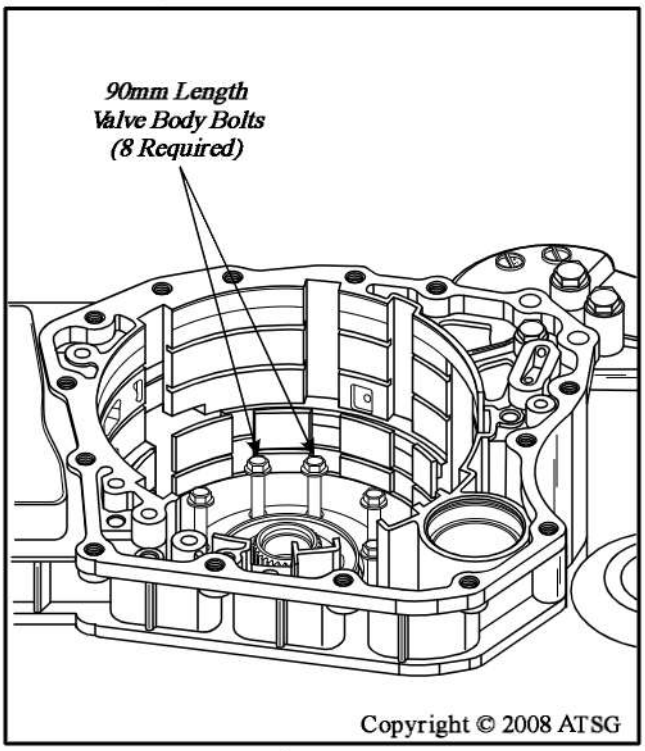

Figure 75

Transaxle Case Assembly (Cont'd)

24. Install transfer gear "A" assembly, using eight of the 90mm length valve body to case bolts, as shown in Figure 75.
    Note: These are used to align the low clutch support properly during the "press-in" procedure, as the support goes in 1 direction only, to align lube holes. You "must" use eight bolts, as the bolt holes are off-set and this will guarantee proper alignment.
25. Press transfer gear "A" and low clutch support into case, using the 3/4" drive, 2" socket, as shown in Figure 76.
26. Remove the eight, 90mm length, valve body bolts, as shown in Figure 77.

Continued on Page 47

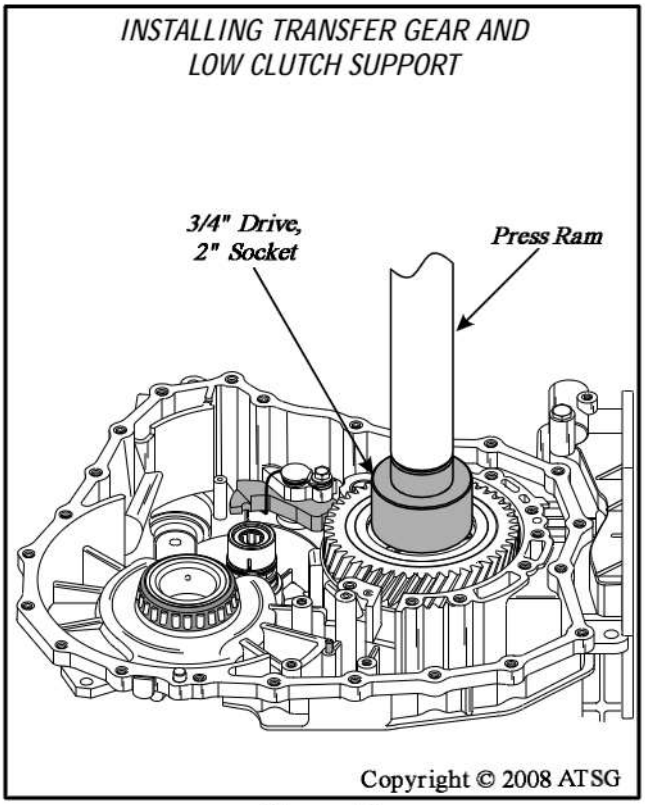

Figure 76

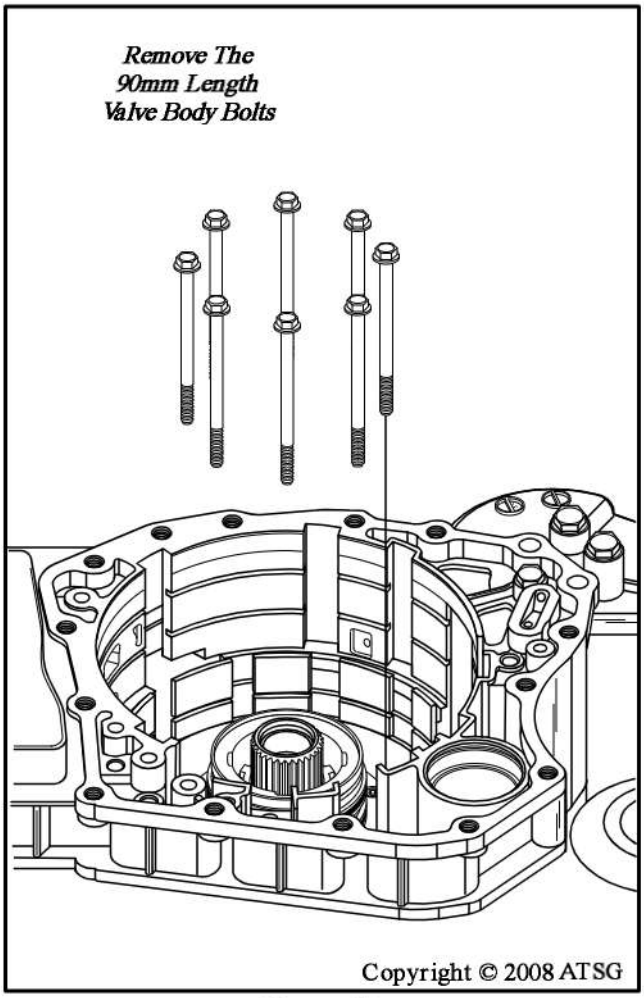

Figure 77

Transaxle Case Assembly (Cont'd)

27. Install the eight 5mm allen head low clutch support retaining bolts, as shown in Figure 78, and torque to 9 N·m (80 in.lb.)
28. Install new seals on direct clutch accummulator piston, as shown in Figure 79, and lube with a small amount of Trans-Jel®.
29. Install direct clutch accummulator piston into case, as shown in Figure 79.
30. Install inner and outer accummulator springs into case bore, as shown in Figure 79.
31. Install new seal on direct clutch accummulator cover, as shown in Figure 79, and lube with a small amount of Trans-Jel®.
32. Install direct clutch accummulator cover into case bore, as shown in Figure 79.
33. Compress direct clutch accummulator cover and install snap ring (See Figure 79).

Continued on Page 48

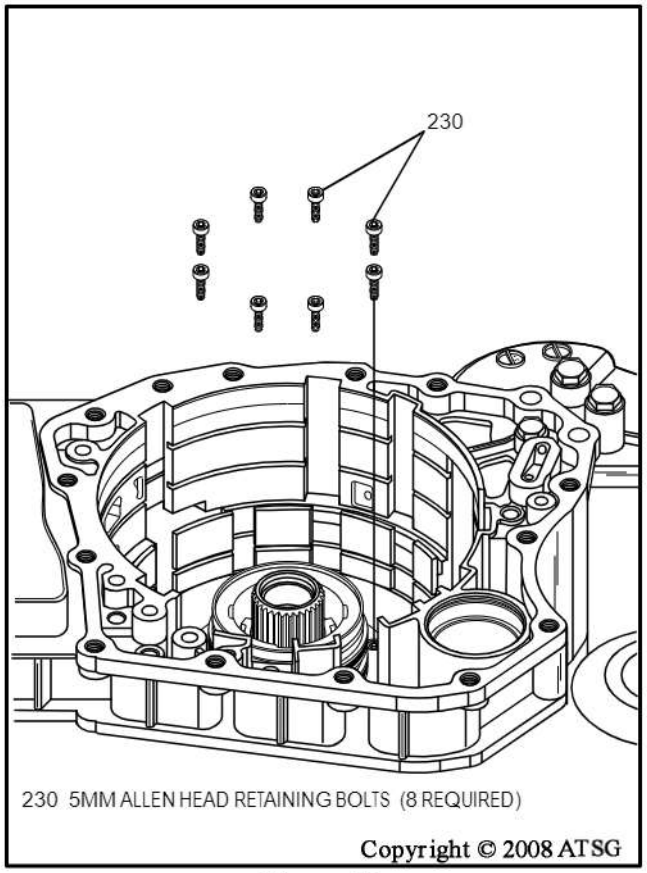

Figure 78

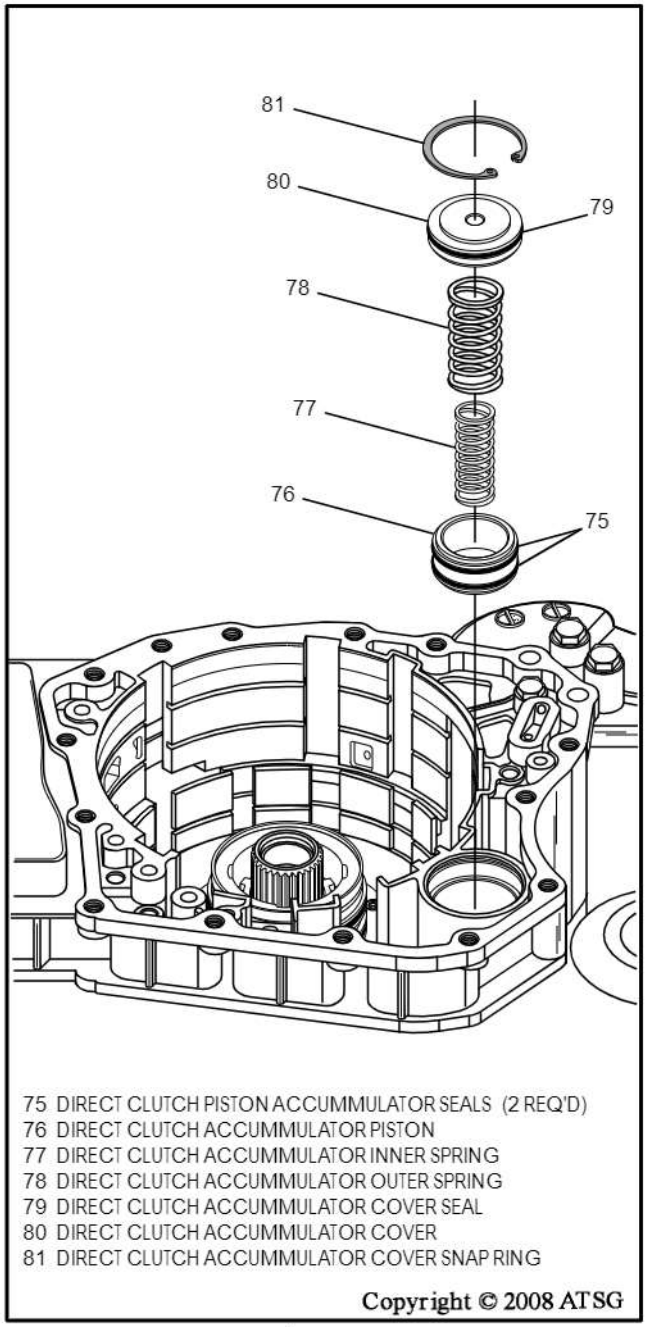

Figure 79

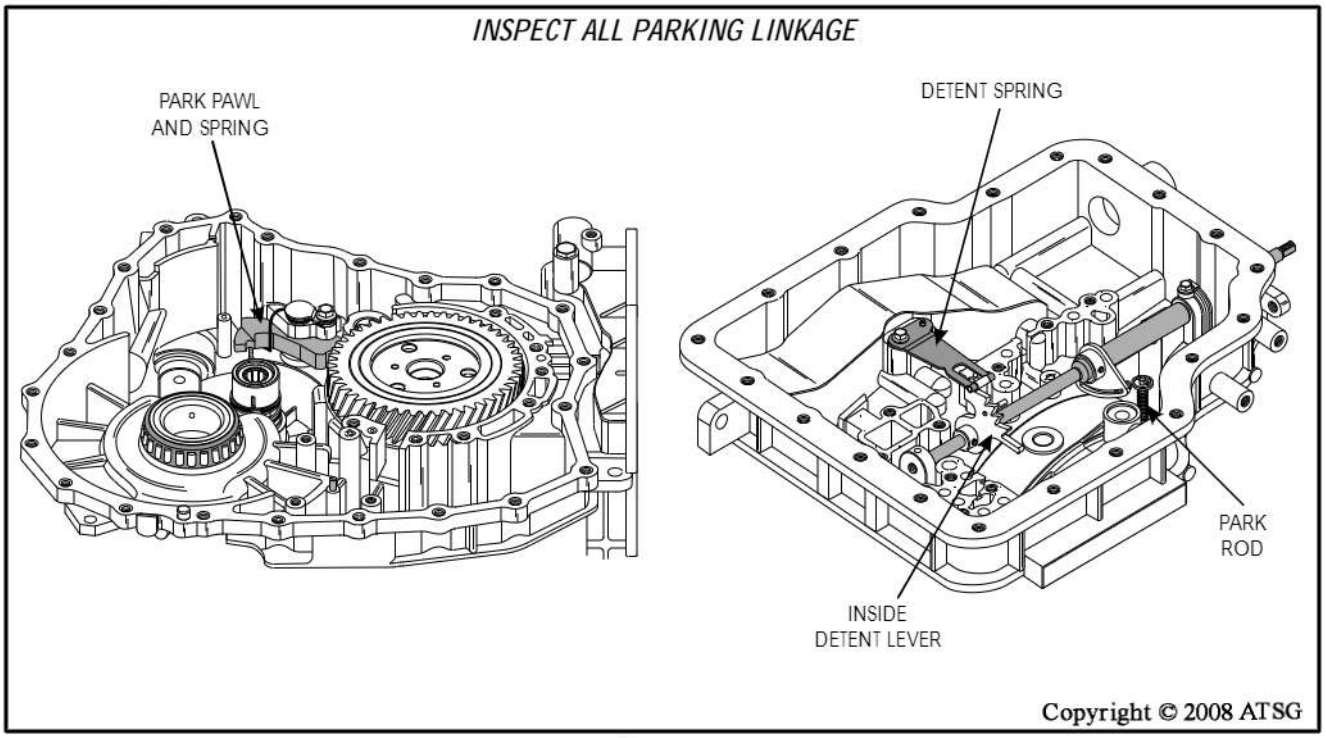

Figure 80

Transaxle Case Assembly (Cont'd)

34. Inspect all parking linkage for any wear and/or damage, and for proper operation. Repair or replace as necessary. Refer to Figure 80.

35. Install a new manual shaft seal and ensure it is approximately 1/16" below case surface, as shown in Figure 81.

36. Measure width of the low/reverse clutch snap ring groove, as shown in Figure 82, using a dial caliper.

Continued on Page 49

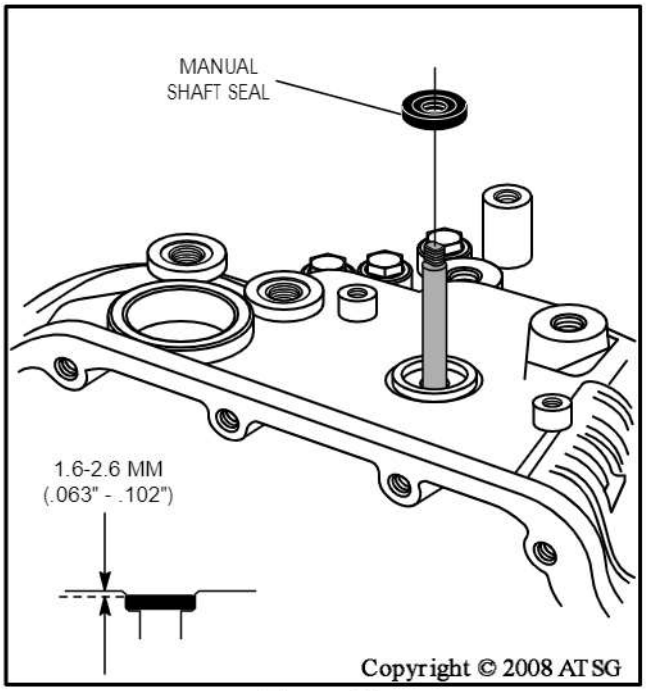

Figure 81

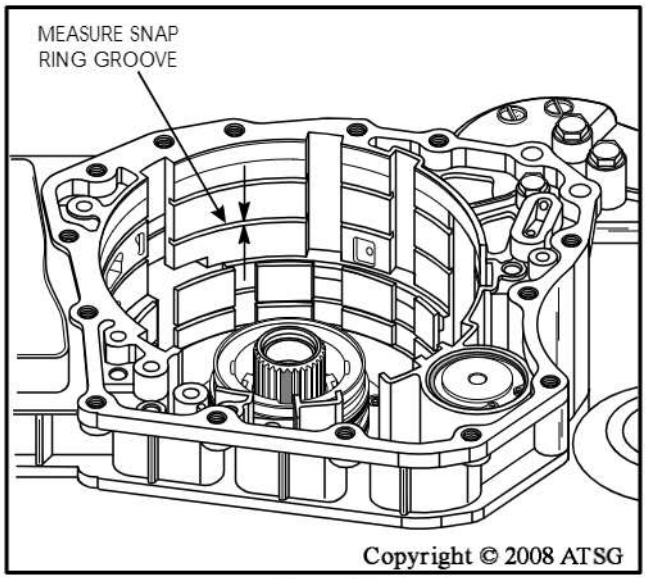

Figure 82

Transaxle Case Assembly (Cont'd)

37. Now measure the thickness of the low/reverse clutch snap ring, using a dial caliper.
38. Subtract thickness of snap ring from snap ring groove thickness to get "snap ring clearance".
39. "Snap ring clearance" should be 0.0 to 0.2mm (.000" - .008"), as shown in Figure 83.
40. Select a snap ring thickness from the chart in Figure 83, as necessary.
41. Install the large and small "O" rings onto the reduction servo cover, as shown in Figure 84.
42. Install the "O" ring onto the reduction servo cushion spring retainer, lube with small amount of Trans-Jel®, as shown in Figure 84.
43. Install cushion spring and the cushion spring retainer into the servo cover (See Figure 84).
44. Compress cushion spring retainer and install the snap ring, as shown in Figure 84.
45. Install new "O" ring seal onto the reduction servo apply piston, as shown in Figure 84.

Continued on Page 50

Low/Reverse Clutch "Snap Ring" Clearance Should Be 0.0mm - 0.2mm (.000" - .008")	
Selective Low/Reverse Clutch Snap Rings	
2.1mm (.083")	***2.2mm (.087")***
2.3mm (.091")	

Copyright © 2008 ATSG

Figure 83

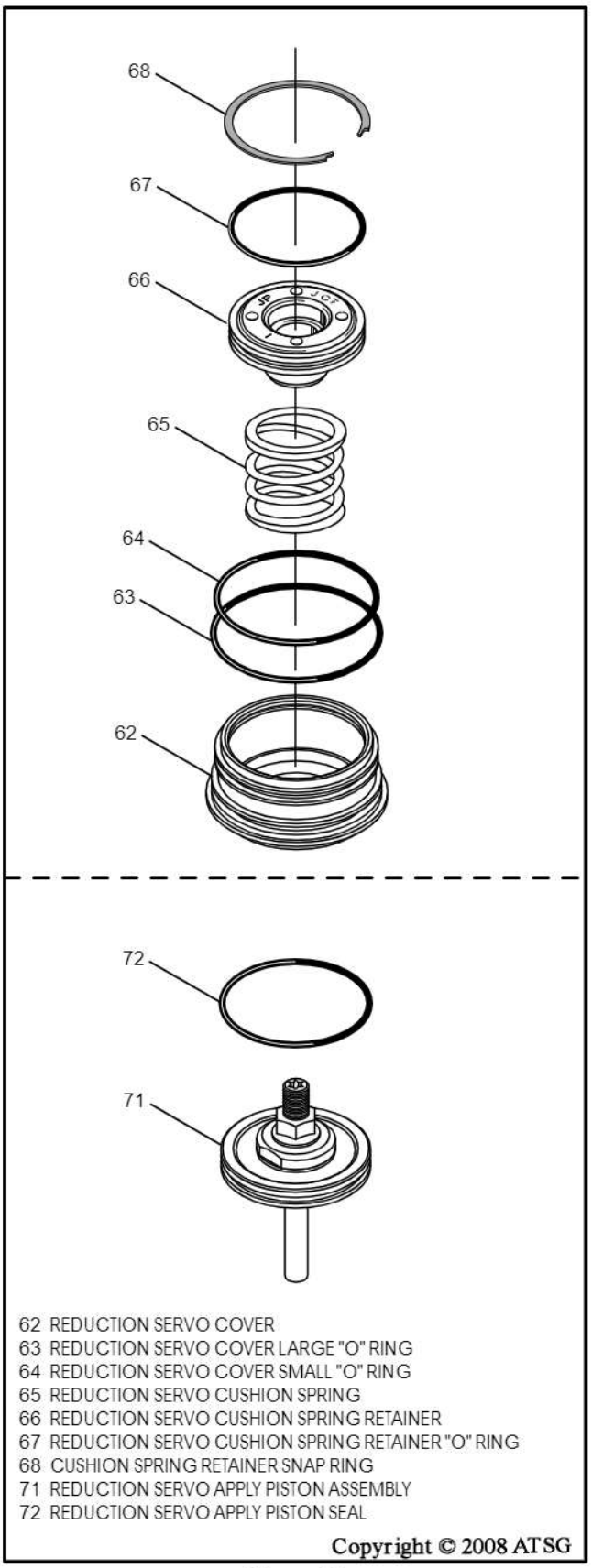

Figure 84

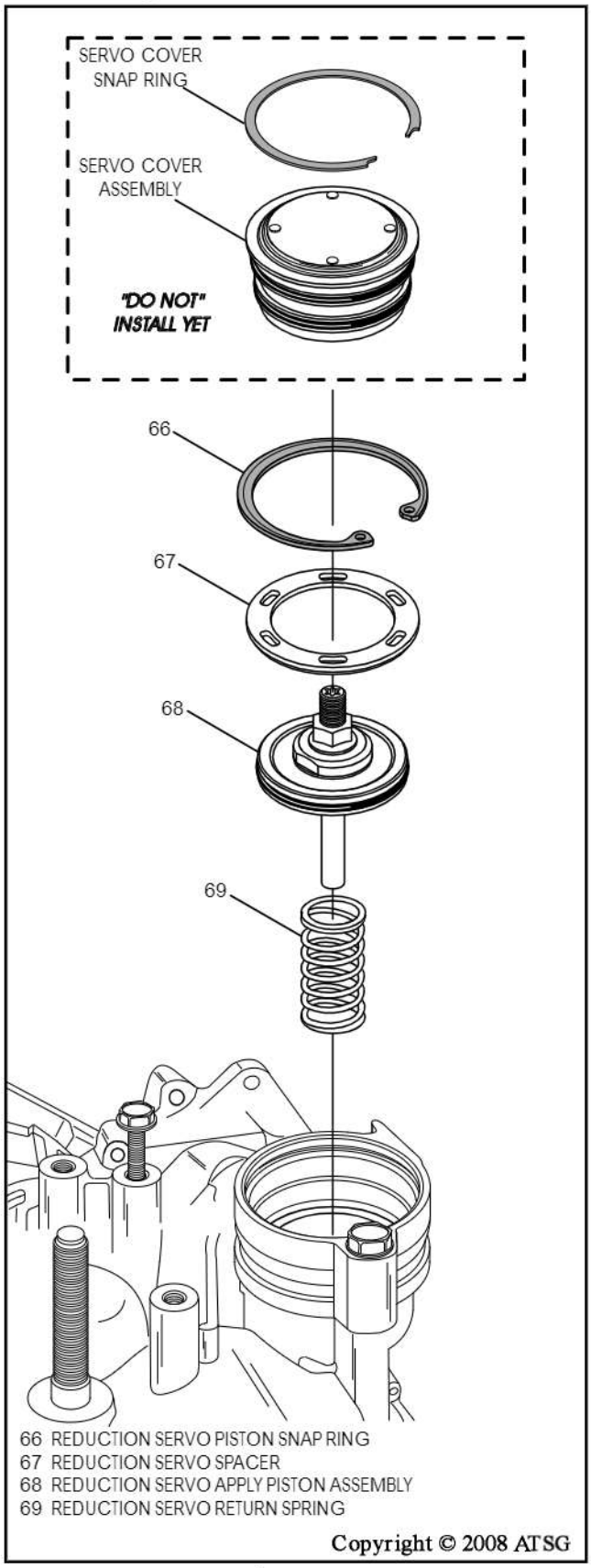

Figure 85

Transaxle Case Assembly (Cont'd)

46. Install the reduction servo piston return spring into case bore, as shown in Figure 85.
47. Install the reduction servo piston assembly into case bore, as shown in Figure 85.
48. Install the reduction servo spacer on top of the piston, as shown in Figure 85.
49. Install 14mm deep socket on adjusting nut, as shown in Figure 86.
50. Compress the piston and return spring, using a large screwdriver and install the snap ring, as shown in Figure 86.
    Note: "Do Not" install the servo cover and snap ring, as we must still adjust the band during the final assembly process.
51. The transaxle case is now ready for the final assembly process.

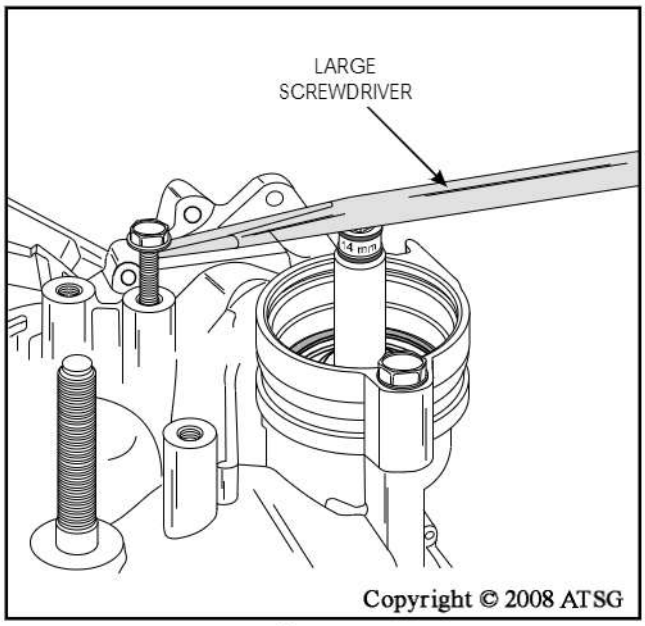

Figure 86

COMPONENT REBUILD (CONT'D)

Input Shaft

There are currently two different input shafts, one with three sealing rings and one with two sealing rings, as shown in Figure 88. The third sealing ring goes into Transfer Gear "A", located directly behind the oil pump assembly and seals lube oil from escaping, which of course changes the inside diameter of the transfer gear. ATSG feels that this 3rd sealing ring may be an upgrade, as we have seen one shaft that was just not yet machined, as shown in Figure 88. Some transfer gears are bored to accept 3rd sealing ring, as shown in Figure 87, and some are not. You must measure the inside diameter, as shown in Figure 87, to determine whether it is used with a 2 ring input shaft, or a 3 ring input shaft. The transfer gears also vary in tooth count between the various models, as shown in the chart in Figure 28.

Be very careful with the selection process, if replacement parts are necessary.

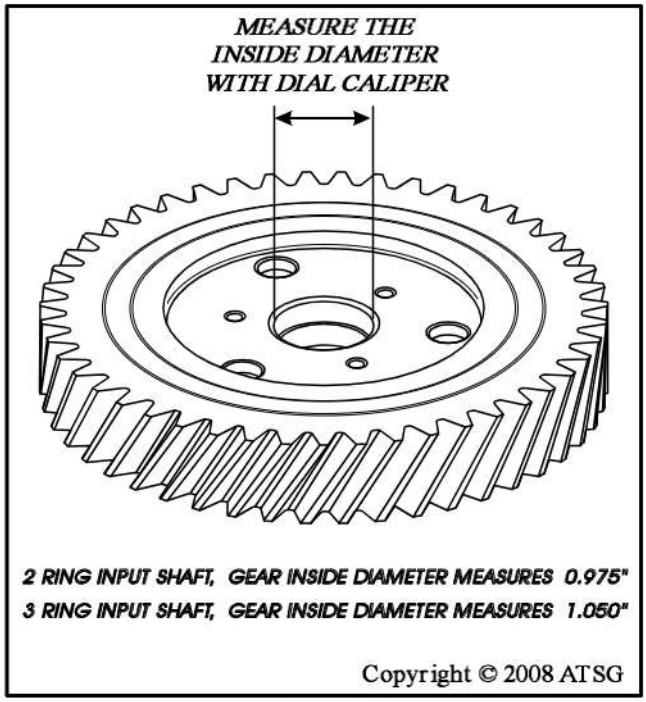

Figure 87

Special Note:
The three ring input shaft and transfer sprocket is definitely the better design and will make a much more durable transaxle.

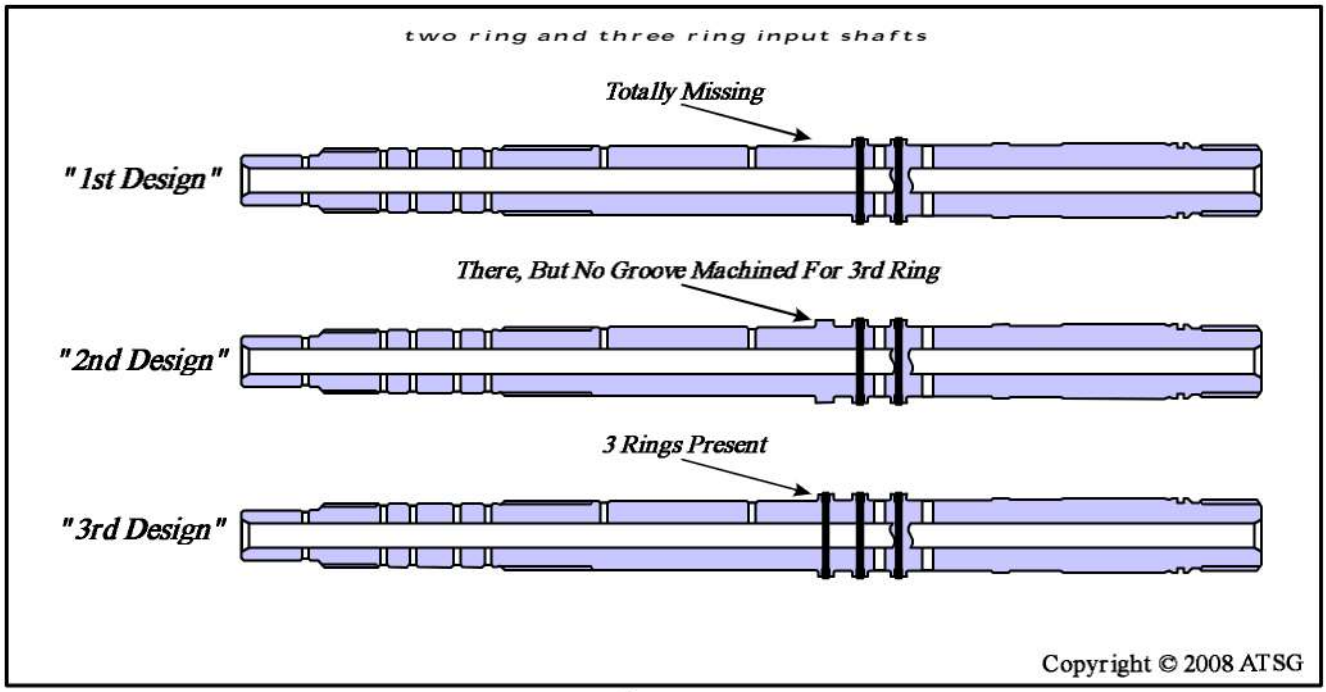

Figure 88

COMPONENT REBUILD (CONT'D)

Input Shaft (Cont'd)

1. Clean the input shaft thoroughly and dry with compressed air.
2. Blow compressed air through all lube passages in the input shaft (See Figure 89).
3. Install new butt-cut sealing rings on the input shaft, as shown in Figure 89.
4. Set the completed input shaft aside for the final assembly process.

Internal Wiring Harness'

1. Inspect all internal wiring harness components for any wear and/or damage (See Figure 90).
2. Install new "O" ring seal on the "pass-thru" connector, as shown in Figure 90, and lube with a small amount of Trans-Jel®.
3. Set the wiring harness' aside for final assembly.

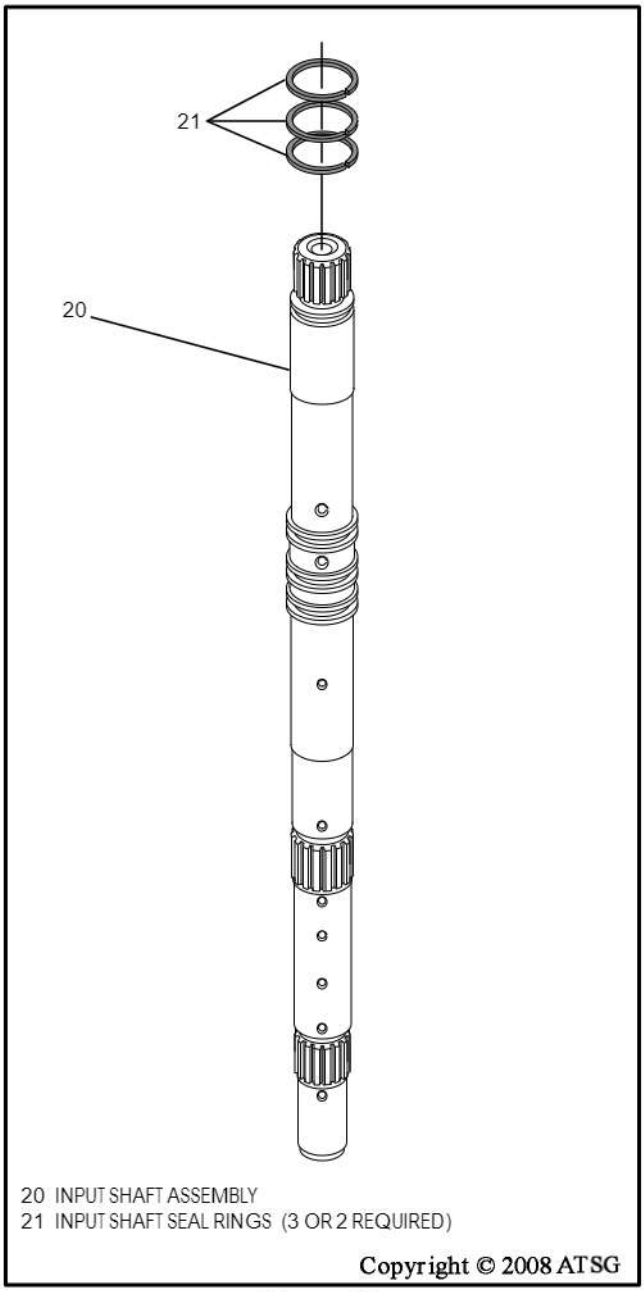

Figure 89

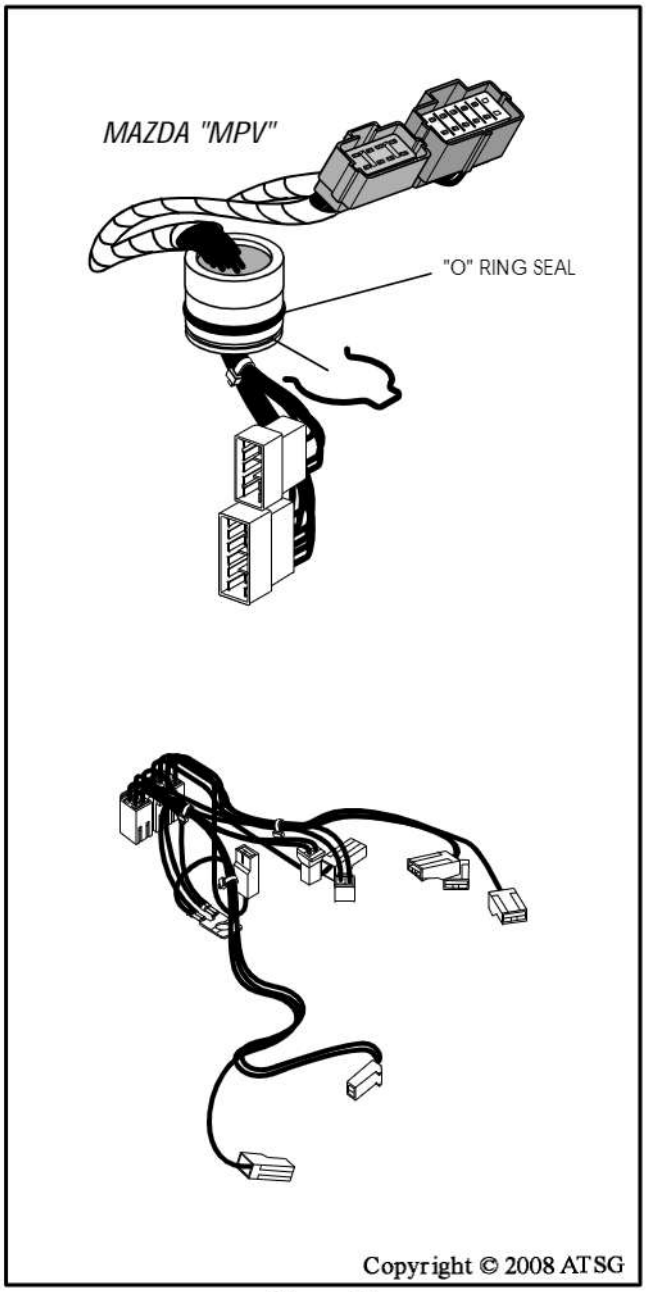

Figure 90

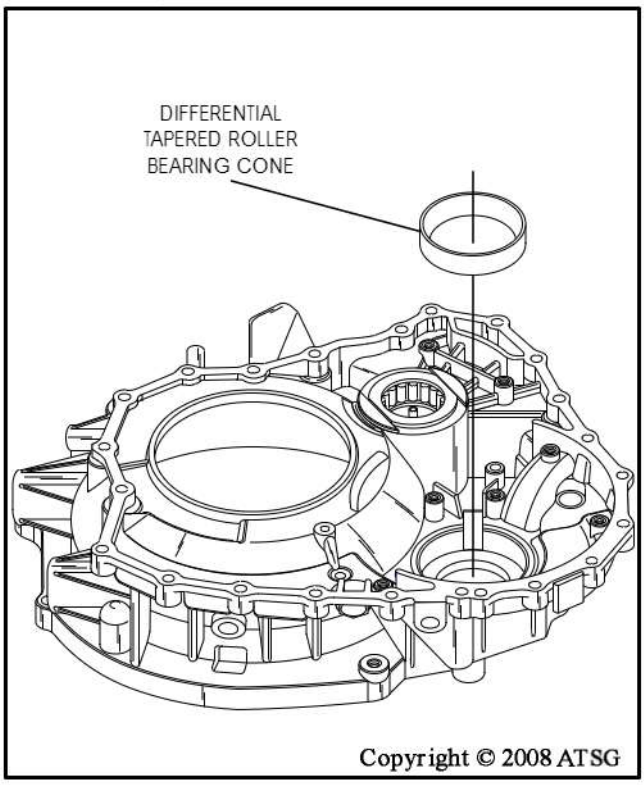

Figure 91

COMPONENT REBUILD (CONT'D)

Torque Converter Housing

1. Clean all converter housing parts thoroughly and dry with compressed air.
2. Inspect all converter housing parts thoroughly for any wear and/or damage.
3. Install new differential tapered roller bearing cone, if necessary, as shown in Figure 91.
4. Install the converter housing oil pipe, as shown in Figure 92, if it was removed.
5. Install the oil baffle, as shown in Figure 93, if it was removed.

Continued on Page 54

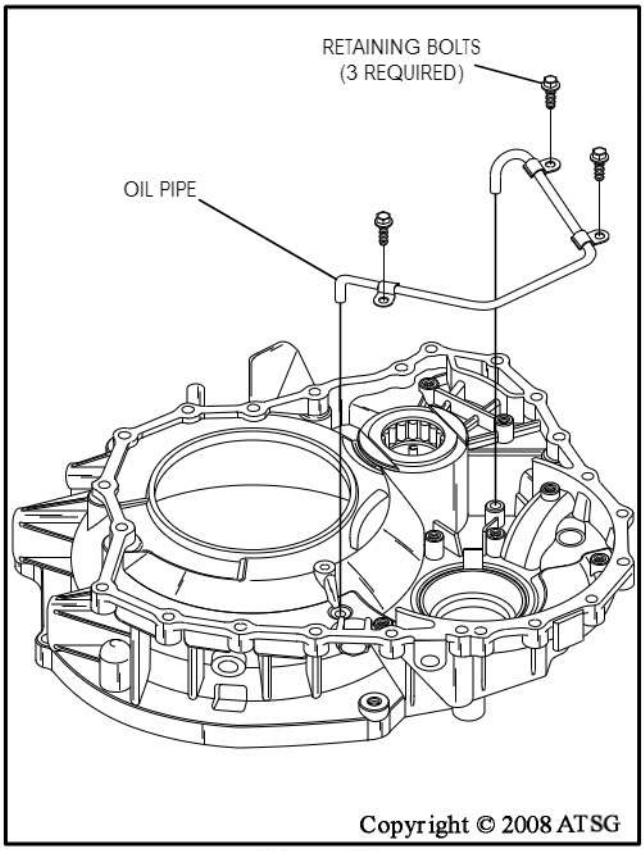

Figure 92

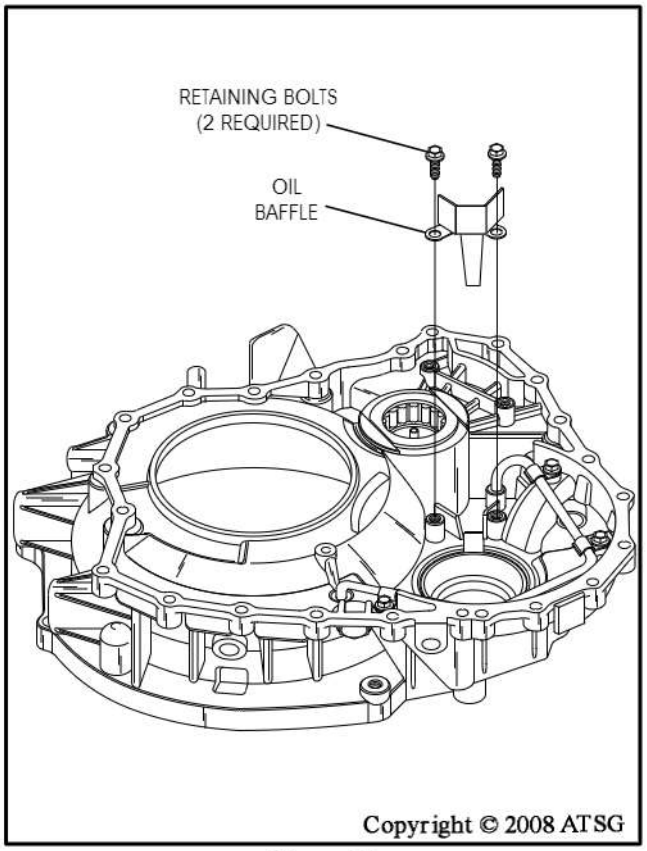

Figure 93

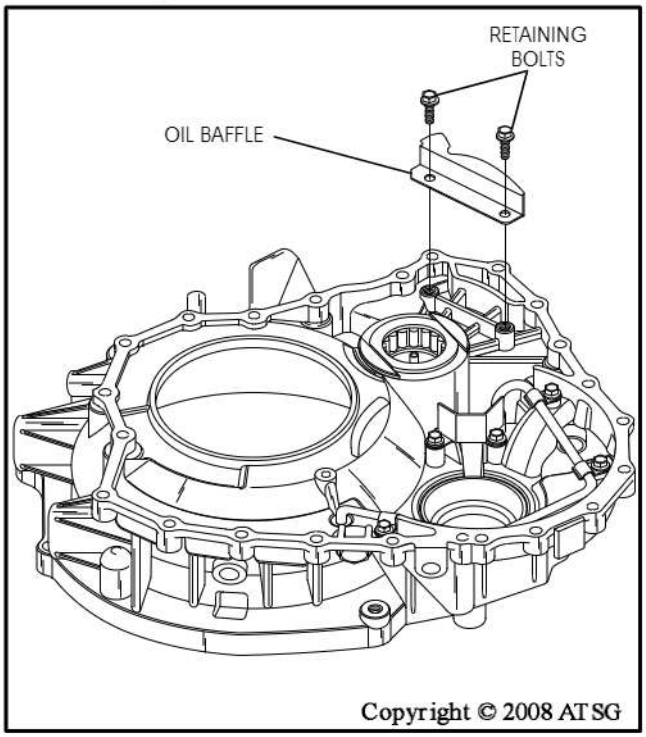

Figure 94

COMPONENT REBUILD (CONT'D)

Torque Converter Housing

6. Install the oil baffle, as shown in Figure 94, if it was removed.
7. Torque all of the oil pipe and oil baffle bolts just installed to 9 N·m (80 in.lb.), as shown in Figure 95.
8. Install axle seal into the converter housing, as shown in Figure 96, using the proper driver.
9. Set completed converter housing aside for the final assembly process.

Component Rebuild Continued on Page 55

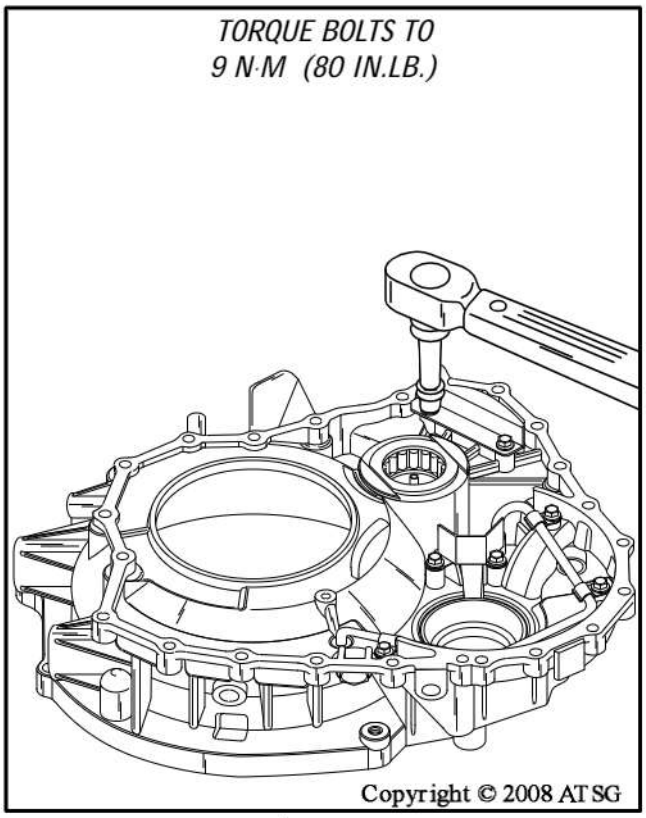

Figure 95

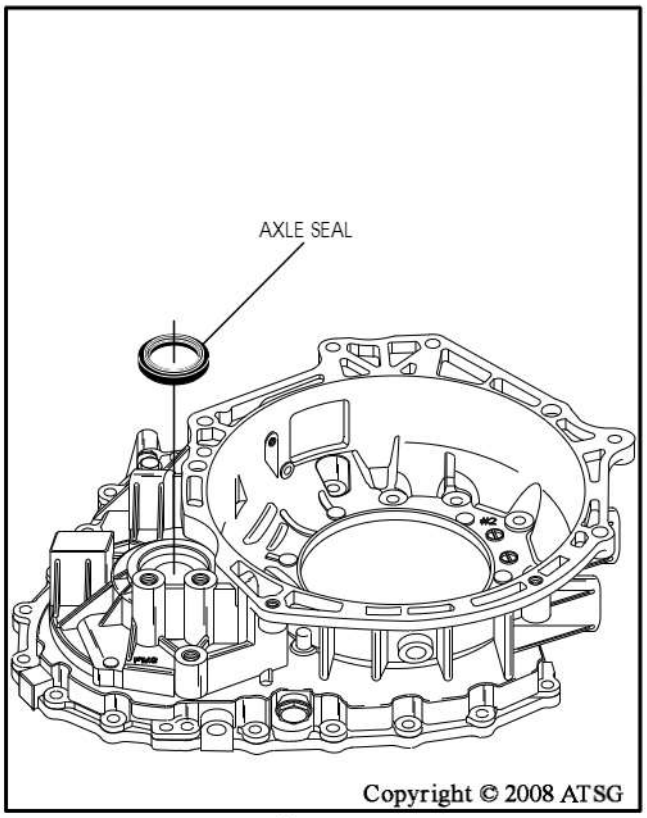

Figure 96

END COVER AND 2-4 CLUTCH PISTON DIFFERENCES

2-4 Brake Clutch Piston/End Cover

There are currently two different 2-4 Brake Clutch Pistons, that are different only on the inside diameter, as shown in Figure 98. You will need a dial caliper capable of measuring 6 plus inches.

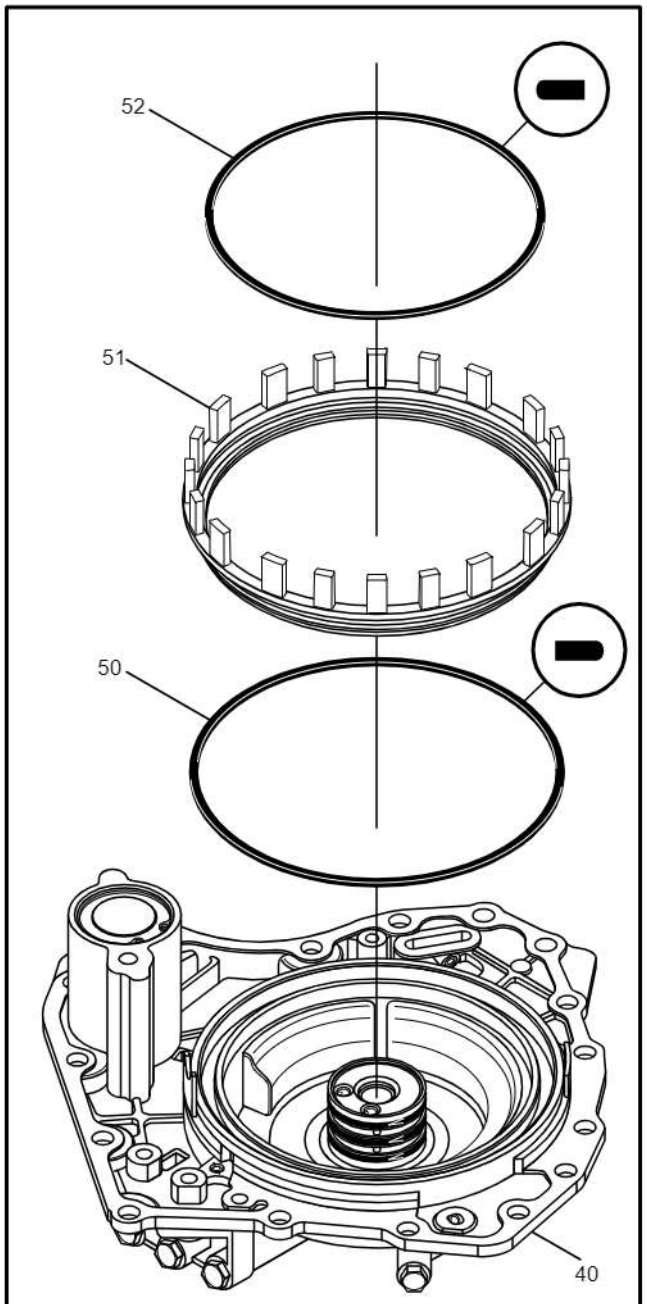

40 TRANSAXLE END COVER
50 2-4 BRAKE CLUTCH PISTON OUTER SEAL
51 2-4 BRAKE CLUTCH PISTON
52 2-4 BRAKE CLUTCH PISTON INNER SEAL

Copyright © 2008 ATSG

Figure 97

2-4 Brake Clutch Piston/End Cover (Cont'd)

Currently we have confirmed it only in the Volkswagen Sharan, but we have suspicion that it may be in other models as well. It is not known whether it is strictly model differences or a model year change, but we do know that it is out there. Obviously this would also affect the inside diameter of the piston area in the end cover, also shown in Figure 98. The smaller inside diameter piston would create a larger surface area for the 2-4 clutch apply fluid to work with. The smaller inside diameter piston cannot be installed in the cover for the larger diameter piston You can go the other way very easily, but you will not like the result. ***Ensure that you use extra care if replacement parts are needed for this area.***

Continued on Page 56

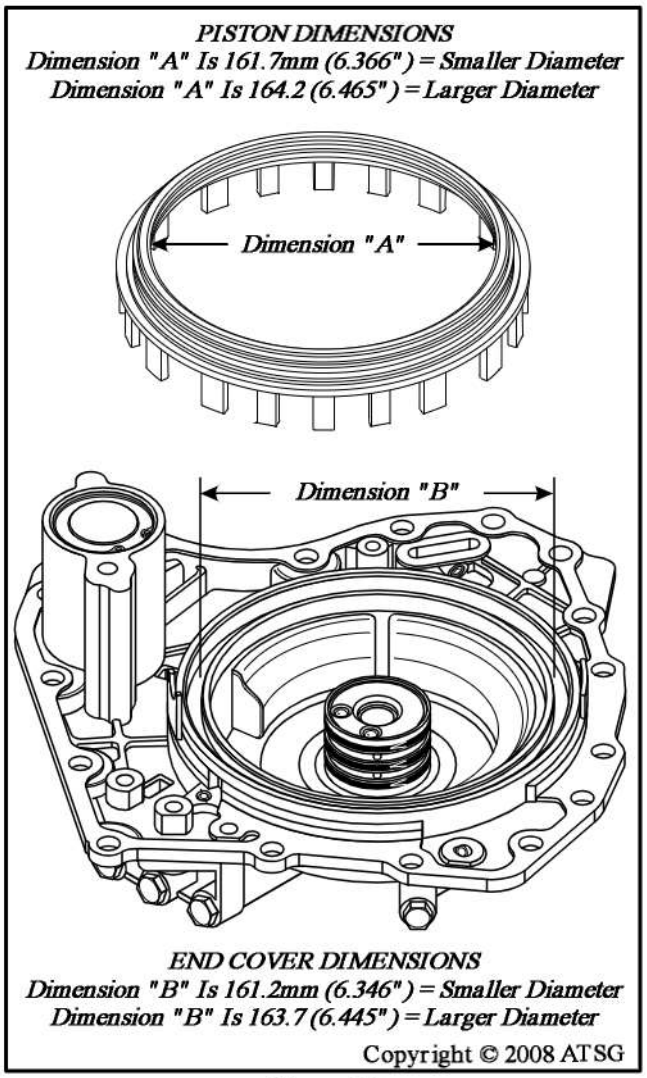

Copyright © 2008 ATSG

Figure 98

COMPONENT REBUILD (CONT'D)

Transaxle End Cover

1. Disassemble the end cover using Figure 99 as a guide.
2. Clean all end cover parts thoroughly and dry with compressed air.
3. Inspect all end cover parts thoroughly for any wear and/or damage.
4. Install two new scarf cut seals on the 2-4 accummulator piston, as shown in Figure 99, and lube with small amount of Trans-Jel®.
5. Install 2-4 accummulator piston into end cover bore, as shown in Figure 99.
6. Install 2-4 accumulator spring in the piston, as shown in Figure 99
7. Install new "O" ring seal on 2-4 accummulator cover, as shown in Figure 99, and lube with a small amount of Trans-Jel®.
8. Install accummulator cover, compress cover and install snap ring, as shown in Figure 99.

Continued on Page 57

TRANSAXLE END COVER EXPLODED VIEW

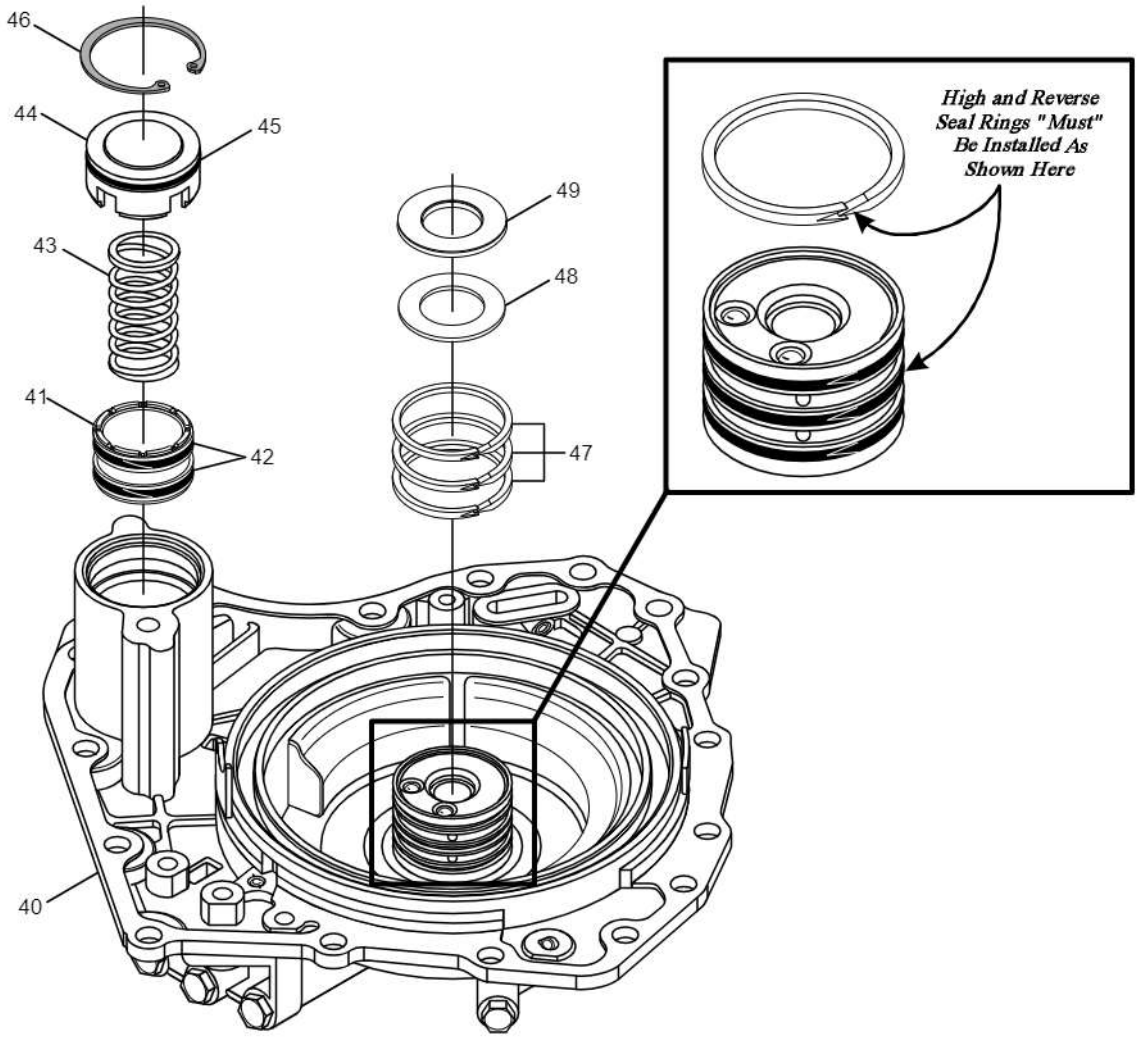

40 TRANSAXLE END COVER
41 2-4 BRAKE ACCUMMULATOR PISTON
42 2-4 BRAKE ACCUMMULATOR PISTON SEALS (2 REQUIRED)
43 2-4 BRAKE ACCUMMULATOR PISTON RETURN SPRING
44 2-4 BRAKE ACCUMMULATOR COVER
45 2-4 BRAKE ACCUMMULATOR COVER "O" RING SEAL
46 2-4 BRAKE ACCUMMULATOR COVER SNAP RING
47 END COVER SEALING RINGS (3 REQUIRED)
48 END COVER TO REAR BEARING "SELECTIVE" THRUST WASHER
49 END COVER TO REVERSE CLUTCH HOUSING THRUST BEARING

Copyright © 2008 ATSG

Figure 99

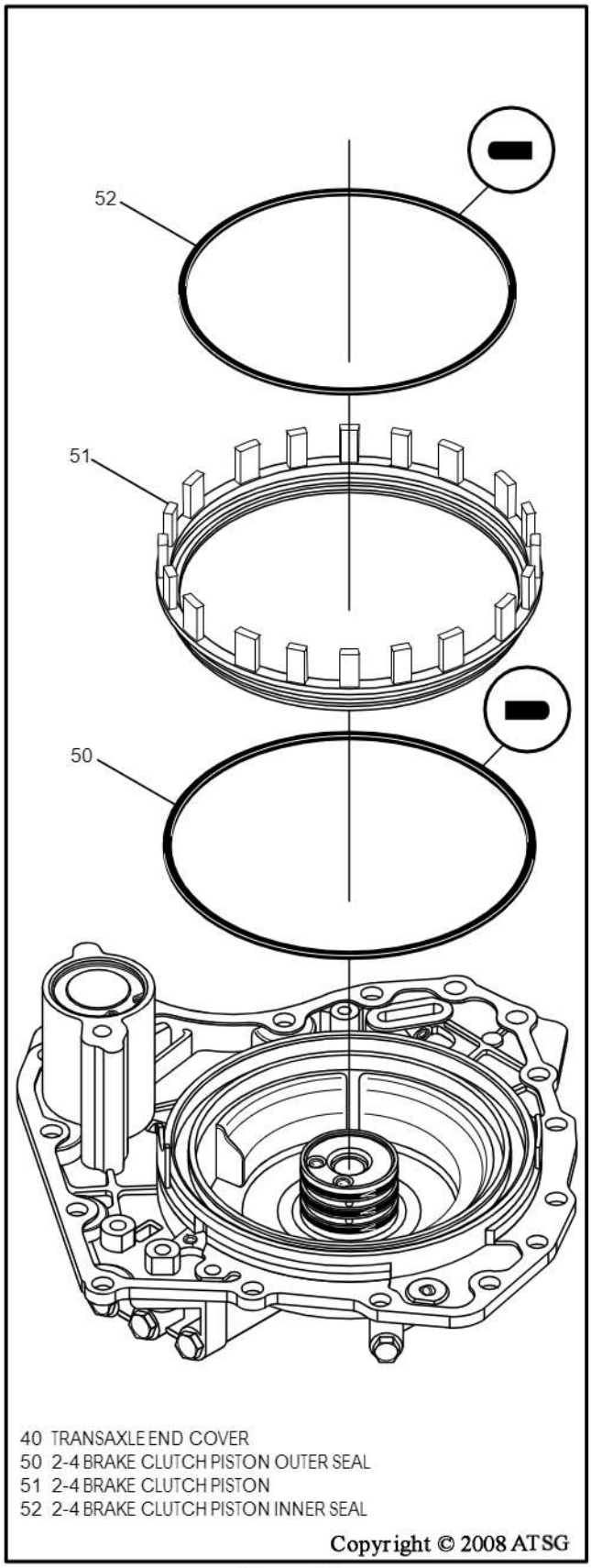

Figure 100

Transaxle End Cover (Cont'd)

9. Install the "V" cut sealing rings onto the end cover support ***exactly*** as shown in Figure 99.

   Caution: Fluid is fed through the end cover to apply the high clutch and the reverse clutch, which are both located in the reverse clutch housing. The sealing rings for the high/reverse clutch are Teflon® and one end has a point like an "arrow", and the other end is cut out the inverse of an arrow, like a "V", as shown in Figure 99. These sealing rings are directional, and when installed correctly, the point of the "arrow" is to the right and the "V" is to the left as shown in Figure 99.

10. Lubricate "V" cut seals with a small amount of Trans-Jel®.
11. Install new outer "D" ring seal onto 2-4 brake clutch piston, as shown in Figure 100, and lube with small amount of Trans-Jel®.
12. Install new inner "D" ring seal onto 2-4 brake clutch piston, as shown in Figure 100, and lube with small amount of Trans-Jel®.

    Note: Read the precautions of the different size 2-4 clutch pistons on Page 55, as this affects the size of inner seal.

13. Install the completed 2-4 brake clutch piston in the end cover as shown in Figure 100.
14. Set the completed end cover aside for the final assembly process (See Figure 101).

Component Rebuild
Continued on Page 58

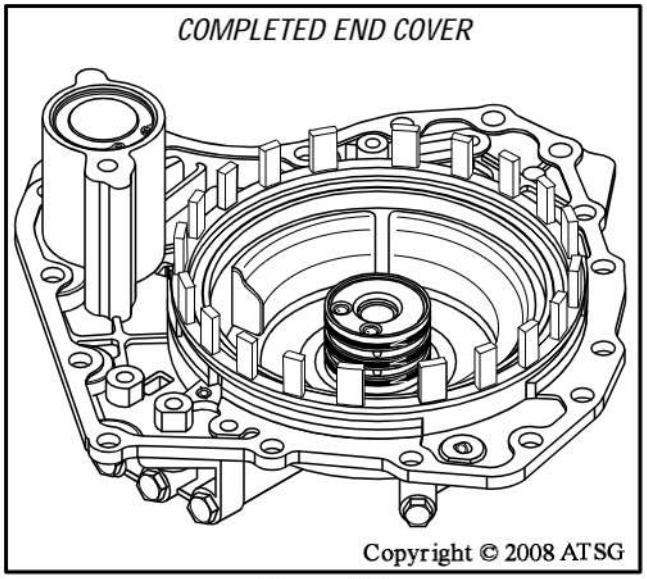

Figure 101

COMPONENT REBUILD (CONT'D)

Reduction Carrier Assembly

1. Bend back the "stake" on the retaining nut back using a small punch.
2. Remove the nut using a 1-1/4" socket.
   Note: The differential pinion gear (622) and bearing inner race (623), are pressed onto the reduction carrier shaft.
3. Remove the differential pinion gear and the converter housing bearing inner race using a press.
4. Disassemble the remaining parts of reduction carrier using Figure 102 as a guide.
   Note: "Do Not" remove the reduction carrier internal ring gear from transfer gear unless there is damage, as it is " Very" tough to get back on.
5. Clean all reduction carrier parts thoroughly and dry with compressed air.
6. Inspect all reduction carrier parts thoroughly and replace as necessary.

Continued on Page 59

REDUCTION PLANETARY CARRIER ASSEMBLY EXPLODED VIEW

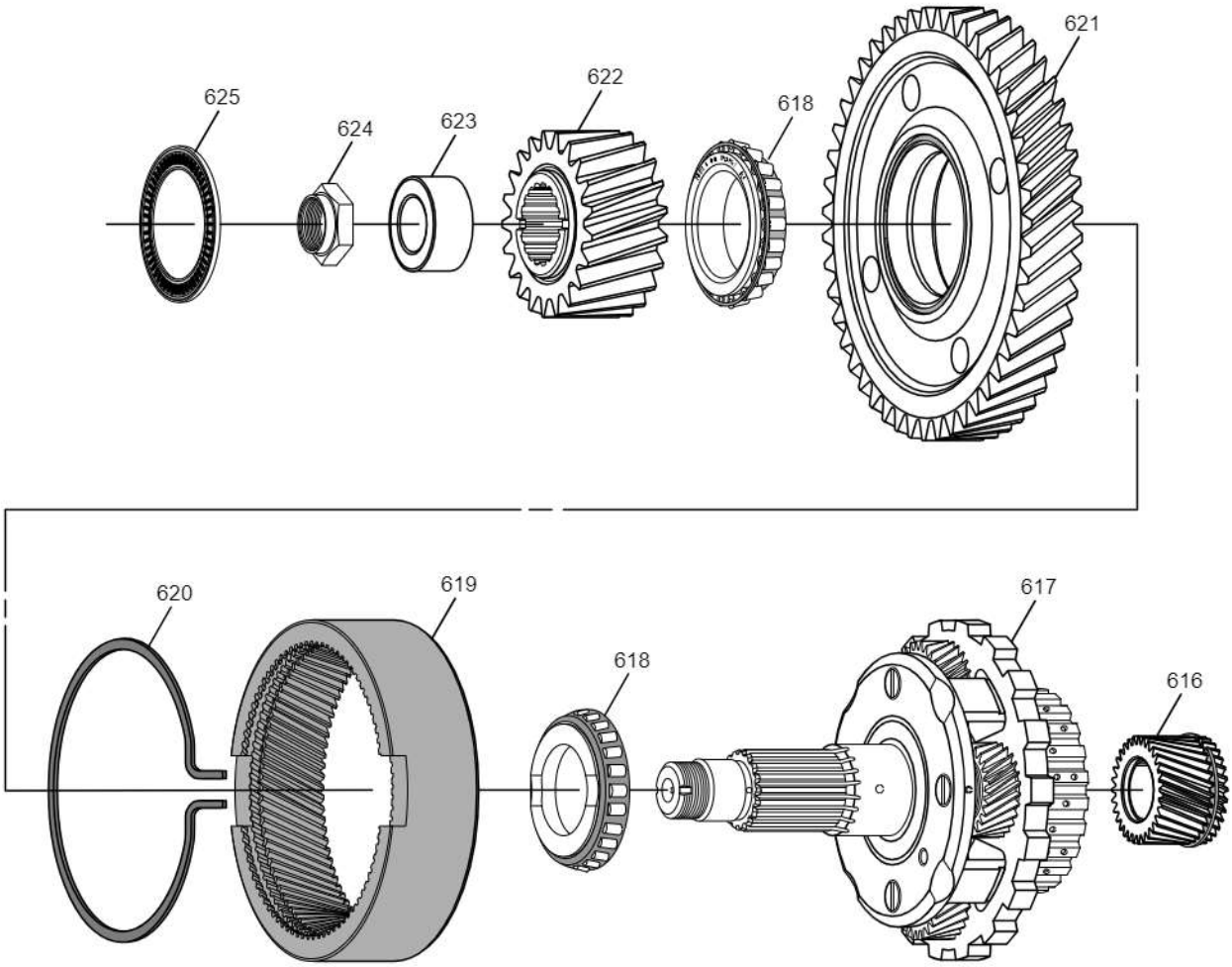

616 REDUCTION SUN GEAR
617 REDUCTION PLANETARY CARRIER AND PARK GEAR ASSEMBLY
618 TAPERED ROLLER BEARINGS (2 REQUIRED)
619 REDUCTION PLANETARY INTERNAL RING GEAR
620 REDUCTION INTERNAL RING GEAR SNAP RING
621 TRANSFER GEAR "B" ASSEMBLY
622 DIFFERENTIAL PINION GEAR
623 CONVERTER HOUSING ROLLER BEARING INNER RACE
624 RETAINING NUT TO SET BEARING PRE-LOAD
625 DIFFERENTIAL PINION GEAR TO COVER THRUST BEARING

Copyright © 2008 ATSG

Figure 102

Reduction Carrier Assembly (Cont'd)

7. Install new tapered roller bearings and cones, as necessary.
   Note: Lubricate all bearings with ATF before installation.
8. Install transfer gear "B" and internal ring gear assembly onto planetary carrier, as shown in Figure 103.
9. Install tapered roller bearing over the shaft, as shown in Figure 104.
10. Install the differential pinion over the shaft, with the grooved side facing up, as shown in Figure 104.
11. Install the converter housing bearing inner race on top of the differential pinion gear, as shown in Figure 104.
12. We will now use the press again to install these parts and set bearing pre-load.

Continued on Page 60

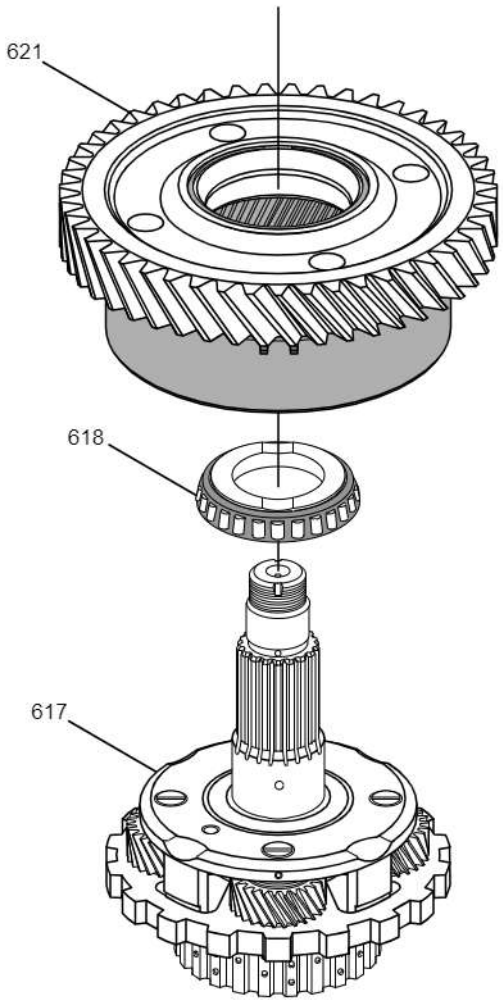

617 REDUCTION PLANETARY CARRIER AND PARK GEAR ASSEMBLY
618 TAPERED ROLLER BEARINGS (2 REQUIRED)
621 TRANSFER GEAR "B" AND RING GEAR ASSEMBLY

Copyright © 2008 ATSG

Figure 103

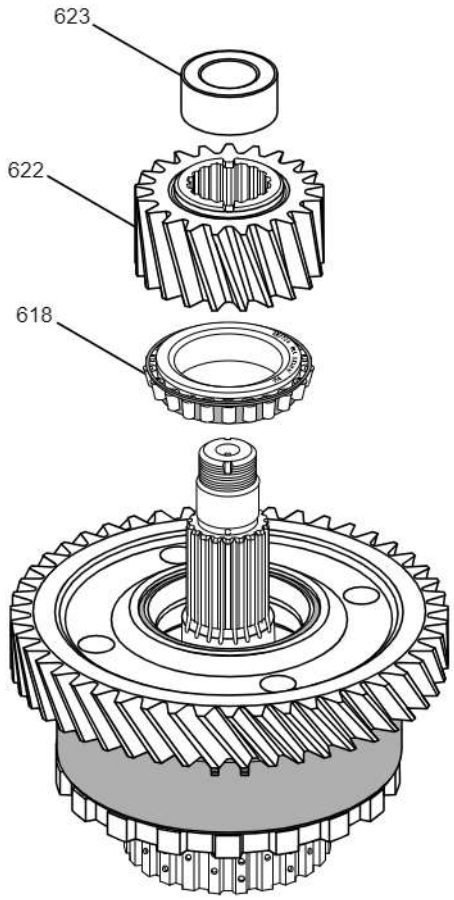

618 TAPERED ROLLER BEARINGS (2 REQUIRED)
622 DIFFERENTIAL PINION GEAR
623 CONVERTER HOUSING ROLLER BEARING INNER RACE

Copyright © 2008 ATSG

Figure 104

Reduction Carrier Assembly (Cont'd)

13. Use a press to install the roller bearing, pinion gear and Conv. housing bearing inner race, as shown in Figure 105, and this is where we will set the roller bearing pre-load. This will require that you release the press several times to check the bearing pre-load.
    Note: Reduction bearing pre-load should be; .060-1.75 N·m (5.3 - 15.5 in.lb.). All bearing pre-load refers to "rotating torque required".
14. Install the nut using a 1-1/4" socket, as shown in Figure 106, and torque the nut to 62 N·m (45 ft.lb.), and "stake" the nut into the groove with a punch.
15. Install differential pinion gear to cover thrust bearing, as shown in Figure 106, and retain with small amount of Trans-Jel®.
16. Set completed reduction carrier assembly aside for the final assembly process, as shown in Figure 107.

Componet Rebuild
Continued on Page 61

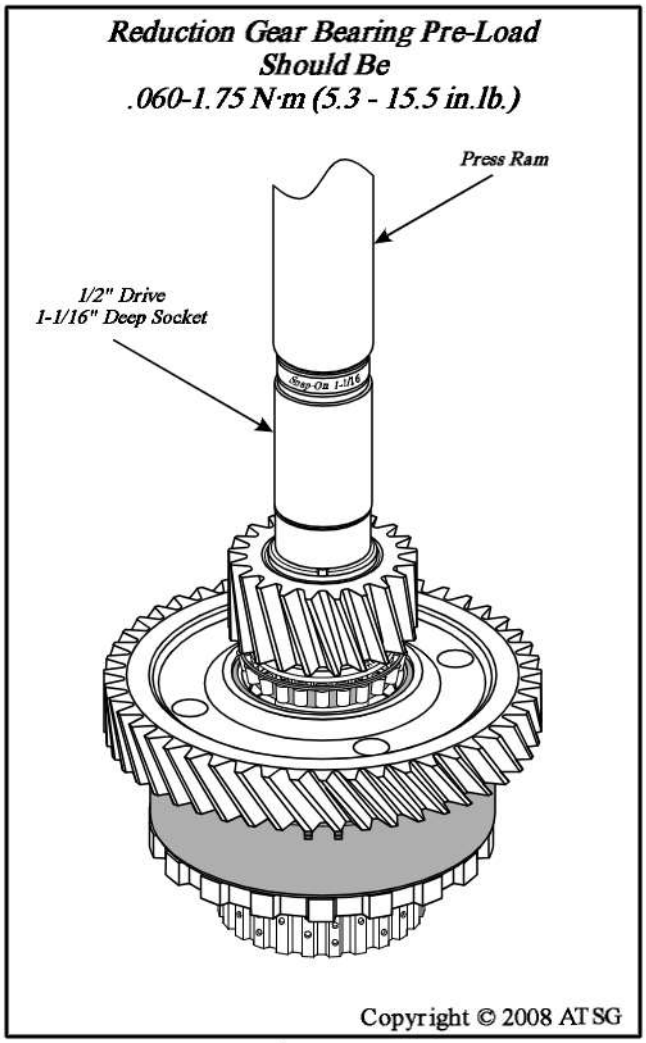

Figure 105

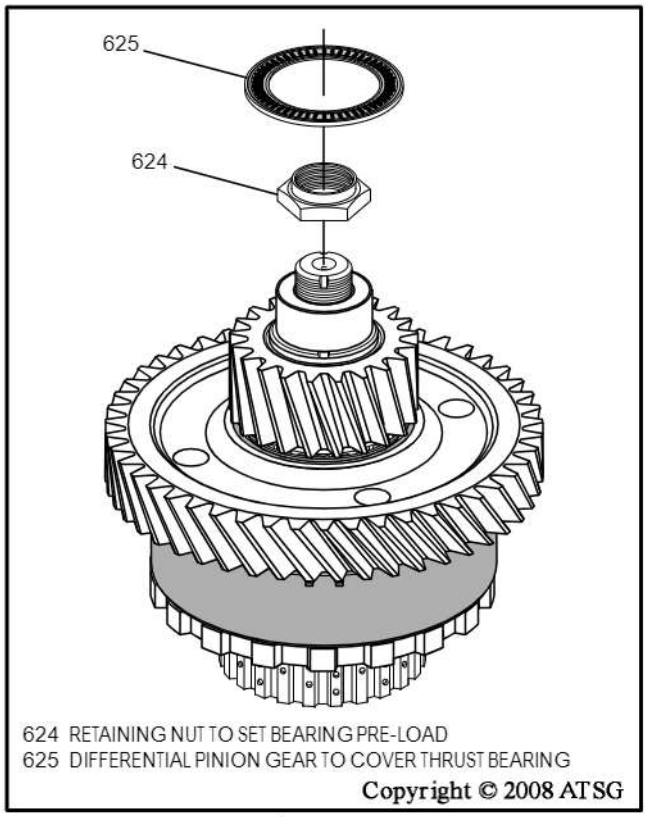

Figure 106

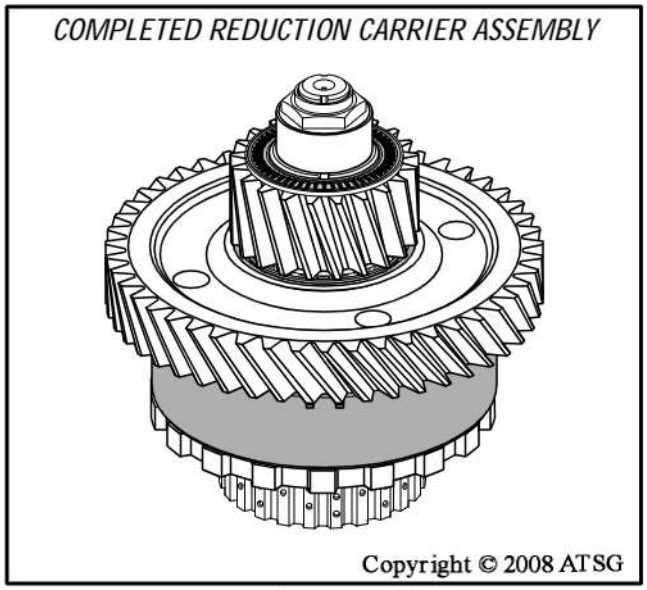

Figure 107

COMPONENT REBUILD (CONT'D)

Planetary Gear Train

1. Clean all planetary gear train parts thoroughly and dry with compressed air.
2. Inspect all planetary gear train parts thoroughly for any wear and/or damage.
3. Disassemble any gear train parts necessary for replacement, using Figure 108 as a guide.
4. There are many things we can do to prepare for the final assembly process that will make final assembly easier.

Continued on Page 62

JF506E PLANETARY GEAR TRAIN EXPLODED VIEW

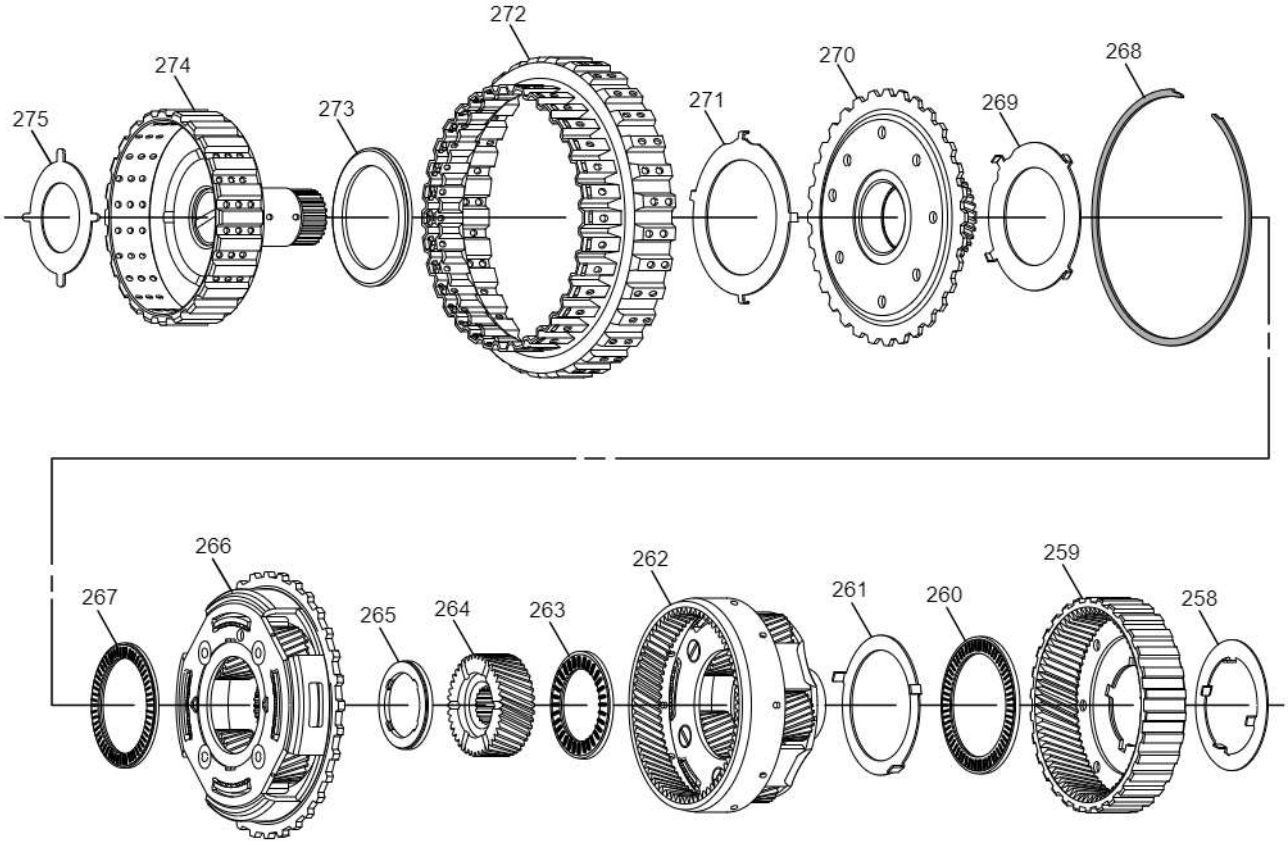

258 RING GEAR TO SUPPORT, THRUST BEARING RACE (NO. 2A)
259 OUTPUT CARRIER INTERNAL RING GEAR/LOW CLUTCH HUB
260 RING GEAR TO OUTPUT CARRIER THRUST BEARING (NO, 3)
261 OUTPUT CARRIER THRUST BEARING RACE (NO. 3A)
262 OUTPUT CARRIER/INPUT INTERNAL RING GEAR ASSEMBLY
263 OUTPUT CARRIER TO SUN GEAR THRUST BEARING (NO. 4)
264 OUTPUT CARRIER SUN GEAR
265 SUN GEAR TO INTPUT CARRIER THRUST BEARING (NO. 5)
266 INPUT CARRIER ASSEMBLY
267 INPUT CARRIER TO SUN GEAR THRUST BEARING (NO. 6)
268 INPUT SUN GEAR TO HUB SNAP RING
269 INPUT SUN GEAR THRUST BEARING RACE (NO. 6A)
270 INPUT SUN GEAR
271 SUN GEAR TO CLUTCH HUB THRUST BEARING RACE (NO.7A)
272 REVERSE AND 2-4 BRAKE CLUTCH HUB
273 HIGH CLUTCH HUB TO SUN GEAR THRUST BEARING (NO. 7)
274 HIGH CLUTCH HUB AND SHAFT
275 HIGH CLUTCH HUB THRUST BEARING RACE (NO. 8A)

Copyright © 2008 ATSG

Figure 108

Planetary Gear Train (Cont'd)

5. Install number 2A thrust bearing race onto the output ring gear and low clutch hub, as shown in Figure 109, and retain with a small amount of Trans-Jel®.
   Note: This thrust bearing race fits in only one direction. Ensure it is flat on hub.
6. Turn clutch hub over and install the number 3 thrust bearing into the clutch hub, as shown in Figure 109, and retain with a small amount of Trans-Jel®.
7. Install number 3A thrust bearing race on back side of output carrier, as shown in Figure 110, and retain with small amount of Trans-Jel®.
   Note: This thrust bearing race fits in only one direction. Ensure it is flat on carrier.
8. Install number 4 thrust bearing in front side of output carrier, as shown in Figure 110, retain with a small amount of Trans-Jel®.
9. Install number 6 thrust bearing on input carrier, as shown in Figure 111, and retain with small amount of Trans-Jel®.
10. Assemble the input sun gear to reverse and 2-4 brake clutch hub, as shown in Figure 112, and install snap ring.

Continued on Page 63

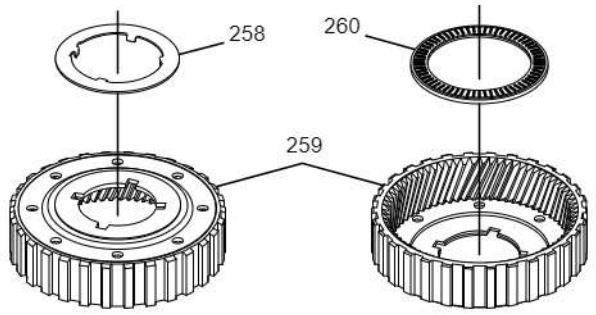

258 RING GEAR TO SUPPORT, THRUST BEARING RACE (NO. 2A)
259 OUTPUT CARRIER INTERNAL RING GEAR/LOW CLUTCH HUB
260 RING GEAR TO OUTPUT CARRIER THRUST BEARING (NO, 3)

Copyright © 2008 ATSG

Figure 109

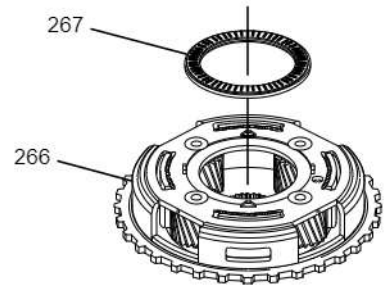

266 INPUT CARRIER ASSEMBLY
267 INPUT CARRIER TO SUN GEAR THRUST BEARING (NO. 6)

Copyright © 2008 ATSG

Figure 111

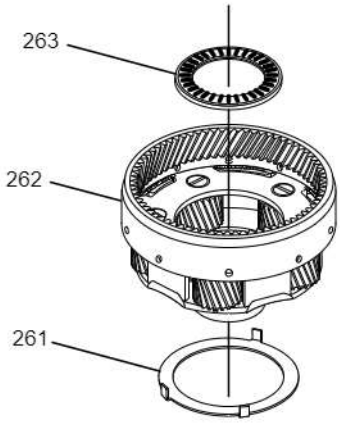

261 OUTPUT CARRIER THRUST BEARING RACE (NO. 3A)
262 OUTPUT CARRIER/INPUT INTERNAL RING GEAR ASSEMBLY
263 OUTPUT CARRIER TO SUN GEAR THRUST BEARING (NO. 4)

Copyright © 2008 ATSG

Figure 110

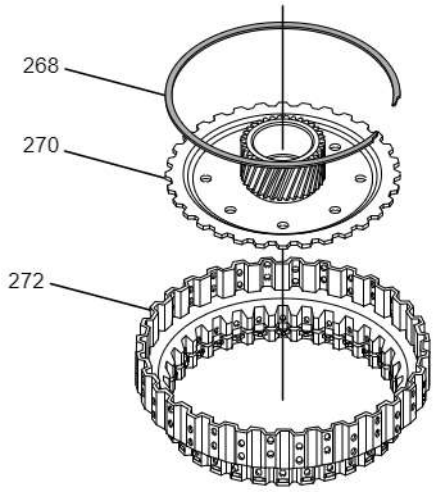

268 INPUT SUN GEAR TO HUB SNAP RING
270 INPUT SUN GEAR
272 REVERSE AND 2-4 BRAKE CLUTCH HUB

Copyright © 2008 ATSG

Figure 112

Planetary Gear Train (Cont'd)

11. Install number 6A thrust bearing race onto the input sun gear and hub, as shown in Figure 113 and retain with small amount of Trans-Jel®. ***Note: This thrust bearing race fits in only one direction. Ensure it is flat on sun gear.***
12. Install number 7A thrust bearing race onto the input sun gear and hub, as shown in Figure 113 and retain with small amount of Trans-Jel®. ***Note: This thrust bearing race fits in only one direction. Ensure it is flat on sun gear.***
13. Install number 8A thrust bearing race onto the high clutch hub, as shown in Figure 114, and retain with small amount of Trans-Jel®.
14. Install number 7 thrust bearing onto back side of high clutch hub, as shown in Figure 114, and retain with small amount of Trans-Jel®.
15. Set all of the pre-assembled gear train parts aside for the final assembly process.

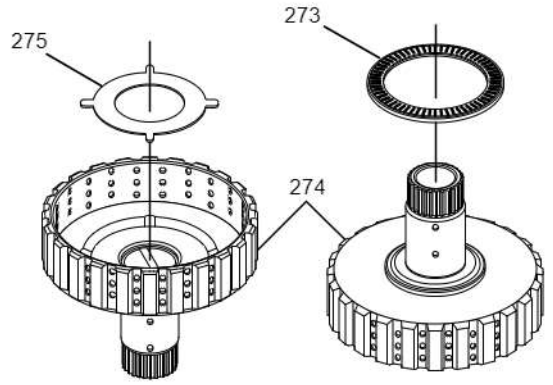

273 HIGH CLUTCH HUB TO SUN GEAR THRUST BEARING (NO. 7)
274 HIGH CLUTCH HUB AND SHAFT
275 HIGH CLUTCH HUB THRUST BEARING RACE (NO. 8A)

Copyright © 2008 ATSG

Figure 114

Component Rebuild
Continued on Page 64

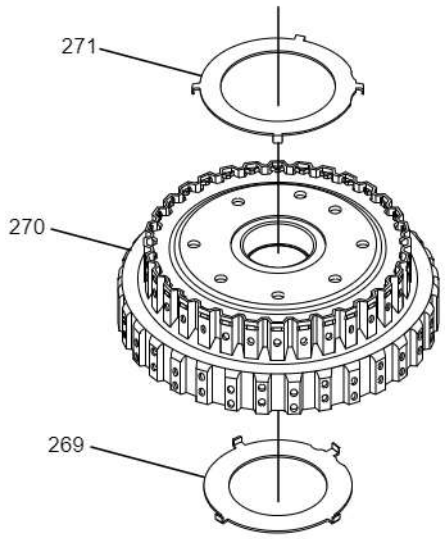

269 INPUT SUN GEAR THRUST BEARING RACE (NO. 6A)
270 INPUT SUN GEAR AND 2-4 BRAKE CLUTCH HUB
271 SUN GEAR TO CLUTCH HUB THRUST BEARING RACE (NO.7A)

Copyright © 2008 ATSG

Figure 113

A very hearty "Thank You" to Frank Kuperman of Phoenix Remanufactured Transmissions for supplying us with the transaxles that made this manual possible.

PHXRETRANS
Phoenix Remanufactured Transmissions

(623) 936-1500
7310 W. Roosevelt #26
Phoenix, AZ 85043
www. phoenixhardparts.com

DIRECT CLUTCH HOUSING EXPLODED VIEW

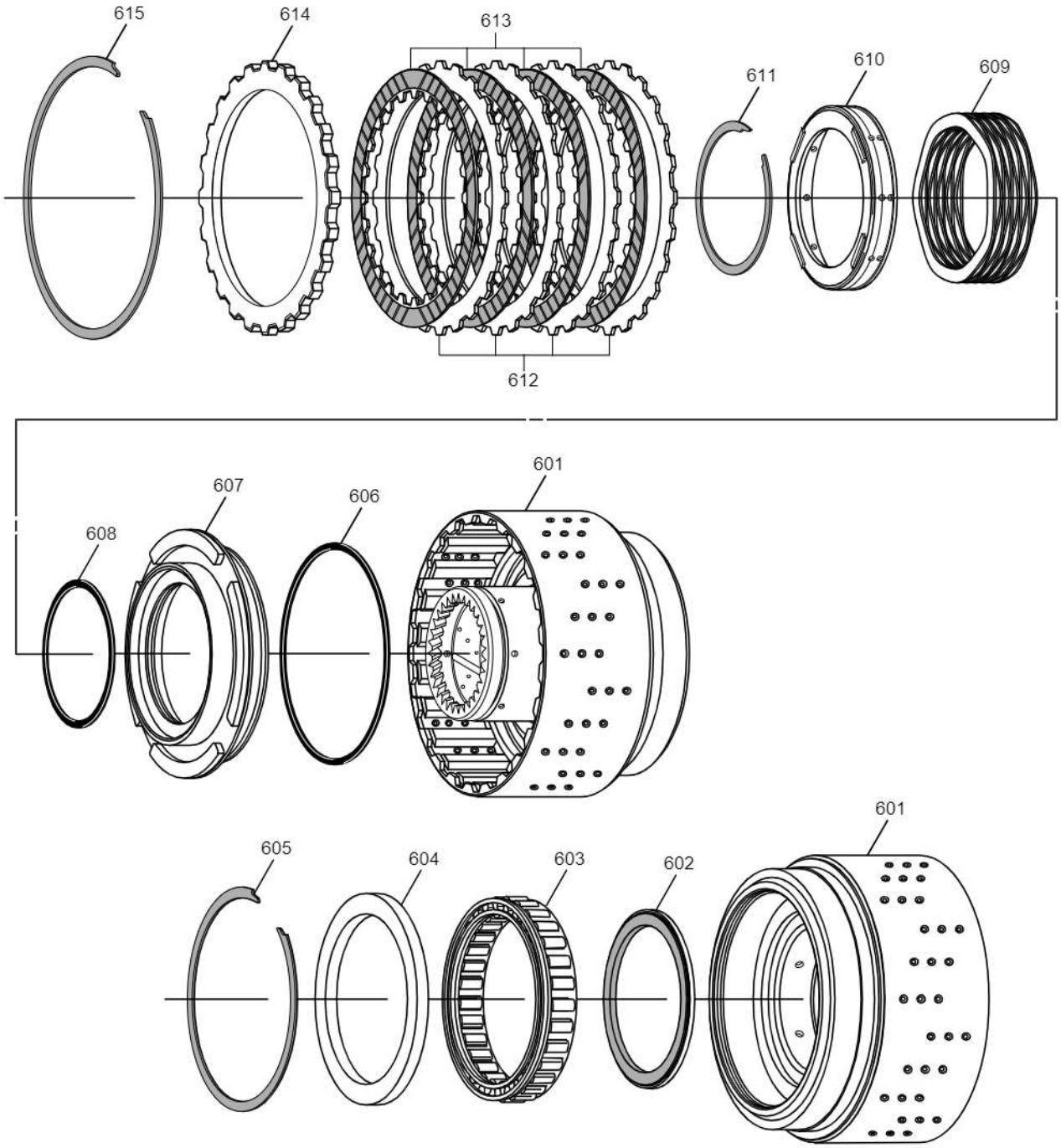

601 DIRECT CLUTCH HOUSING
602 DIRECT CLUTCH HOUSING THRUST BEARING (NO. 13)
603 REDUCTION SPRAG ASSEMBLY (28 ELEMENT)
604 REDUCTION SPRAG END BEARING
605 REDUCTION SPRAG SNAP RING
606 DIRECT CLUTCH PISTON OUTER SEAL
607 DIRECT CLUTCH PISTON ASSEMBLY
608 DIRECT CLUTCH PISTON INNER SEAL
609 DIRECT CLUTCH PISTON RETURN SPRING
610 DIRECT CLUTCH RETURN SPRING RETAINER
611 DIRECT CLUTCH RETURN SPRING SNAP RING
612 DIRECT CLUTCH STEEL PLATE (4 REQUIRED)
613 DIRECT CLUTCH FRICTION PLATE (4 REQUIRED)
614 DIRECT CLUTCH "SELECTIVE" BACKING PLATE
615 DIRECT CLUTCH BACKING PLATE SNAP RING

Copyright © 2008 ATSG

Figure 115

COMPONENT REBUILD (CONT'D)

Direct Clutch Housing

1. Disassemble the direct clutch housing using Figure 115 as a guide.
2. Clean all direct clutch parts thoroughly and dry with compressed air.
3. Inspect all direct clutch parts thoroughly for any wear and/or damage, replace as necessary.
4. Inspect check ball in the direct clutch piston to ensure the ball is free (Should Rattle).
5. Install a new inner "D" ring seal into groove in piston, as shown in Figure 116.
6. Install a new outer "D" ring seal into groove in piston, as shown in Figure 116, and lube both seals with small amount of Trans-Jel®.
7. Install the piston and seal assembly into direct clutch housing, as shown in Figure 117.
8. Install the direct clutch piston return spring into direct clutch housing, as shown in Figure 117.
9. Install the direct clutch piston return spring retainer on top of the return spring, as shown in Figure 117.
10. Using the proper adapters, compress the return spring and retainer and install the snap ring (See Figure 117).

Continued on Page 66

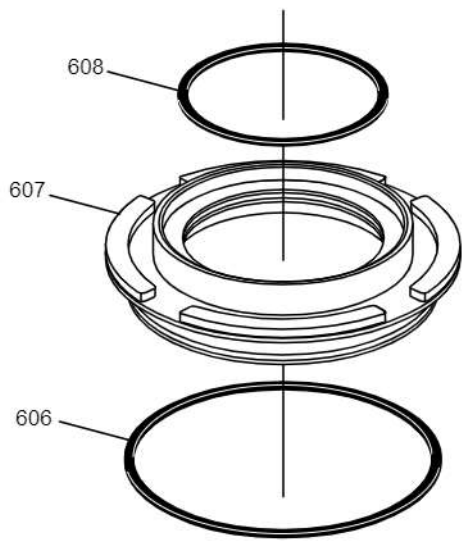

606 DIRECT CLUTCH PISTON OUTER "D" RING SEAL
607 DIRECT CLUTCH PISTON ASSEMBLY
608 DIRECT CLUTCH PISTON INNER "D" RING SEAL

Copyright © 2008 ATSG

Figure 116

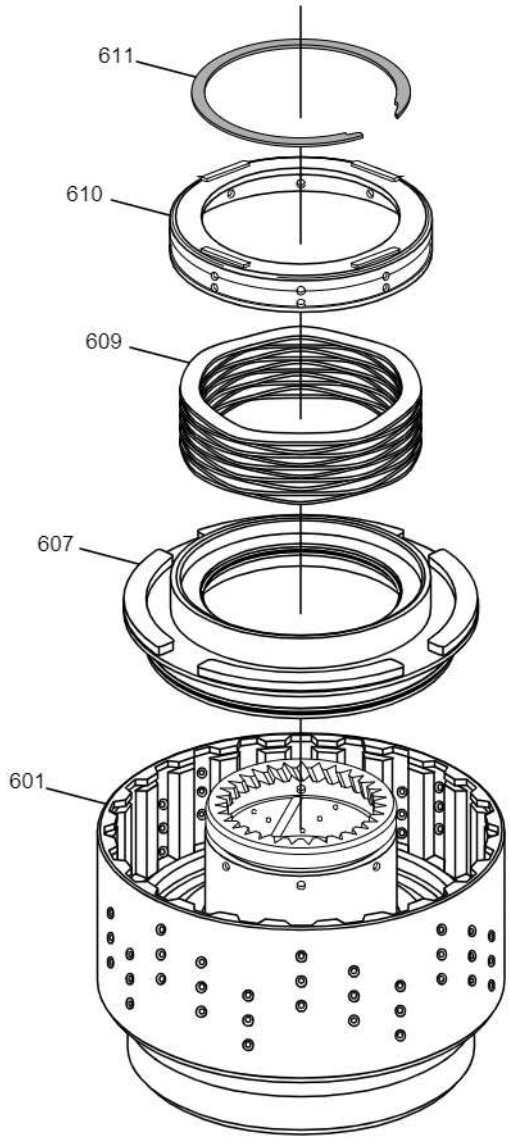

601 DIRECT CLUTCH HOUSING
607 DIRECT CLUTCH PISTON ASSEMBLY
609 DIRECT CLUTCH PISTON RETURN SPRING
610 DIRECT CLUTCH RETURN SPRING RETAINER
611 DIRECT CLUTCH RETURN SPRING SNAP RING

Copyright © 2008 ATSG

Figure 117

Direct Clutch Housing (Cont'd)

11. Ensure that snap ring is fully seated in groove and the retainer, as shown in Figure 118.
12. Install the direct clutch plates beginning with a steel plate and alternating with friction plates, as shown in Figure 119, until you have four of each installed, for the Mazda.
    Note: All clutch plates should be soaked for 30 minutes in the proper fluid for the vehicle before installation.
13. Install the "selective" direct clutch backing plate, as shown in Figure 119, with the flat side facing down.
14. Install the direct clutch backing plate snap ring as shown in Figure 119.
15. Check the direct clutch clearance using a feeler between the backing plate and snap ring, as shown in Figure 120.
    Note: Direct clutch clearance should be; 1.8mm - 2.2mm (.070" - .087").
16. Change "selective" backing plate as necessary using the chart in Figure 120.

Continued on Page 67

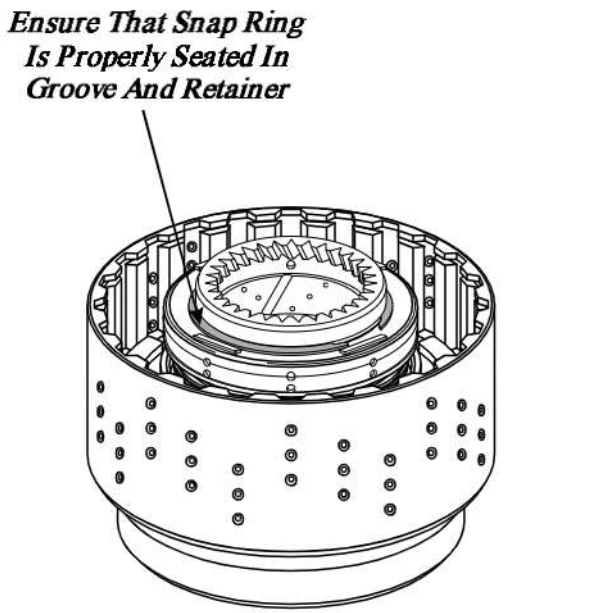

Copyright © 2008 ATSG

Figure 118

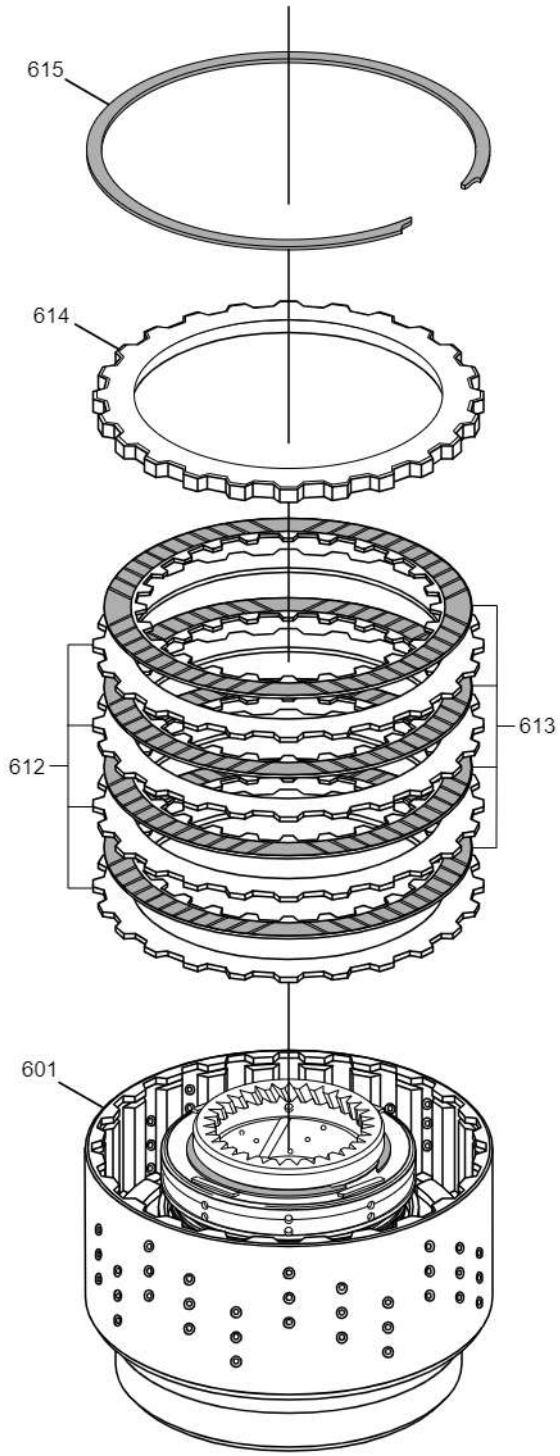

601 DIRECT CLUTCH HOUSING
612 DIRECT CLUTCH STEEL PLATE (4 REQUIRED)
613 DIRECT CLUTCH FRICTION PLATE (4 REQUIRED)
614 DIRECT CLUTCH "SELECTIVE" BACKING PLATE
615 DIRECT CLUTCH BACKING PLATE SNAP RING

Copyright © 2008 ATSG

Figure 119

Direct Clutch Housing (Cont'd)

17. Turn the direct clutch housing over, as shown in Figure 121, and install the number 13 thrust bearing with the black side facing up.
18. Install the reduction sprag assembly into direct clutch housing, with the "lips" facing up, as shown in Figure 121.
19. Install the reduction sprag end bearing into the direct clutch housing, as shown in Figure 121.
    Note: There is only one end bearing used with this sprag.
20. Install the reduction sprag end bearing snap ring, as shown in Figure 121.
21. Set the completed direct clutch housing aside for the final assembly process.
    Note: Check for the proper sprag rotation, as shown in Figure 121.

Component Rebuild
Continued on Page 68

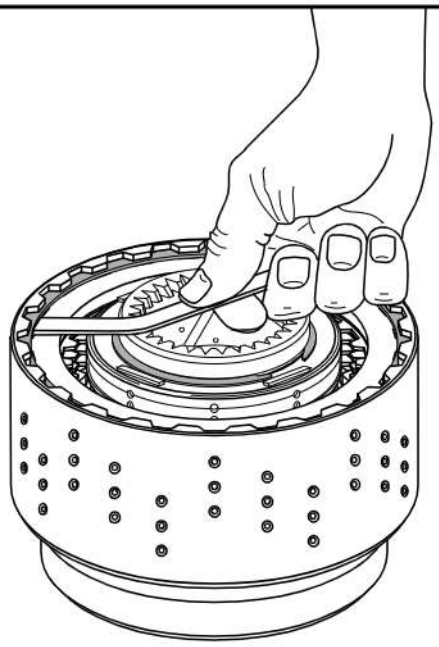

Direct Clutch Clearance Should Be 1.8mm - 2.2mm (.070" - .087")	
Selective Direct Clutch Backing Plates	
4.0mm (.157")	*4.2mm (.165")*
4.4mm (.173")	*4.6mm (.181")*
4.8mm (.189")	*5.0mm (.197")*
	Copyright © 2008 ATSG

Figure 120

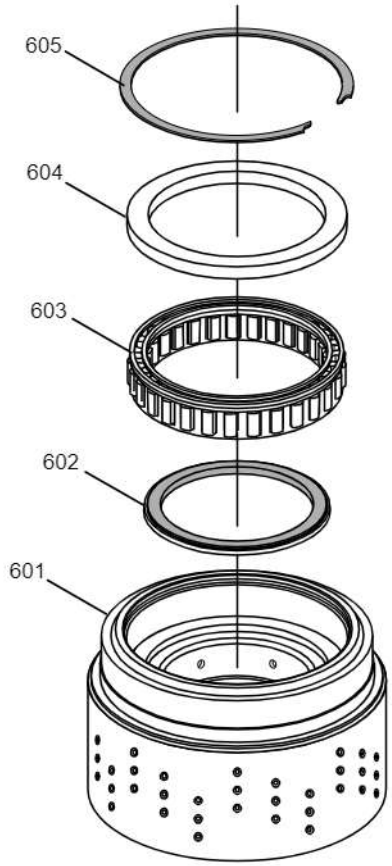

601 DIRECT CLUTCH HOUSING
602 DIRECT CLUTCH HOUSING THRUST BEARING (NO. 13)
603 REDUCTION SPRAG ASSEMBLY (28 ELEMENT)
604 REDUCTION SPRAG END BEARING
605 REDUCTION SPRAG SNAP RING

After Installation Direct Clutch Housing Should Freewheel Counter-Clockwise And Lock Clockwise

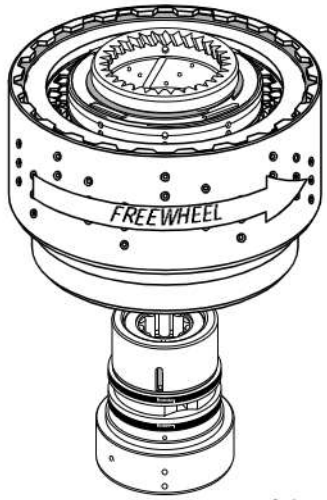

Copyright © 2008 ATSG

Figure 121

LOW/REVERSE CLUTCH EXPLODED VIEW

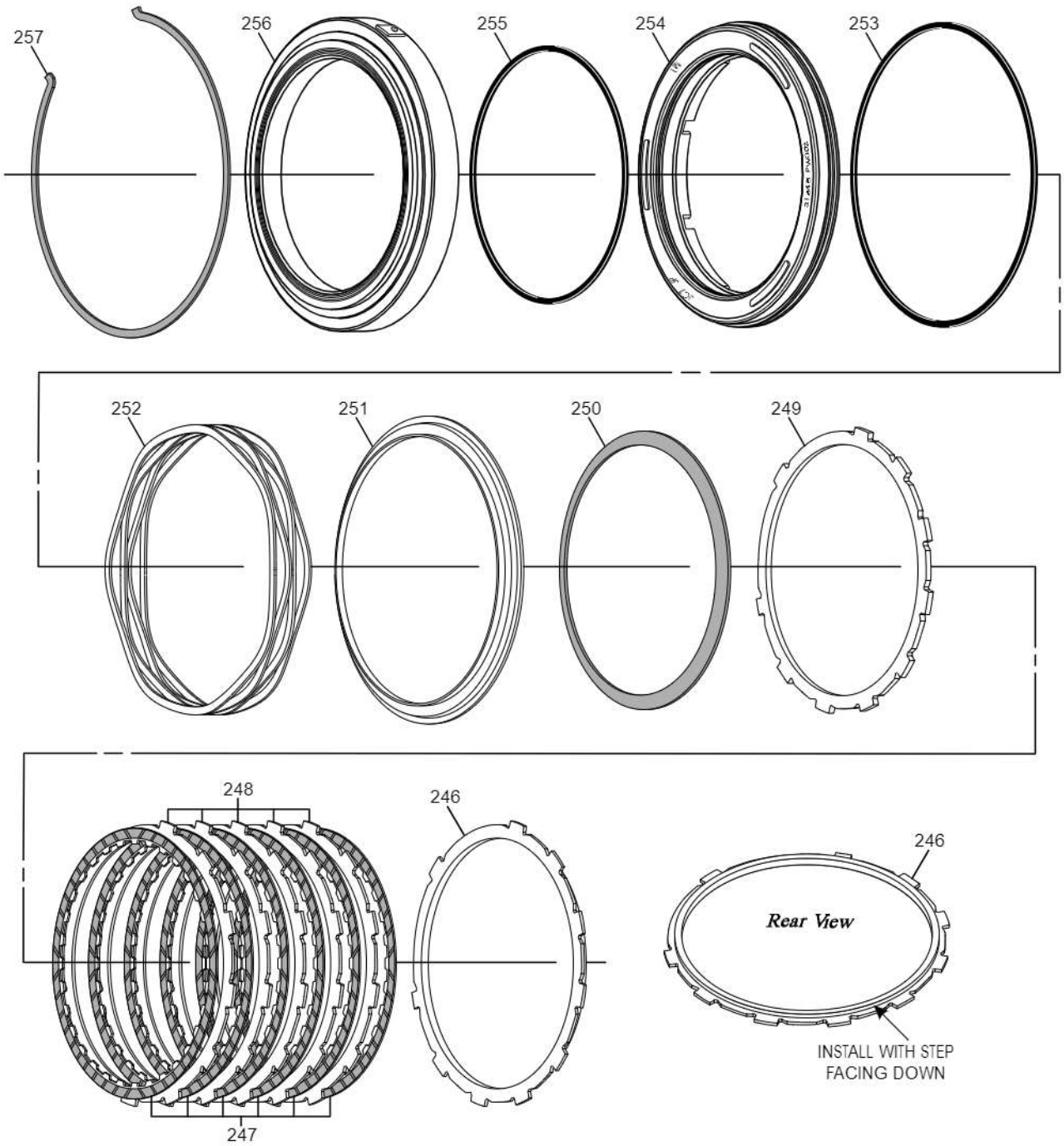

246 LOW/REVERSE CLUTCH BACKING PLATE
247 LOW/REVERSE FRICTION PLATES
248 LOW/REVERSE STEEL PLATES
249 LOW/REVERSE "SELECTIVE" PRESSURE PLATE
250 LOW.REVERSE "CONE" CUSHION PLATE
251 LOW/REVERSE PISTON RETURN SPRING SEAT
252 LOW/REVERSE PISTON RETURN SPRING
253 LOW/REVERSE APPLY PISTON OUTER "D" RING SEAL
254 LOW/REVERSE CLUTCH APPLY PISTON
255 LOW/REVERSE APPLY PISTON INNER "D" RING SEAL
256 LOW/REVERSE CLUTCH PISTON RETAINER
257 LOW/REVERSE PISTON RETAINER SNAP RING

Copyright © 2008 ATSG

Figure 122

COMPONENT REBUILD (CONT'D)

Low And Reverse Clutch

1. Disassemble the low and reverse clutch using Figure 122 as a guide.
2. Clean all low and reverse parts thoroughly and dry with compressed air.
3. Inspect all low and reverse clutch parts for any wear and/or damage, replace as necessary.
4. The only parts to pre-assemble are the low and reverse retainer, apply piston and seals.
5. Place all other low and reverse parts aside for the final assembly process.
   Note: Start the low and reverse friction plates soaking in the proper fluid at this time.
6. Place the low and reverse clutch retainer on a flat work surface, as shown in Figure 123.
7. Install the inner "D" ring seal onto the low and reverse piston, as shown in Figure 123.
8. Install the outer "D" ring seal onto the low and reverse piston, as shown in Figure 123.
9. Lubricate both of the seals with a small amount of Trans-Jel®, and install the piston assembly into the low and reverse retainer, as shown in Figure 123.
10. Set completed low and reverse clutch retainer aside for the final assembly process, as shown in Figure 124.

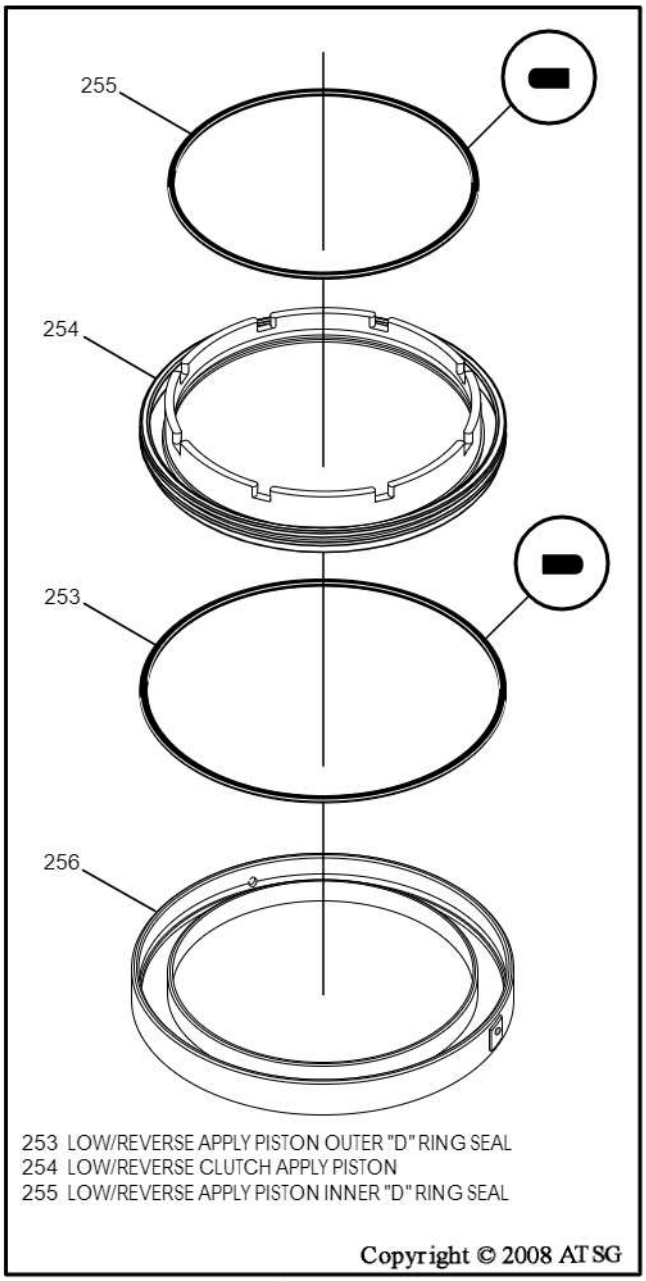

Figure 123

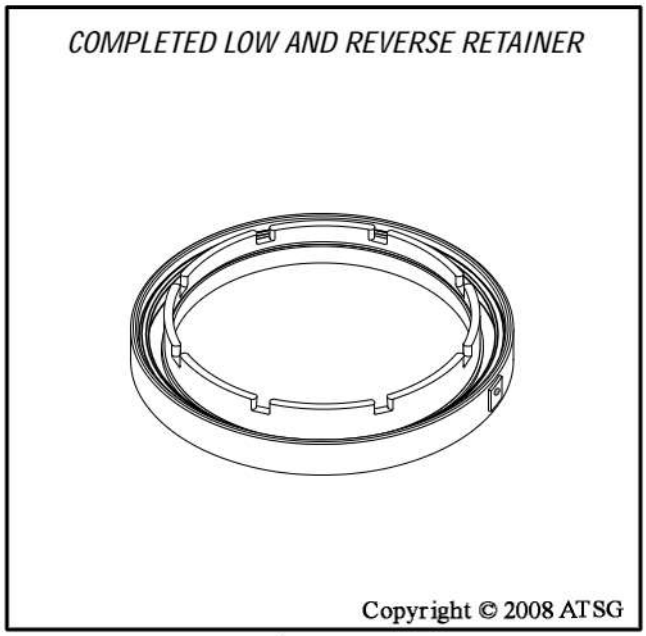

Figure 124

LOW CLUTCH HOUSING EXPLODED VIEW

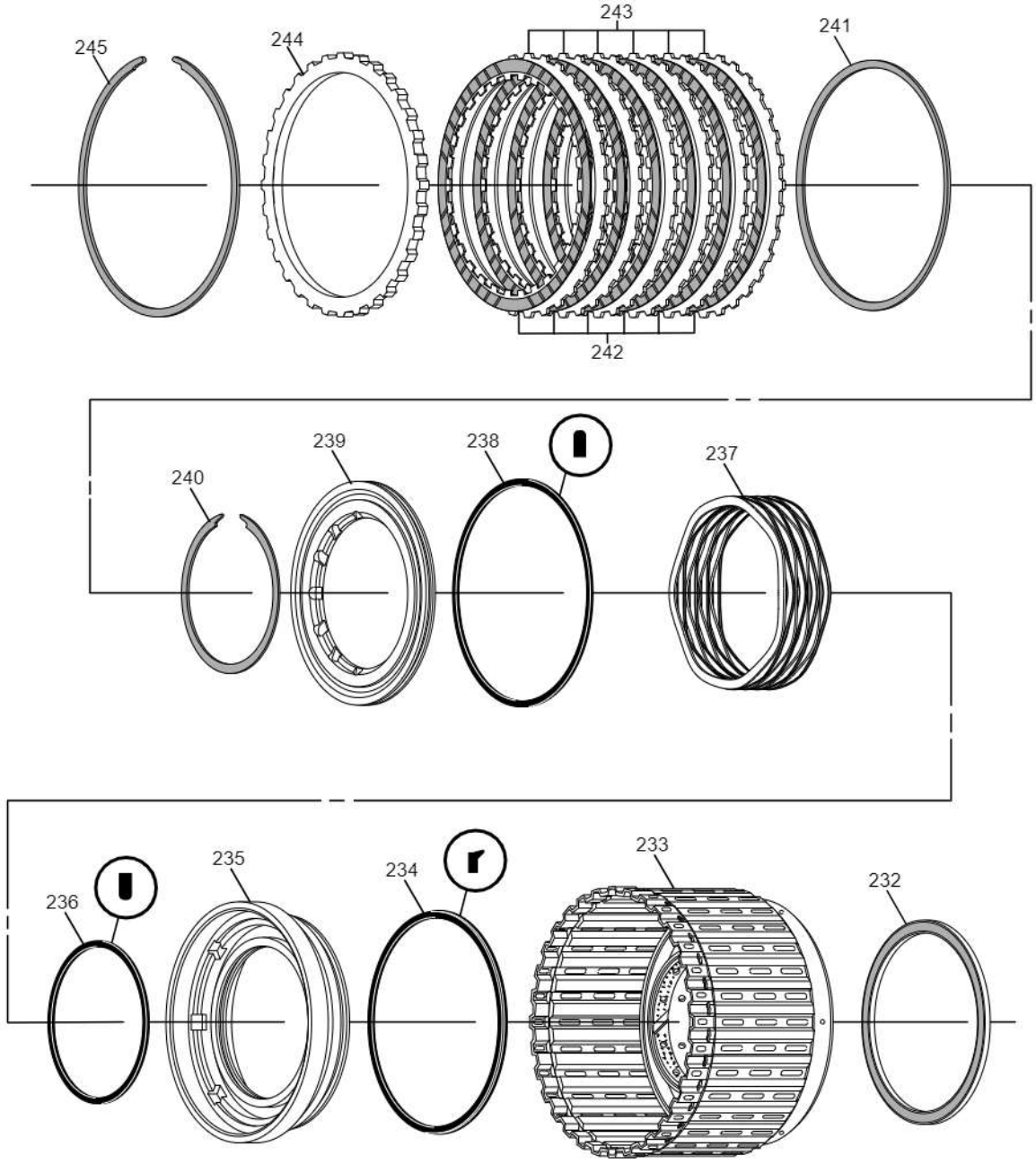

232 LOW CLUTCH HOUSING TO CASE THRUST BEARING (NO. 1)
233 LOW CLUTCH HOUSING
234 LOW CLUTCH PISTON OUTER LIP SEAL
235 LOW CLUTCH PISTON
236 LOW CLUTCH PISTON INNER "D" RING
237 LOW CLUTCH PISTON RETURN SPRING
238 LOW CLUTCH BALANCE PISTON OUTER "D" RING SEAL
239 LOW CLUTCH BALANCE PISTON
240 LOW CLUTCH BALANCE PISTON SNAP RING
241 LOW CLUTCH "CONE" CUSHION SPRING
242 LOW CLUTCH FRICTION PLATES (6 REQUIRED)
243 LOW CLUTCH STEEL PLATES (6 REQUIRED)
244 LOW CLUTCH "SELECTIVE" BACKING PLATE
245 LOW CLUTCH BACKING PLATE SNAP RING

Copyright © 2008 ATSG

Figure 125

COMPONENT REBUILD (CONT'D)

Low Clutch Housing

1. Disassemble the low clutch housing, using Figure 125 as a guide.
2. Clean all low clutch housing parts thoroughly and dry with compressed air.
3. Inspect all low clutch housing parts for any wear and/or damage.
4. Install new "D" ring seal on the low clutch balance piston, as shown in Figure 126, and lube with small amount of Trans-Jel®.
5. Install new inner "D" ring seal on low clutch apply piston, as shown in Figure 127.
6. Install new outer "lip" seal on the low clutch apply piston, as shown in Figure 127, and lube both seals with small amount of Trans-Jel®.
7. Install the low clutch piston and seal assembly into the low clutch housing (See Figure 128).

Continued on Page 72

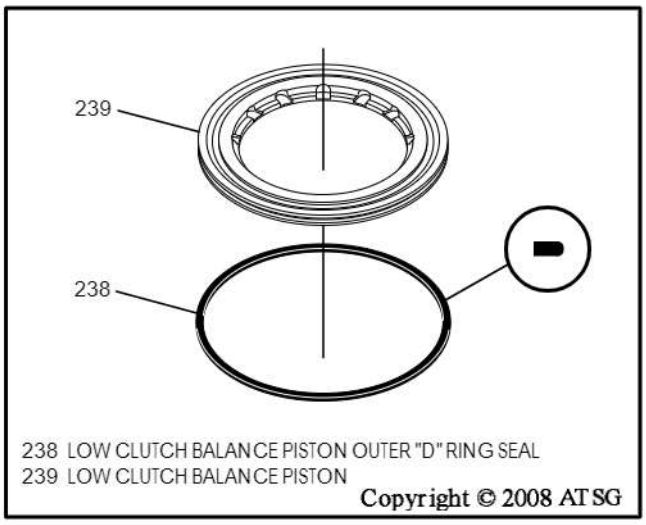

Figure 126

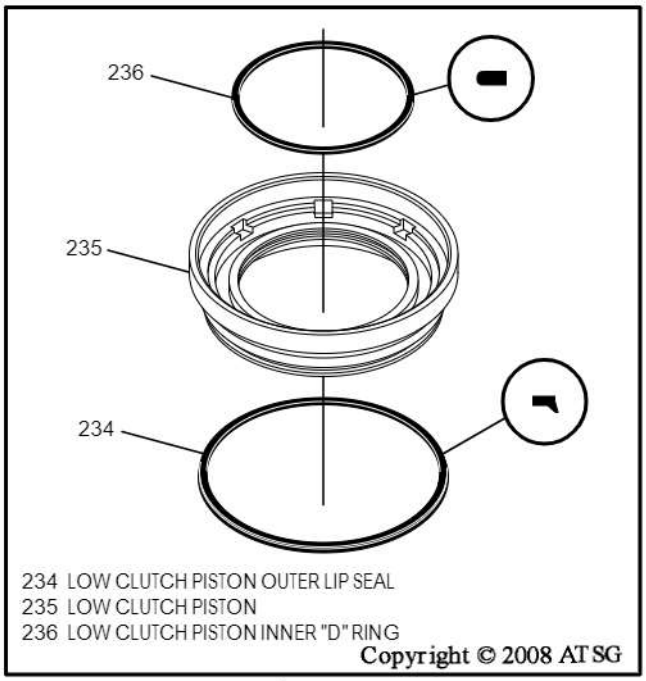

Figure 127

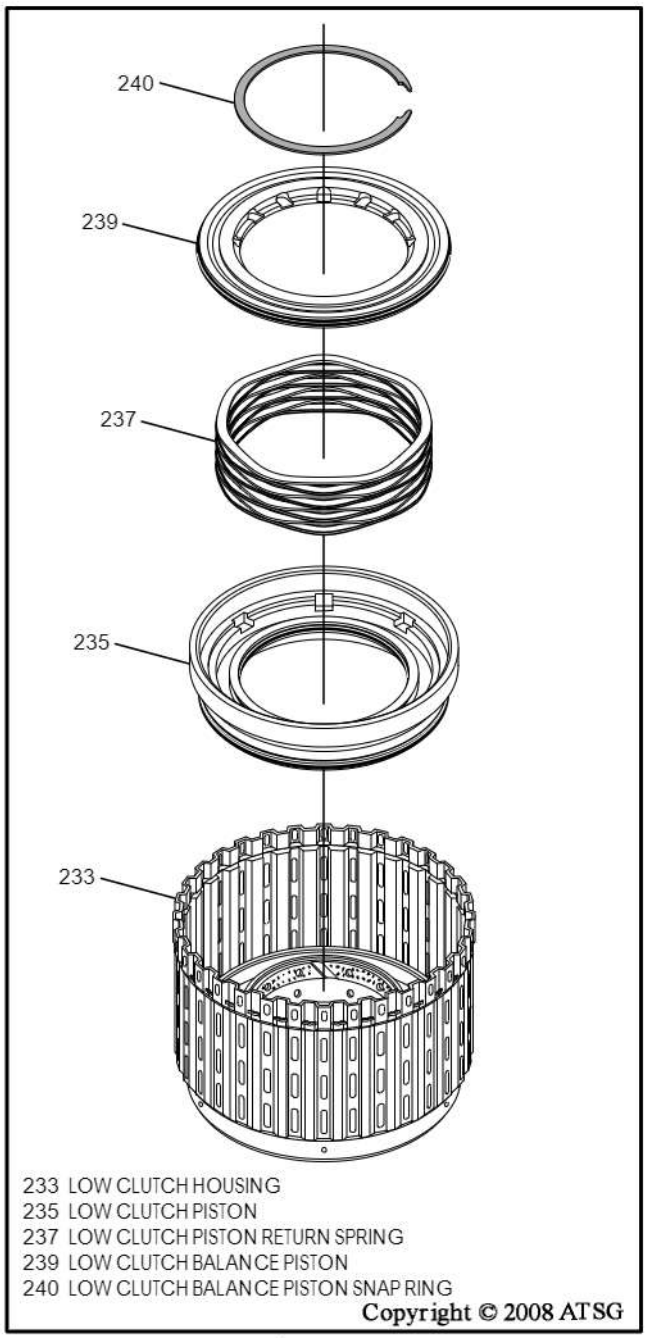

Figure 128

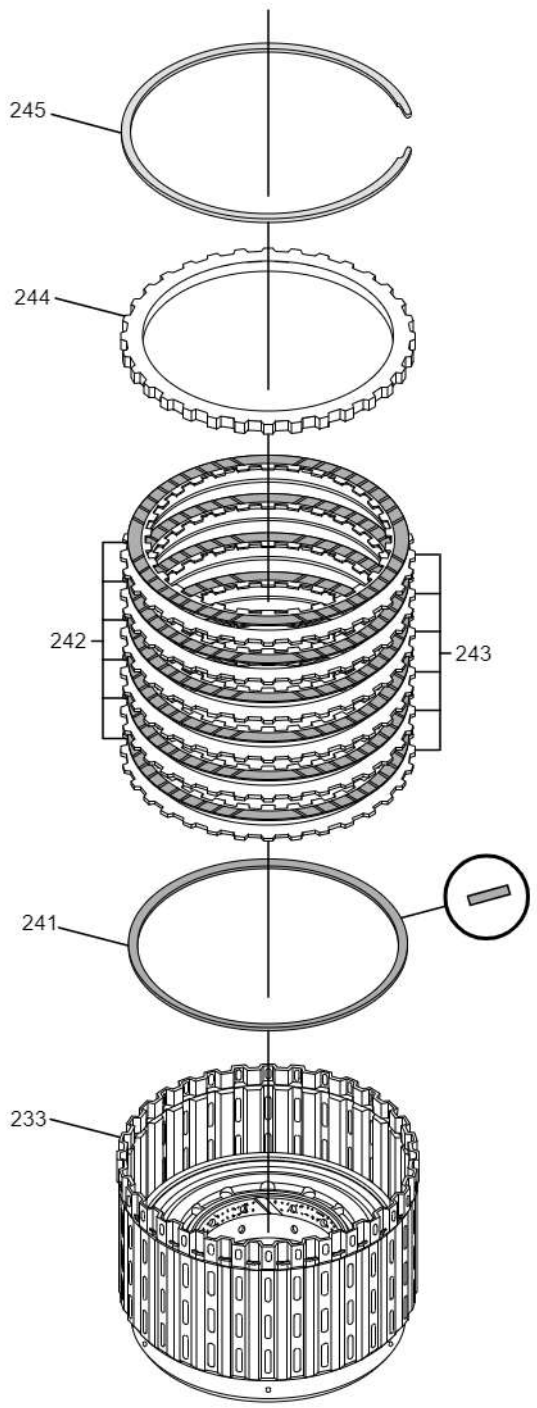

233 LOW CLUTCH HOUSING
241 LOW CLUTCH "CONE" CUSHION SPRING
242 LOW CLUTCH FRICTION PLATES (6 REQUIRED)
243 LOW CLUTCH STEEL PLATES (6 REQUIRED)
244 LOW CLUTCH "SELECTIVE" BACKING PLATE
245 LOW CLUTCH BACKING PLATE SNAP RING

Copyright © 2008 ATSG

Figure 129

Low Clutch Housing (Cont'd)

8. Install the low clutch piston return spring, as shown in Figure 128.
9. Install the low clutch balance piston inside of the low apply piston, as shown in Figure 128.
10. Compress the low clutch balance piston using the proper adapters and install the snap ring, as shown in Figure 128.
11. Install the low clutch "cone" cushion spring so the outside diameter will contact the steel plate and the inside diameter will contact the piston, as shown in Figure 129.
12. Install the low clutch plates beginning with a steel plate and alternating with a friction plate until you have installed six of each, as shown in Figure 129.
    Note: All clutch plates should be soaked for 30 minutes in the proper fluid for the vehicle, before installation.
13. Install the "selective" low clutch backing plate as shown in Figure 129.
14. Install the low clutch backing plate snap ring, as shown in Figure 129.

Continued on Page 73

Low Clutch Housing (Cont'd)

15. Measure low clutch clearance using a feeler gage, as shown in Figure 130.
    Note: Low clutch clearance should be; 1.1mm - 1.3mm (.043" - .051").
16. Change selective backing plate as necessary using the chart in Figure 130.
17. Turn the low clutch housing over and install the number 1 thrust bearing, with the black or gold side facing up, as shown in Figure 131, and retain with a small amount of Trans-Jel®.
18. Set the completed low clutch housing aside for the final assembly process (See Figure 132).

Component Rebuild
Continued on Page 74

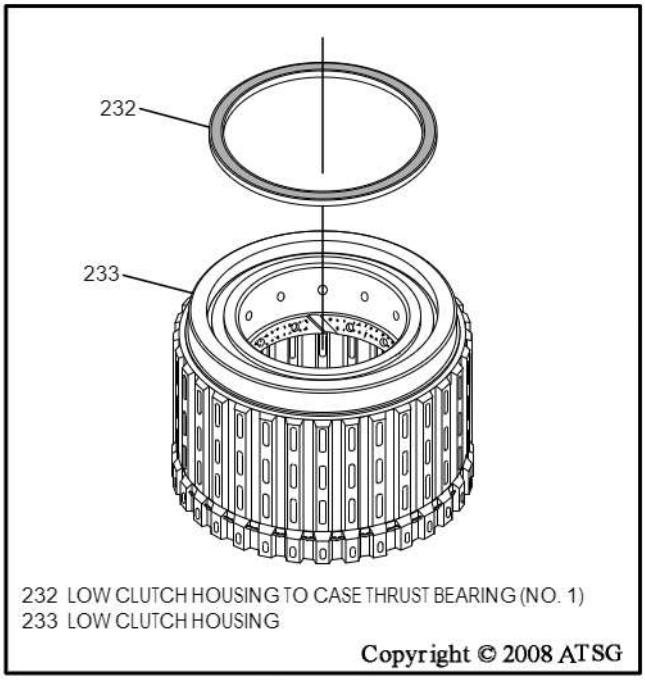

Figure 131

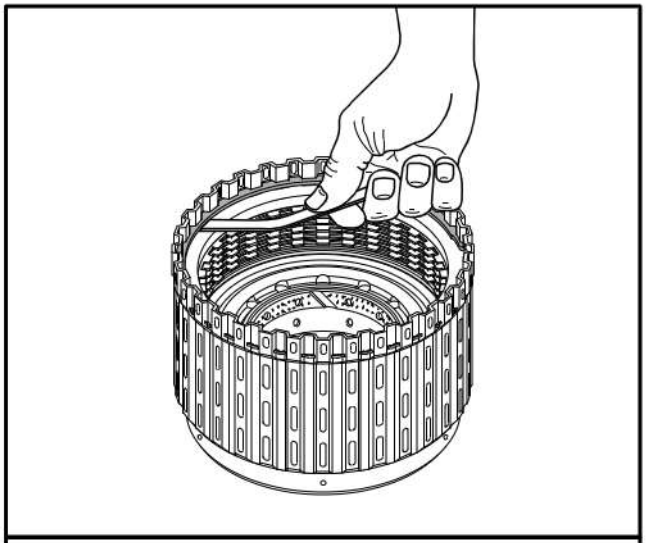

Low Clutch Clearance Should Be 1.1mm - 1.3mm (.043" - .051")	
Selective Low Clutch Backing Plates	
3.8mm (.150")	*3.9mm (.154")*
4.0mm (.157")	*4.1mm (.161")*
4.2mm (.165")	*4.3mm (.169")*
4.4mm (.173")	*4.5mm (.177")*
4.6mm (.181")	

Copyright © 2008 ATSG

Figure 130

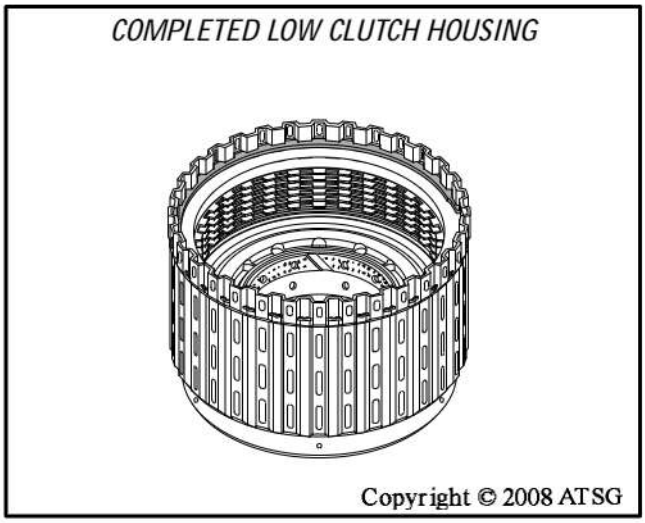

Figure 132

HIGH AND REVERSE CLUTCH HOUSING EXPLODED VIEW

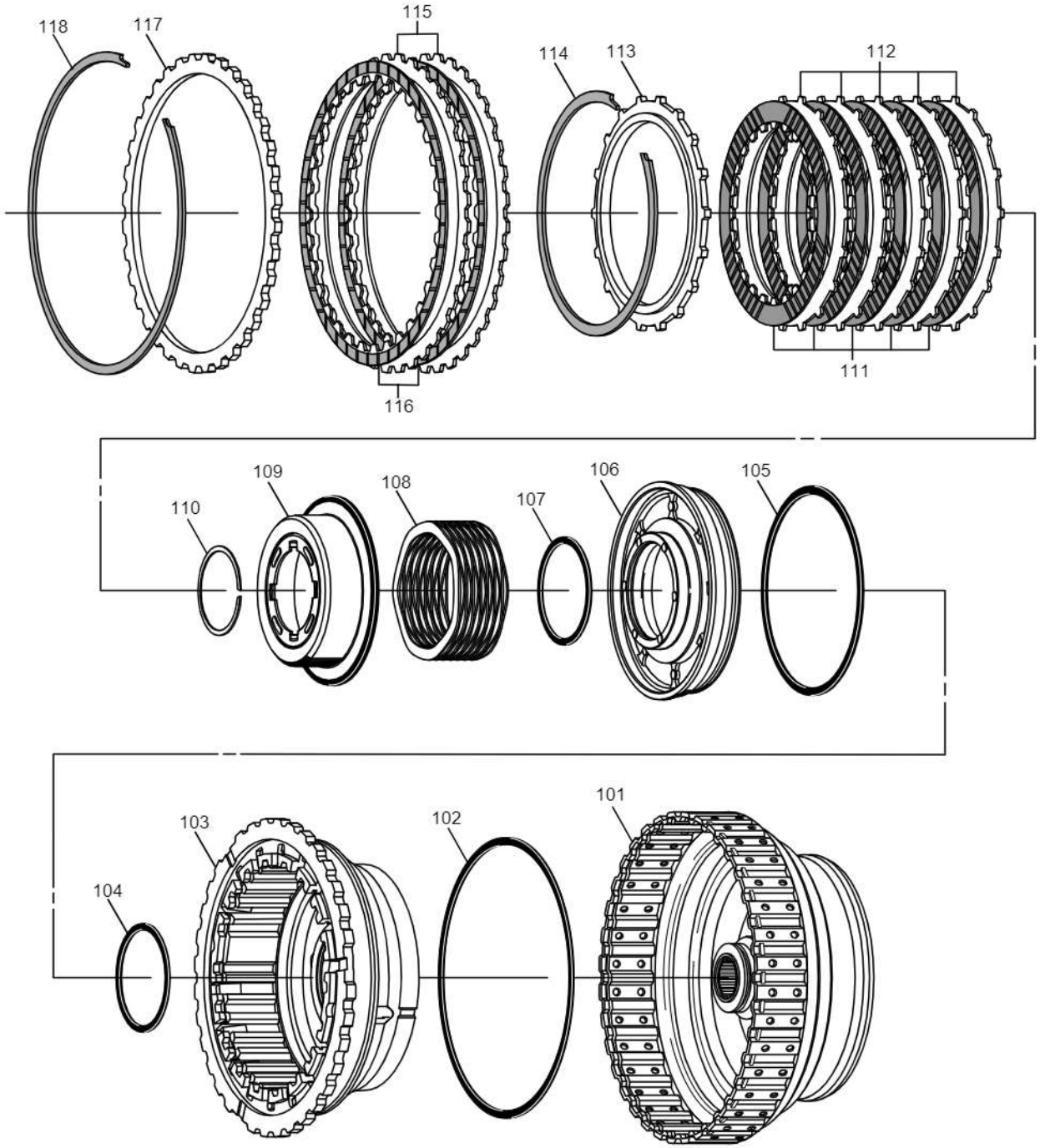

101 REVERSE CLUTCH HOUSING ASSEMBLY
102 REVERSE CLUTCH PISTON OUTER "D" RING SEAL
103 HIGH CLUTCH HOUSING/REVERSE PISTON ASSEMBLY
104 REVERSE CLUTCH PISTON INNER "D" RING SEAL
105 HIGH CLUTCH PISTON OUTER "D" RING SEAL
106 HIGH CLUTCH PISTON
107 HIGH CLUTCH PISTON INNER "D" RING SEAL
108 HIGH CLUTCH PISTON RETURN SPRING
109 HIGH CLUTCH BALANCE PISTON
110 HIGH CLUTCH BALANCE PISTON SNAP RING
111 HIGH CLUTCH FRICTION PLATES
112 HIGH CLUTCH STEEL PLATES
113 HIGH CLUTCH BACKING PLATE
114 HIGH CLUTCH BACKING PLATE SNAP RING
115 REVERSE CLUTCH STEEL PLATES
116 REVERSE CLUTCH FRICTION PLATES
117 REVERSE CLUTCH BACKING PLATE
118 REVERSE CLUTCH BACKING PLATE SNAP RING

Copyright © 2008 ATSG

Figure 133

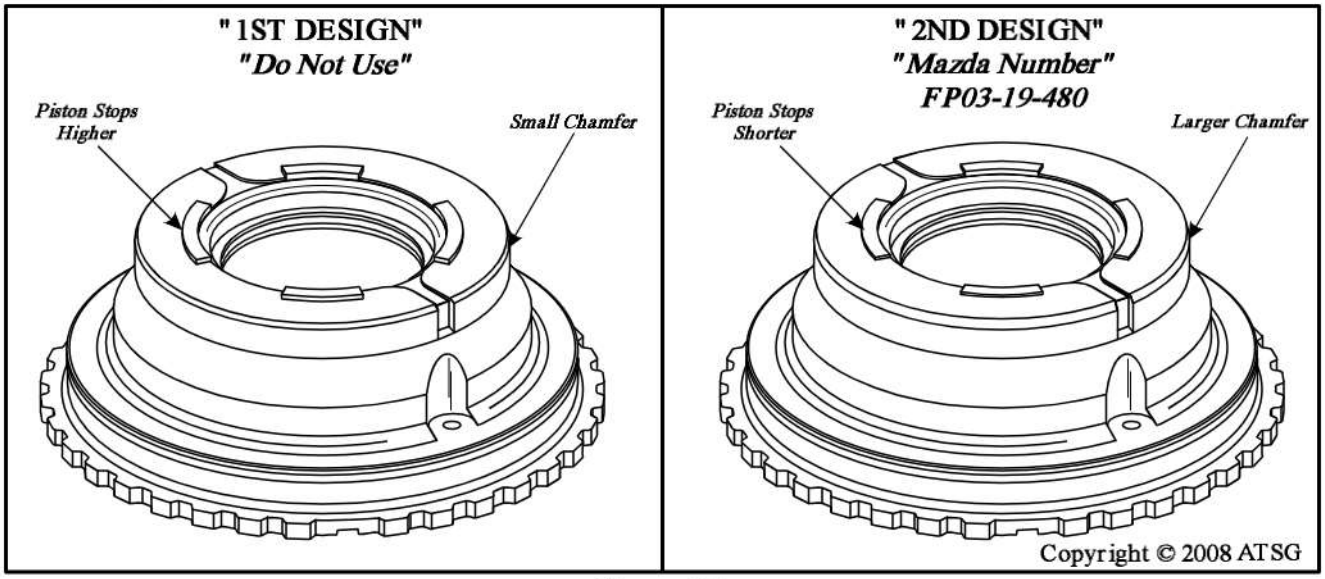

Figure 134

COMPONENT REBUILD (CONT'D)

High And Reverse Clutch Housing

1. Disassemble high and reverse clutch housing using Figure 133 as a guide.
2. Clean all high and reverse clutch housing parts thoroughly and dry with compressed air.
3. Inspect all high and reverse clutch housing parts for any wear and/or damage, replace as necessary.
4. Check to ensure that you have a 2nd design reverse piston, as shown in Figure 134.
   Note: "Do Not" use 1st design piston.
5. Install new inner and outer "D" ring seals onto the reverse piston, as shown in Figure 135, and lube with small amount of Trans-Jel®.
6. Install new inner and outer "D" ring seals onto the high clutch piston, as shown in Figure 136, and lube with small amount of Trans-Jel®.

Continued on Page 76

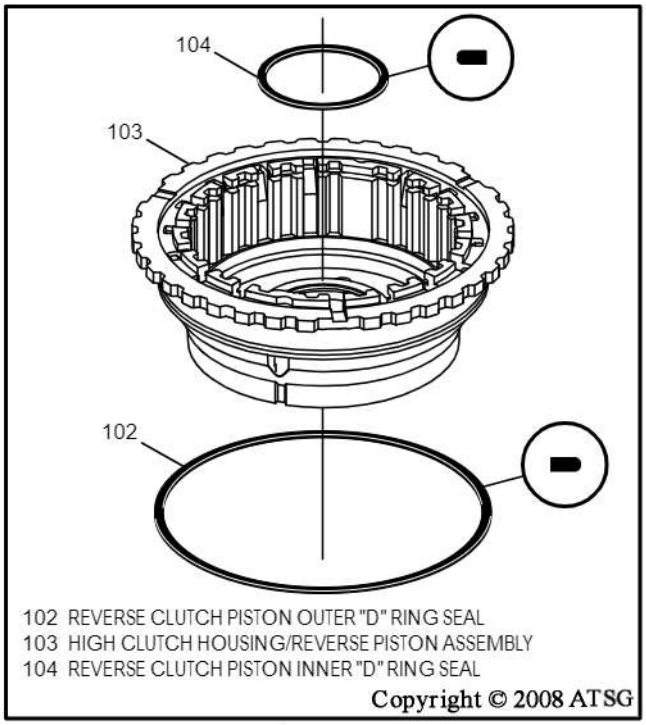

Figure 135

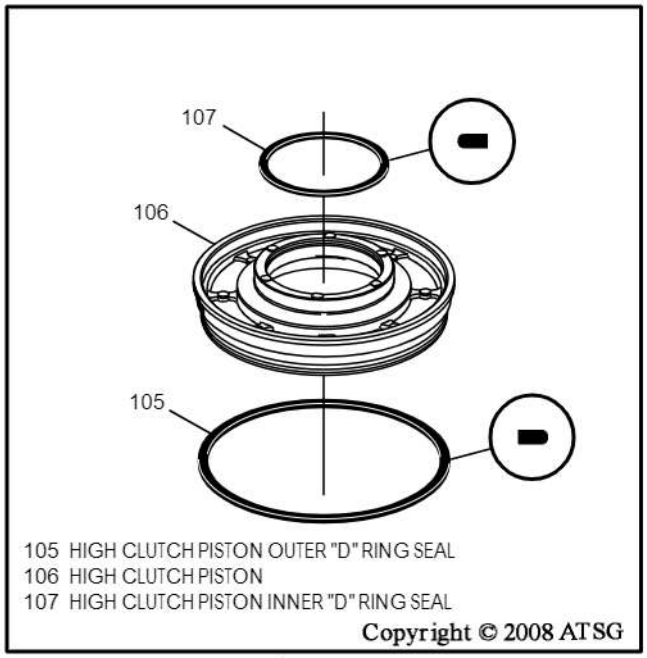

Figure 136

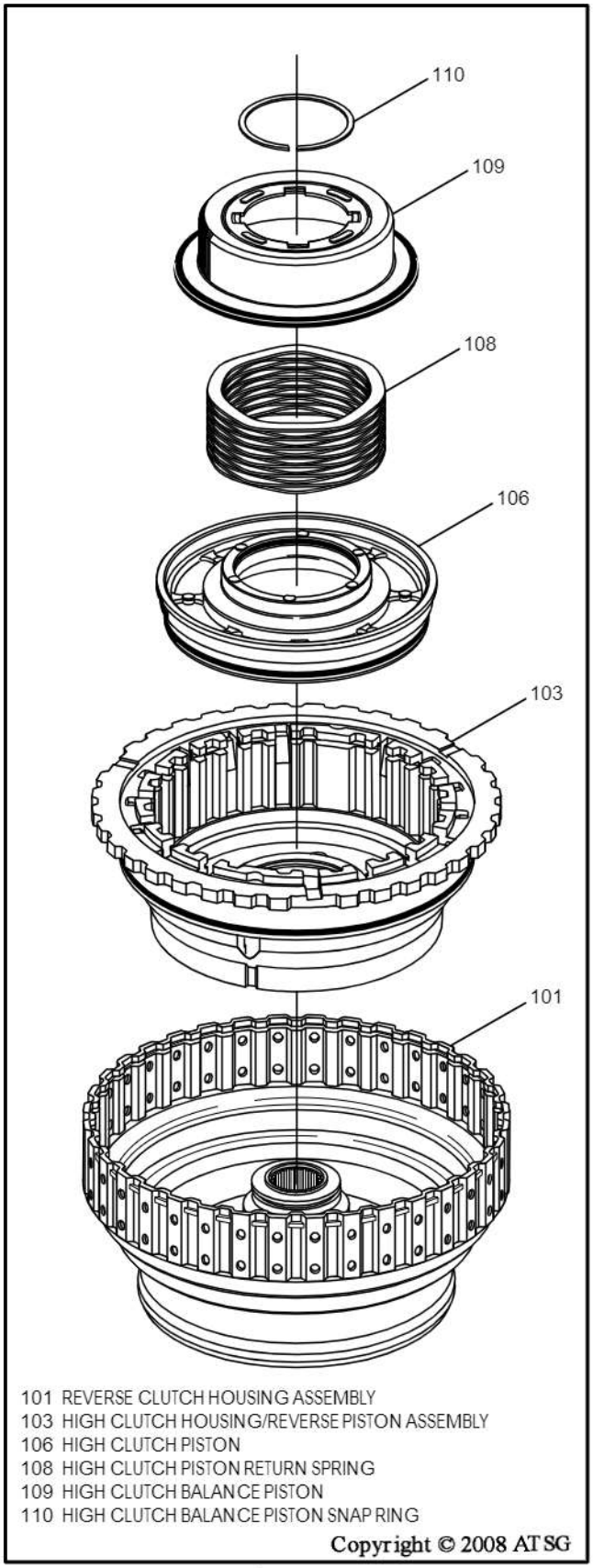

Figure 137

High And Reverse Clutch Housing (Cont'd)

7. Install the high clutch housing/reverse piston assembly into the reverse clutch housing, as shown in Figure 137.
8. Install the high clutch apply piston into high clutch housing/reverse piston assembly, as shown in Figure 137, and ensure that both of the pistons are fully seated.
9. Install the return spring assembly, as shown in Figure 137.
10. Install the high clutch balance piston on top of return spring, as shown in Figure 137.
11. Compress the balance piston and return spring using the proper adapters and install the snap ring, as shown in Figure 137.
12. Release the compression, remove compression tools and ensure that snap ring is properly and fully seated, as shown in Figure 138.

Continued on Page 77

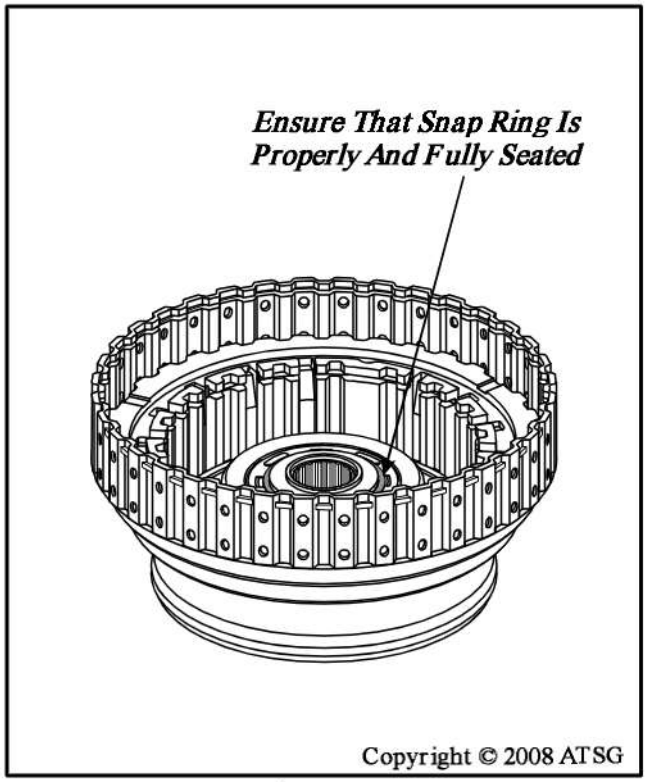

Figure 138

High And Reverse Clutch Housing (Cont'd)

13. Install the high clutch plates beginning with a steel plate and alternating with friction plates until you have installed five of each, as shown in Figure 139.
    Note: All clutch plates should be soaked for 30 minutes in the proper fluid for the vehicle before installation.
14. Install the selective high clutch backing plate, as shown in Figure 139.
15. Install the high clutch backing plate snap ring, as shown in Figure 139.
16. Measure high clutch clearance using a feeler gage, as shown in Figure 140.
    Note: High clutch clearance should be; 0.8mm - 1.1mm (.031" - .043").
17. Change the selective high clutch backing plate as necessary using the chart in Figure 140.

Continued on Page 78

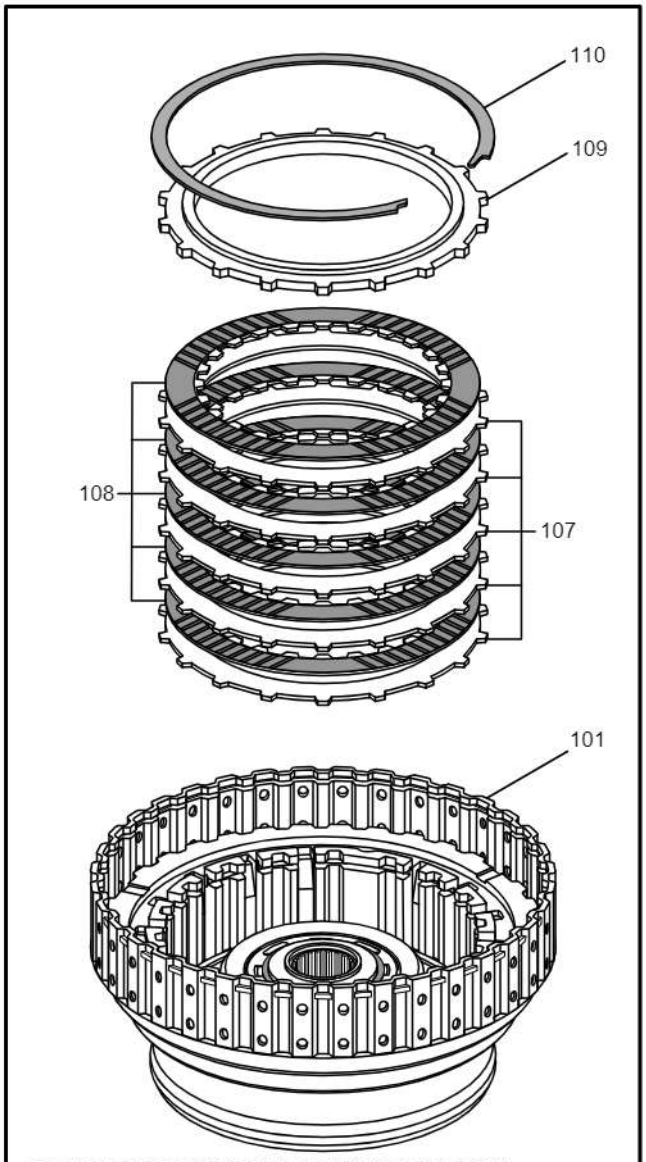

101 HIGH AND REVERSE CLUTCH HOUSING ASSEMBLY
107 HIGH CLUTCH STEEL PLATES
108 HIGH CLUTCH FRICTION PLATES
109 HIGH CLUTCH SELECTIVE BACKING PLATE
110 HIGH CLUTCH BACKING PLATE SNAP RING

Copyright © 2008 ATSG

Figure 139

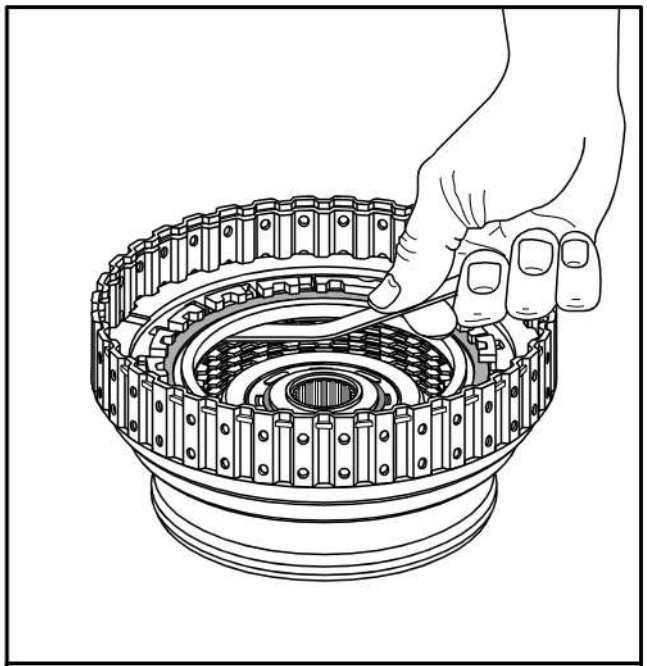

High Clutch Clearance Should Be 0.8mm - 1.1mm (.031" - .043")	
Selective High Clutch Backing Plates	
3.0mm (.118")	***3.2mm (.126")***
3.4mm (.134")	***3.6mm (.142")***

Copyright © 2008 ATSG

Figure 140

High And Reverse Clutch Housing (Cont'd)

18. Install the reverse clutch plates beginning with a steel plate and alternating with frictions until you have installed two of each plate, as shown in Figure 141.
    Note: All clutch plates should be soaked for 30 minutes in the proper fluid for the vehicle before installation.
19. Install reverse clutch selective backing plate, as shown in Figure 141.
20. Install reverse clutch backing plate snap ring, as shown in Figure 141.
21. Measure reverse clutch clearance using feeler gage between backing plate and snap ring, as shown in Figure 142.
    Note: Reverse clutch clearance should be; 0.5mm 0.8mm (.020" -.031").
22. Change selective backing plate as necessary using the chart in Figure 142.

Continued on Page 79

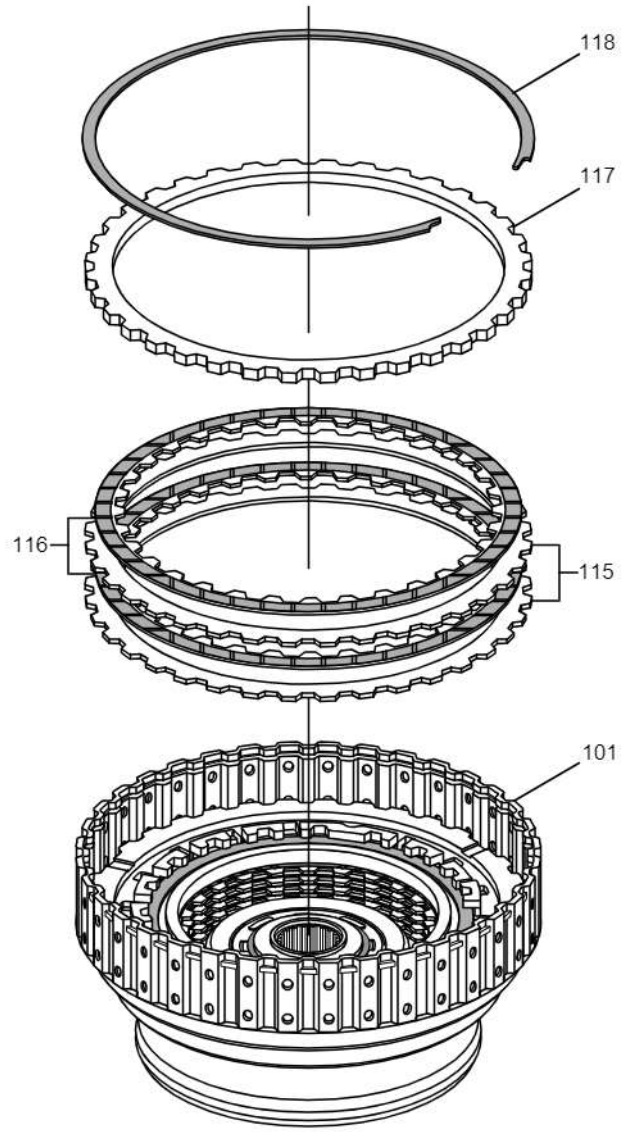

101 HIGH AND REVERSE CLUTCH HOUSING ASSEMBLY
115 REVERSE CLUTCH STEEL PLATES
116 REVERSE CLUTCH FRICTION PLATES
117 REVERSE CLUTCH SELECTIVE BACKING PLATE
118 REVERSE CLUTCH BACKING PLATE SNAP RING

Copyright © 2008 ATSG

Figure 141

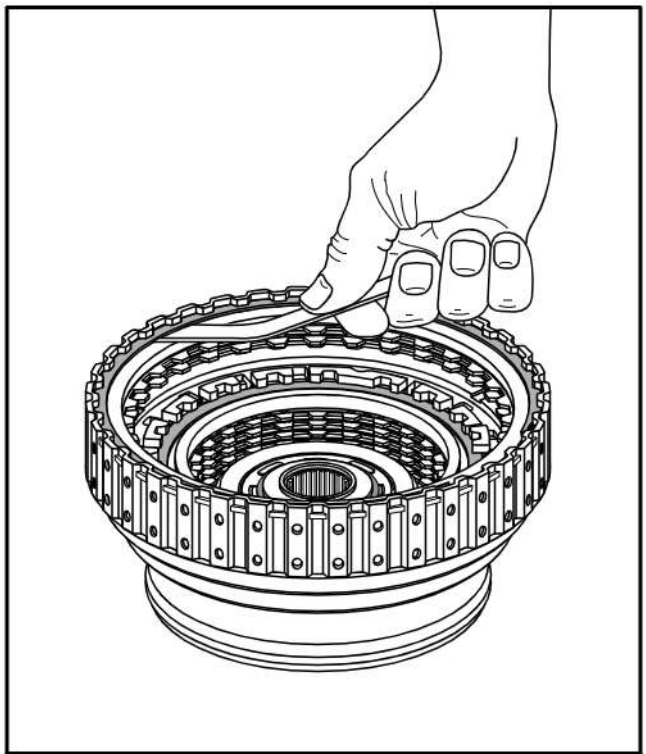

Reverse Clutch Clearance Should Be 0.5mm - 0.8mm (.020" - .031")	
Selective Reverse Clutch Backing Plates	
3.6mm (.142")	*3.8mm (.150")*
4.0mm (.157")	*4.2mm (.165")*

Copyright © 2008 ATSG

Figure 142

High And Reverse Clutch Housing (Cont'd)

23. Install the number 8 thrust bearing inside the high and reverse clutch housing, as shown in Figure 143, and retain with a small amount of Trans-Jel®.
24. Turn the high and reverse clutch housing over, as shown in Figure 144, and install number 9 thrust bearing and number 9A thrust bearing race, retain with a small amount of Trans-Jel®.
25. Set completed high and reverse clutch housing assembly aside for the final assembly process.

Component Rebuild
Continued on Page 80

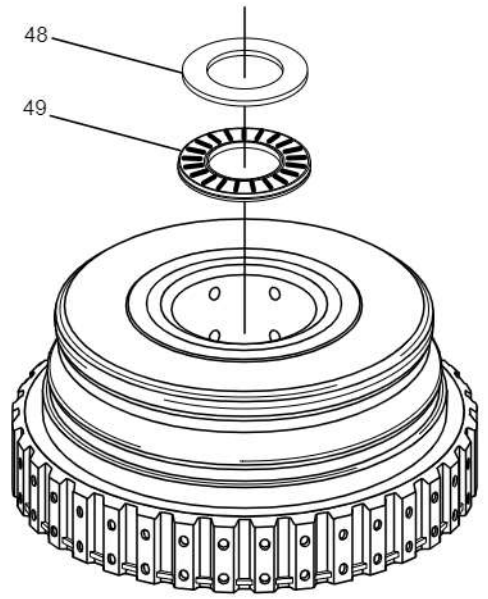

48 END COVER THRUST BEARING RACE (NO. 9A)
49 END COVER THRUST BEARING (NO. 9)

Copyright © 2008 ATSG

Figure 144

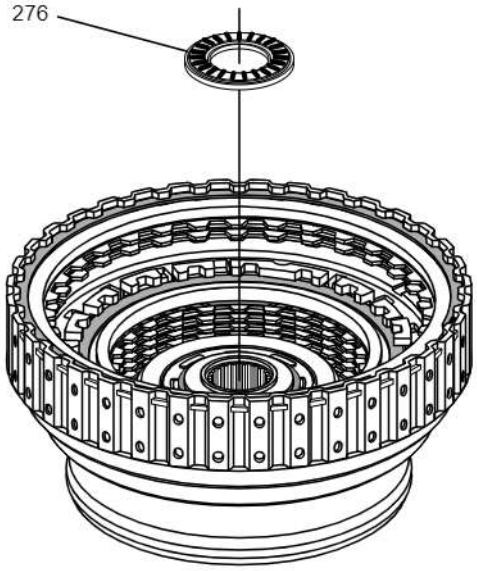

276 HIGH CLUTCH HUB THRUST BEARING RACE (NO. 8A)

Copyright © 2008 ATSG

Figure 143

A very hearty "Thank You" to Frank Kuperman of Phoenix Remanufactured Transmissions for supplying us with the transaxles that made this manual possible.

PHXRETRANS
Phoenix Remanufactured Transmissions

(623) 936-1500
7310 W. Roosevelt #26
Phoenix, AZ 85043
www. phoenixhardparts.com

OIL PUMP ASSEMBLY EXPLODED VIEW

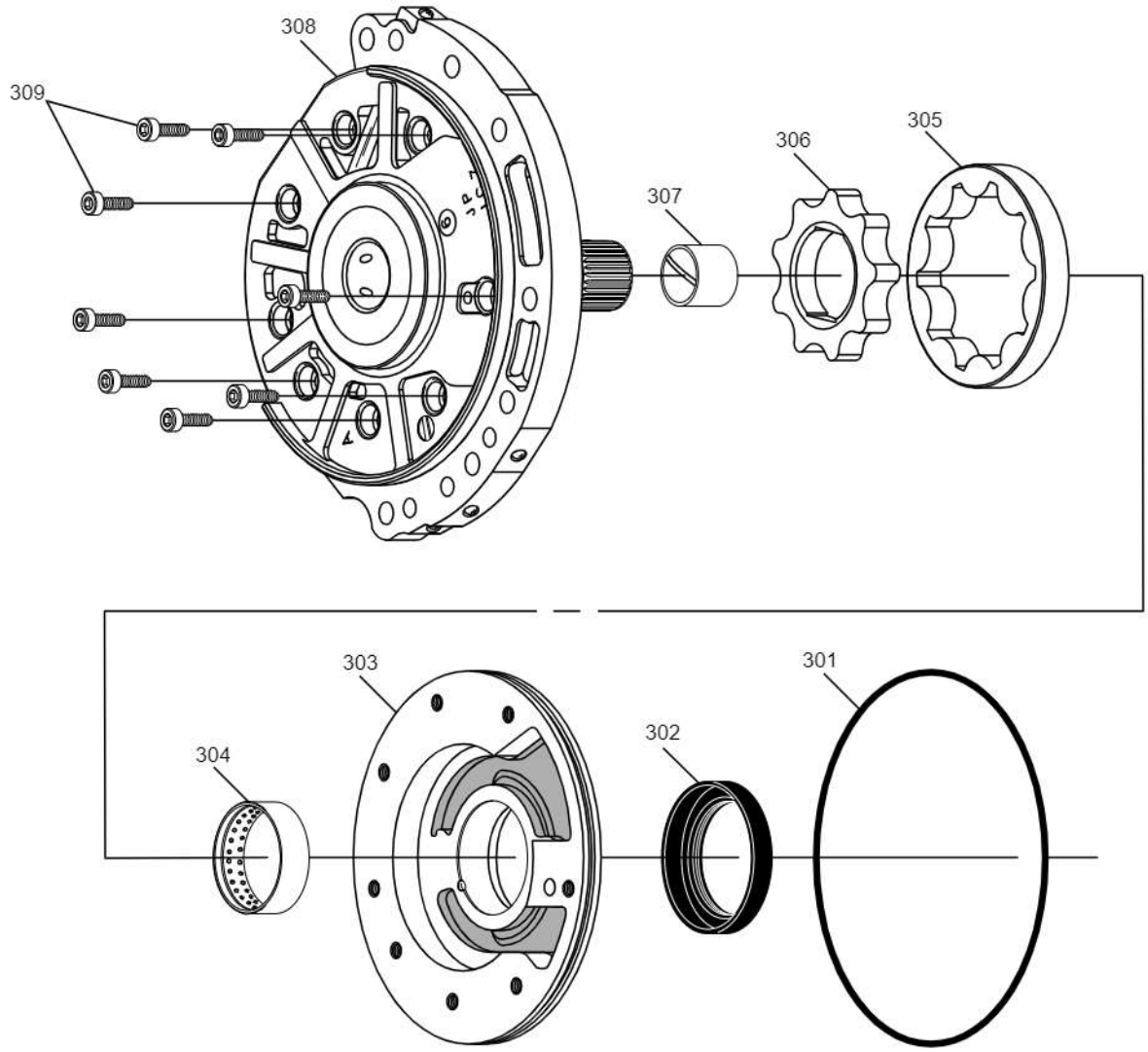

301 OIL PUMP TO CONVERTER HOUSING "O" RING SEAL
302 OIL PUMP CONVERTER SEAL
303 OIL PUMP BODY
304 OIL PUMP BODY BUSHING
305 OIL PUMP OUTER GEROTOR
306 OIL PUMP INNER GEROTOR
307 OIL PUMP STATOR SHAFT BUSHING
308 OIL PUMP COVER AND STATOR SHAFT ASSEMBLY
309 OIL PUMP COVER TO OIL PUMP BOLTS (8 REQUIRED)

Copyright © 2008 ATSG

Figure 145

COMPONENT REBUILD (CONT'D)

Oil Pump Assembly

1. The Oil Pump Assembly has the Gerotor style pump gears, without a pump cresent, as shown in Figure 145.
2. Disassemble the oil pump by removing the 8 retaining bolts, as shown in Figure 145, then removing the oil pump cover.
3. Mark the inner and outer gerotor with some type of a permanent marker, like a "Sharpie", ***before removal*** from the pump body, as shown in Figure 146, so that they can be re-installed with the same side facing up as original. ***Note: "Do Not" scratch or dent them for identification (See Figure 146).***
4. Remove and discard the converter seal and the pump body to converter housing "O" ring seal.
5. Clean all oil pump parts thoroughly and dry with compressed air.
6. Inspect all oil pump parts thoroughly for any wear and/or damage.
7. Measure the gear to face clearance using feeler gage and straight edge, as shown in Figure 147.
8. Measure the outer gear to body with the feeler gage and use the specifications that are shown in Figure 147 to determine replacement needs.
9. Install new pump body bushing as necessary, as shown in Figure 148, using proper driver. ***Note: Step on inside diameter of the bushing faces the gears, as shown in Figure 148.***

Continued on Page 82

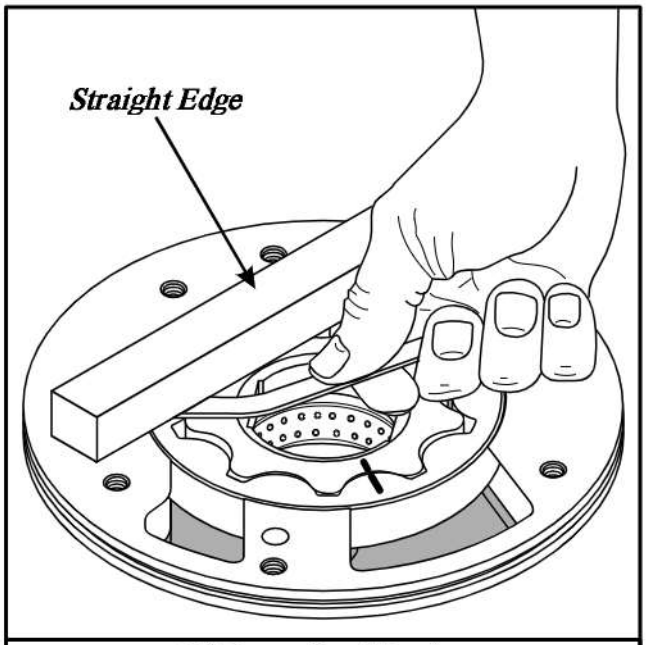

Oil Pump Specifications

COMPONENT	*SPECIFICATION*
INNER GEAR TO FACE	.0008" - .0015"
OUTER GEAR TO FACE	.0008" - .002"
OUTER GEAR TO BODY	.004" - .006"

Copyright © 2008 ATSG

Figure 147

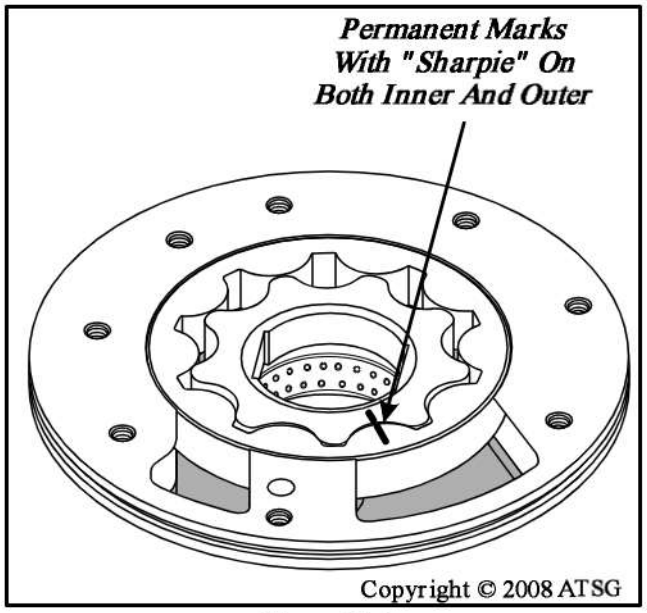

Copyright © 2008 ATSG

Figure 146

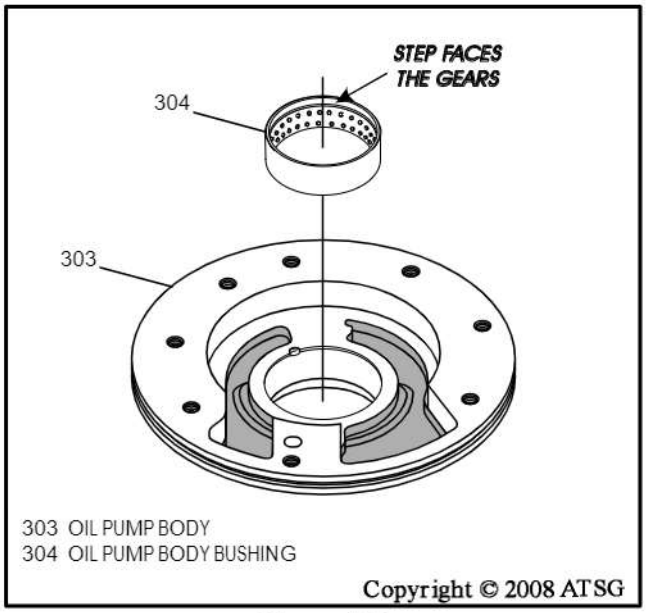

Copyright © 2008 ATSG

Figure 148

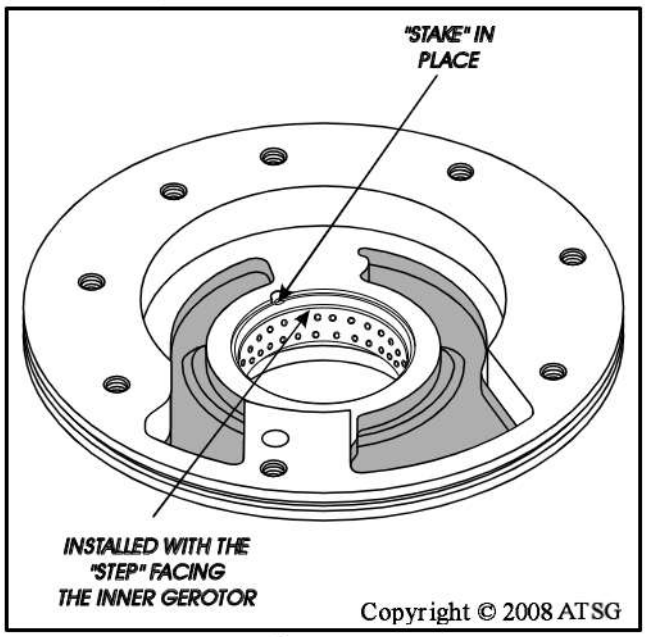

Figure 149

Oil Pump Assembly

10. Stake the new pump body bushing in place, as shown in Figure 149, using a small punch.
11. Turn the oil pump body over and install a new converter hub seal, as shown in Figure 150, using the proper seal driver.
12. Lubricate the inner and outer gerotor with the proper fluid for the vehicle and install them in the oil pump body, as shown in Figure 151. ***Note: Permanent marks with "Sharpie" previously made on gearset must face up, as shown in Figure 151.***

Continued on Page 83

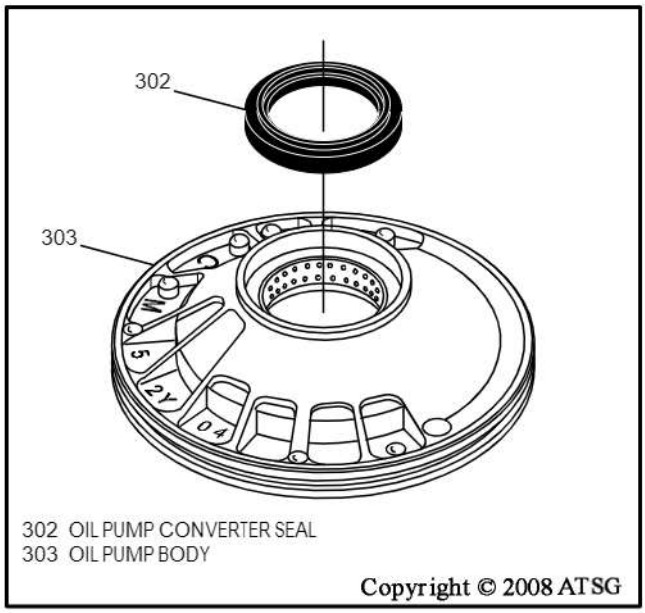

Figure 150

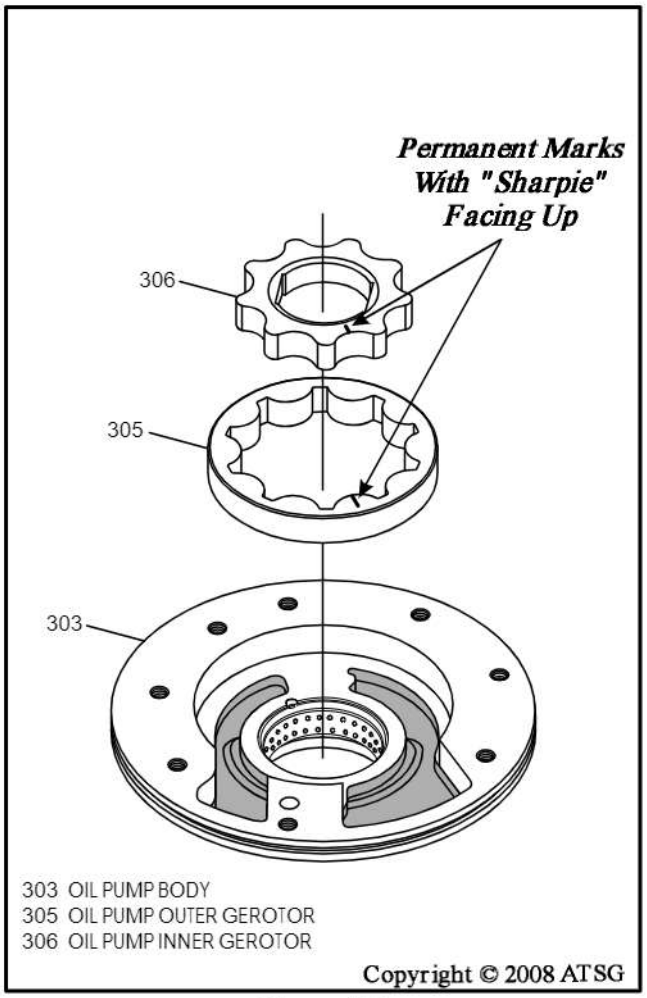

Figure 151

Oil Pump Assembly

13. Install oil pump cover and stator shaft assembly onto oil pump body, as shown in Figure 152.
14. Install the eight 5mm allen head retaining bolts, as shown in Figure 152, and hand tighten only.
15. Now torque the eight 5mm allen head bolts to 10 N·m (90 in.lb.), as shown in Figure 153, using a criss-cross pattern.
16. Install the oil pump body to converter housing "O" ring seal, as shown in Figure 154, and lube with a small amount of Trans-Jel®.
17. Set the completed oil pump assembly aside for the final assembly process.

Component Rebuild
Continued on Page 84

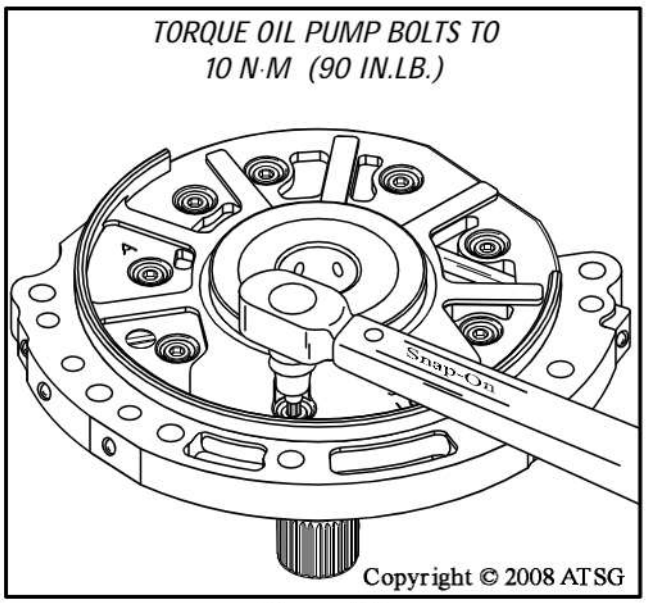

Figure 153

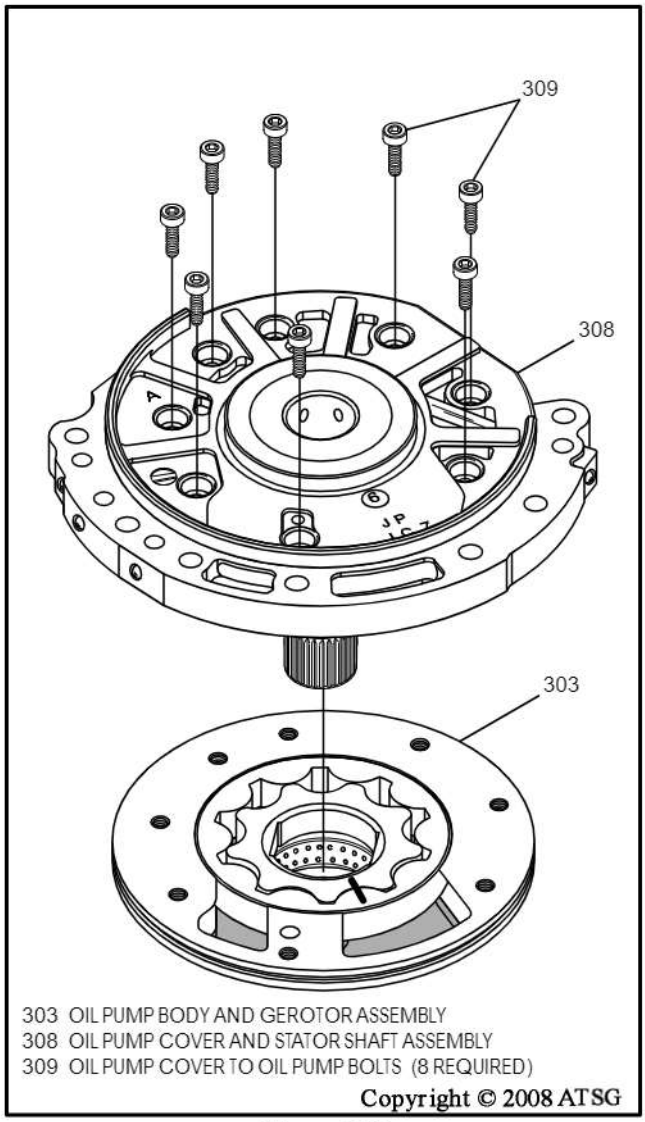

Figure 152

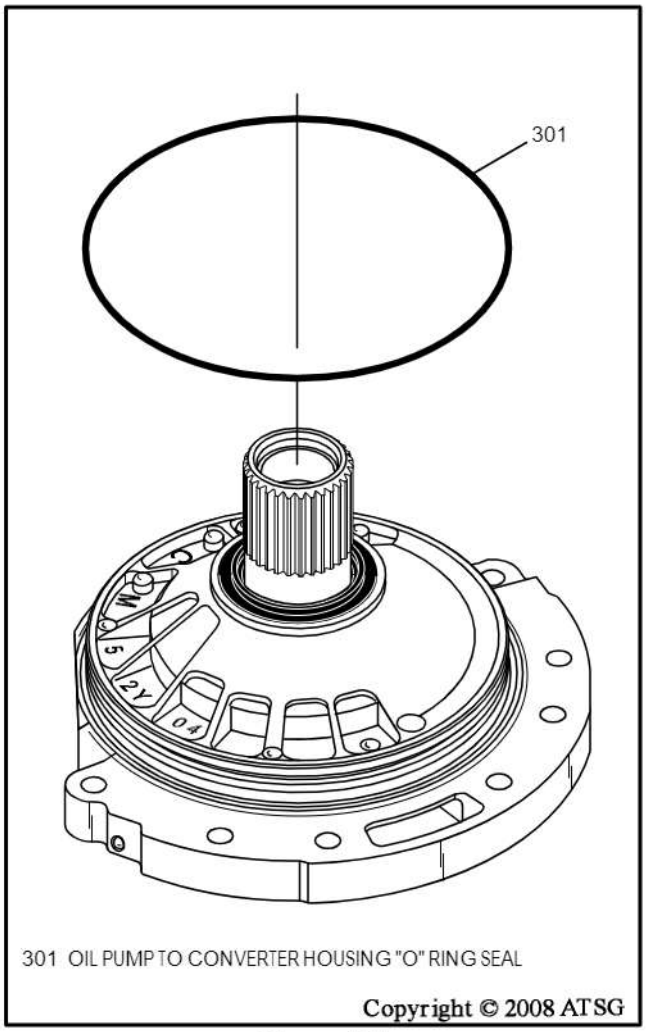

Figure 154

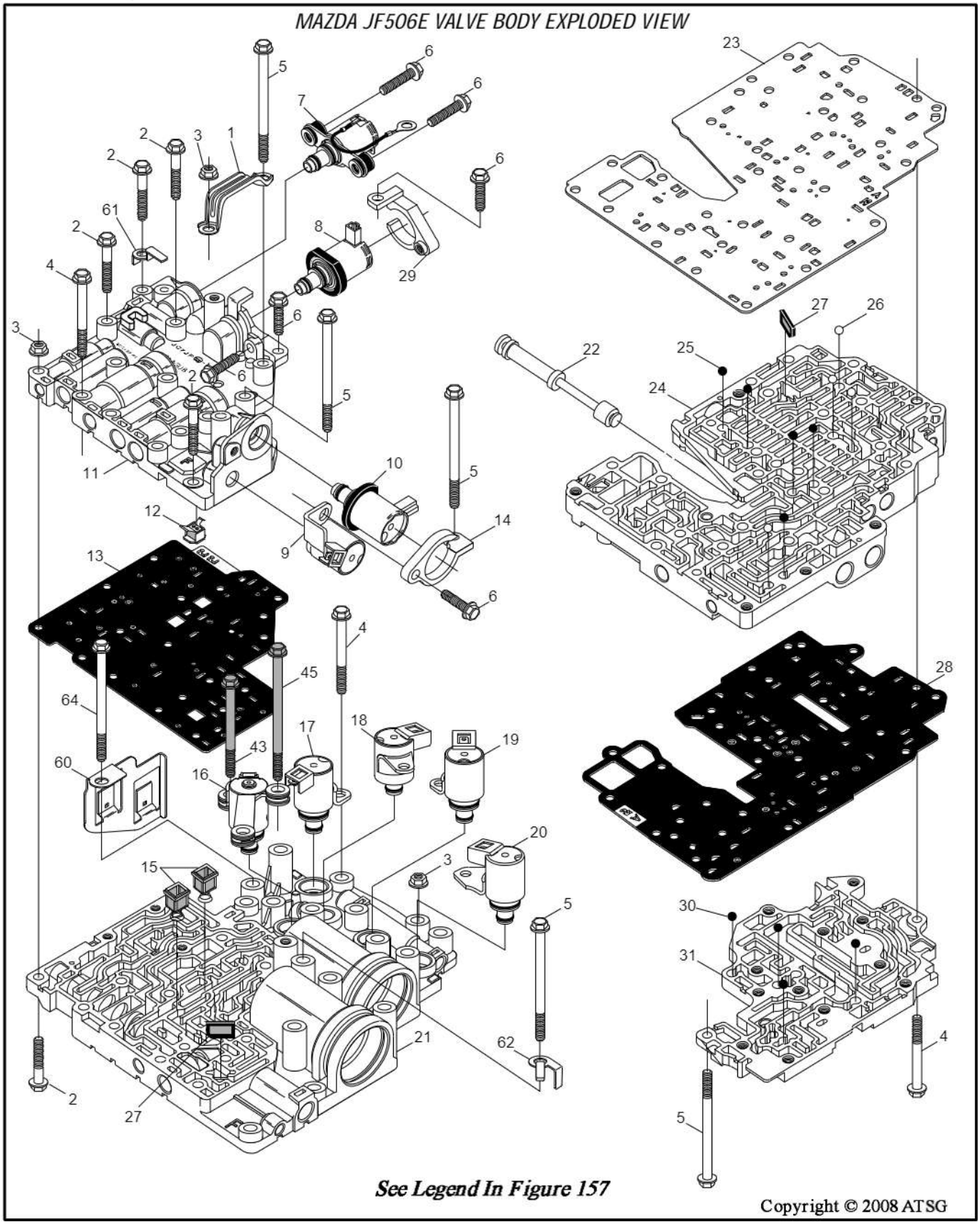
MAZDA JF506E VALVE BODY EXPLODED VIEW
See Legend In Figure 157
Copyright © 2008 ATSG

Figure 155

MAZDA JF506E "SUB LOWER" AND "LOWER" VALVE BODY EXPLODED VIEW

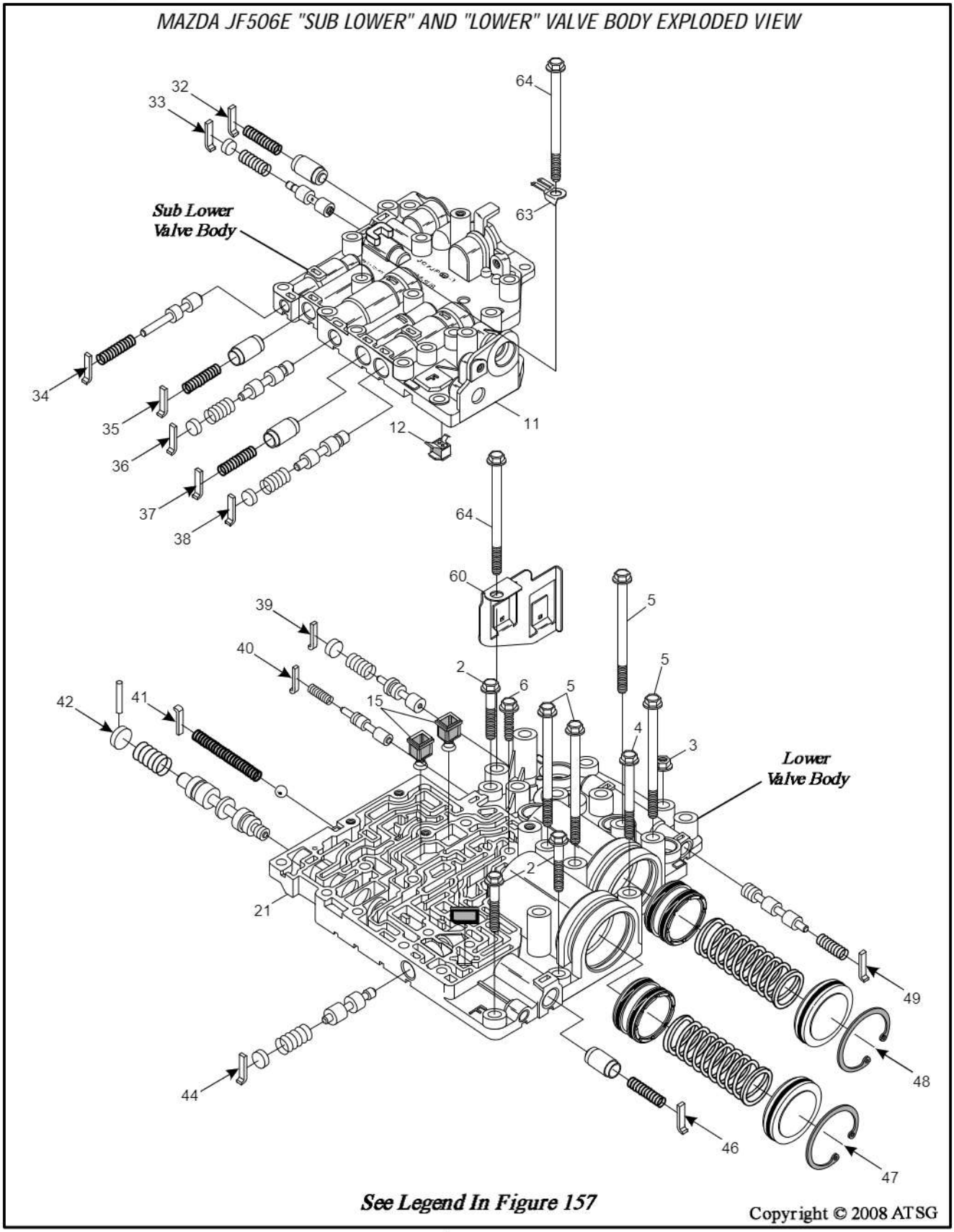

Figure 156

MAZDA JF506E "INTERNAL" VALVE BODY EXPLODED VIEW

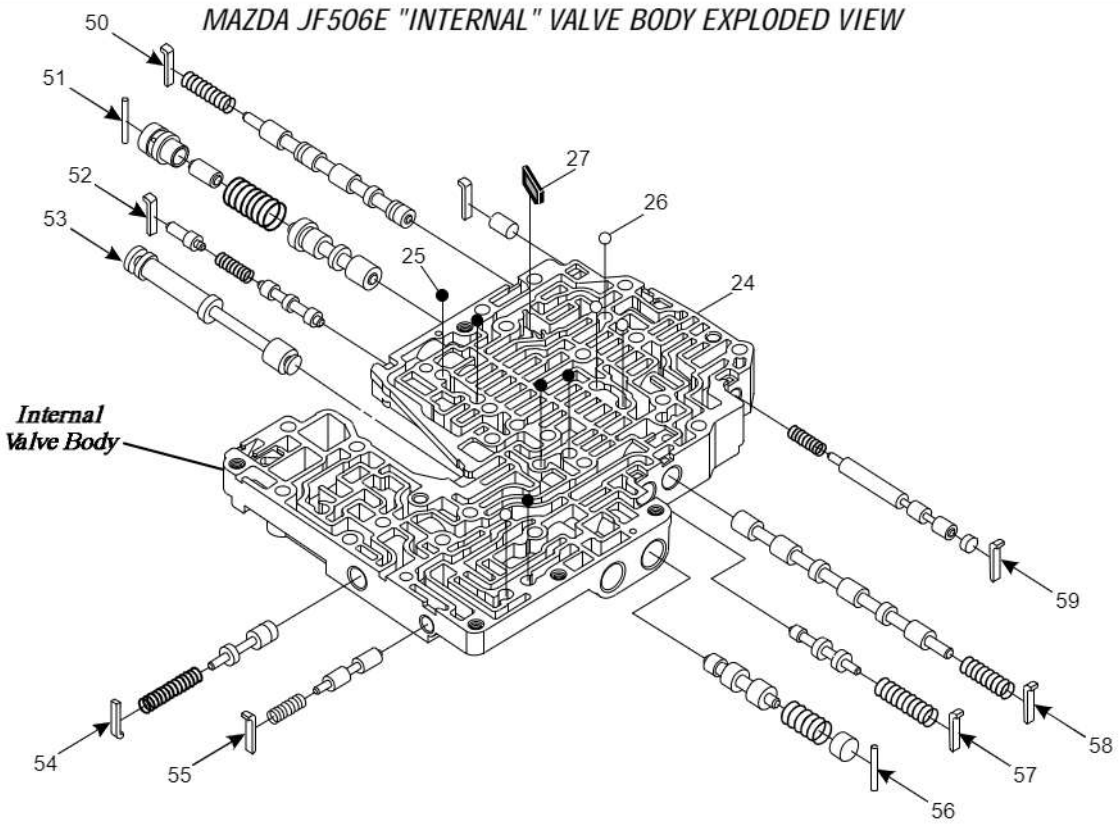

1 VALVE BODY BRACKET
2 VALVE BODY BOLT, 37MM LENGTH
3 NUT FOR VALVE BODY BOLT FROM BOTTOM
4 VALVE BODY BOLT, 67MM LENGTH
5 VALVE BODY BOLT, 90MM LENGTH
6 VALVE BODY BOLT, 24MM LENGTH
7 LINE PRESSURE SOLENOID (DUTY CYCLE)
8 HIGH CLUTCH SOLENOID (DUTY CYCLE)
9 NEUTRAL SHIFT SOLENOID (ON/OFF)
10 2/4 BRAKE SOLENOID (DUTY CYCLE)
11 SUB LOWER VALVE BODY CASTING
12 PILOT FILTER WITH "LEAF" SPRING
13 SPACER PLATE "A" WITH GASKETS
14 2/4 BRAKE SOLENOID BRASS RETAINING BRACKET
15 COIL SPRING LOADED FILTERS (2 REQUIRED)
16 TCC SOLENOID (DUTY CYCLE)
17 SHIFT SOLENOID "A" (ON/OFF)
18 REDUCTION TIMING SOLENOID (ON/OFF)
19 SHIFT SOLENOID "B" (ON/OFF)
20 SHIFT SOLENOID "C" (ON/OFF)
21 LOWER VALVE BODY CASTING
22 MANUAL SHIFT VALVE
23 SPACER PLATE "B" (NO GASKETS USED)
24 INTERNAL VALVE BODY CASTING
25 PLASTIC CHECK BALL (.218" DIAMETER, 5 REQUIRED)
26 STEEL CHECK BALL (.218" DIAMETER, 4 REQUIRED)
27 INTERNAL VALVE BODY FLAT SCREEN (2 REQUIRED)
28 SPACER PLATE "C" WITH BONDED GASKETS
29 HIGH CLUTCH SOLENOID BRASS RETAINING BRACKET
30 PLASTIC CHECK BALL (.218" DIAMETER, 4 REQUIRED)
31 UPPER VALVE BODY CASTING
32 MODIFIER ACCUMULATOR VALVE TRAIN
33 PRESSURE MODIFIER VALVE TRAIN
34 TORQUE CONVERTER PRESSURE REGULATOR VALVE TRAIN
35 THROTTLE ACCUMULATOR "A" VALVE TRAIN
36 ACCUMULATOR CONTROL VALVE "A" VALVE TRAIN
37 THROTTLE ACCUMULATOR "C" VALVE TRAIN
38 ACCUMULATOR CONTROL VALVE "C" VALVE TRAIN
39 REDUCTION REDUCING VALVE TRAIN
40 REDUCTION TIMING VALVE TRAIN
41 LINE PRESSURE RELIEF BALL AND SPRING
42 PRESSURE REGULATOR VALVE TRAIN
43 VALVE BODY BOLT, 75MM LENGTH (BLACK IN COLOR)
44 ACCUMULATOR CONTROL VALVE "B" VALVE TRAIN
45 VALVE BODY BOLT, 105.5MM LENGTH (BLACK IN COLOR)
46 THROTTLE ACCUMULATOR "B" VALVE TRAIN
47 HIGH CLUTCH ACCUMULATOR PISTON AND SPRING
48 LOW CLUTCH ACCUMULATOR PISTON AND SPRING
49 SHIFT VALVE "C" VALVE TRAIN
50 SHIFT VALVE "A" VALVE TRAIN
51 TCC CONTROL VALVE TRAIN
52 NEUTRAL SHIFT VALVE TRAIN
53 MANUAL SHIFT VALVE
54 PILOT VALVE TRAIN
55 ACCUMULATOR SWITCH VALVE TRAIN
56 NEUTRAL CONTROL VALVE TRAIN
57 REVERSE INHIBIT VALVE TRAIN
58 SHIFT VALVE "B" VALVE TRAIN
59 FAILSAFE VALVE TRAIN
60 INTERNAL CONNECTOR RETAINING BRACKET
61 INTERNAL SOLENOID WIRE HARNESS CLIP
62 INTERNAL SPEED SENSOR WIRE HARNESS CLIP
63 INTERNAL SPEED SENSOR WIRE HARNESS CLIP
64 VALVE BODY TO CASE BOLT, 90MM LONG *(SILVER IN COLOR)*

Copyright © 2008 ATSG

Figure 157

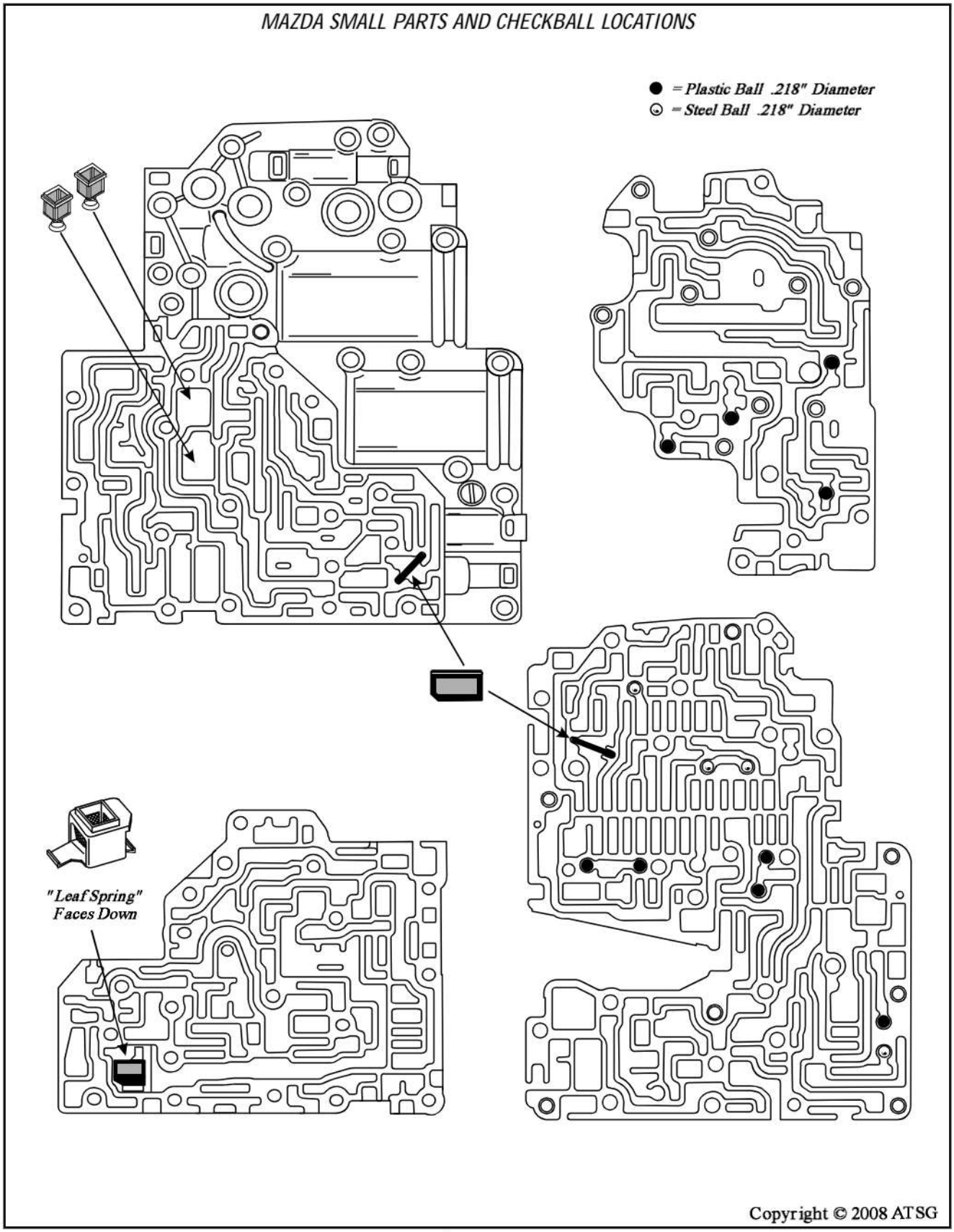
MAZDA SMALL PARTS AND CHECKBALL LOCATIONS
= Plastic Ball .218" Diameter
= Steel Ball .218" Diameter
"Leaf Spring" Faces Down
Copyright © 2008 ATSG

Figure 158

INDIVIDUAL VALVE DESCRIPTION	
Valve Train	***Function***
	Reduces oil pump discharge pressure according to pressure modifier pressure and adjusts to line pressure.
	Reduces pilot pressure according to throttle pressure and adjusts to pressure modifier pressure.
	Reduces line pressure and adjusts the pilot pressure.
	Reduces line pressure and adjusts to accumulator control pressure.
	Reduces line pressure and adjusts to torque converter pressure.
	Controls low clutch operating pressure.
	Adjusts line pressure to reduction reducing pressure for optimum control of reduction brake pressure operation.
	Prevents line pressure from exceeding a specified level.
	Applies or releases torque converter clutch according to operation of TCC solenoid.
	Switches oil path according to shift solenoid operation to perform automatic shifting of 1st thru 5th gear.
	Switches oil path of high clutch, low clutch and reverse brake.
	When vehicle is in forward motion and mistakenly shifted to reverse, it shifts to N position according to N shift solenoid.
	Switches oil path of low clutch pressure based on 2-4 brake solenoid operation.
	Directs line pressure to each control valve according to gear selector position.
	Switches timing of reduction brake operation when depressing accelerator in 5th gear, and when the selector lever is shifted from D to 3, or 2 to force engine braking.
	Reduces pulsation of control pressure to accumulator control valve "B"
	Reduces pulsation of control pressure to accumulator control valve "C"
	Regulates pressure to low clutch for smoother operation.
	Regulates pressure to high clutch for smoother operation.
	Copyright © 2008 ATSG

Figure 159

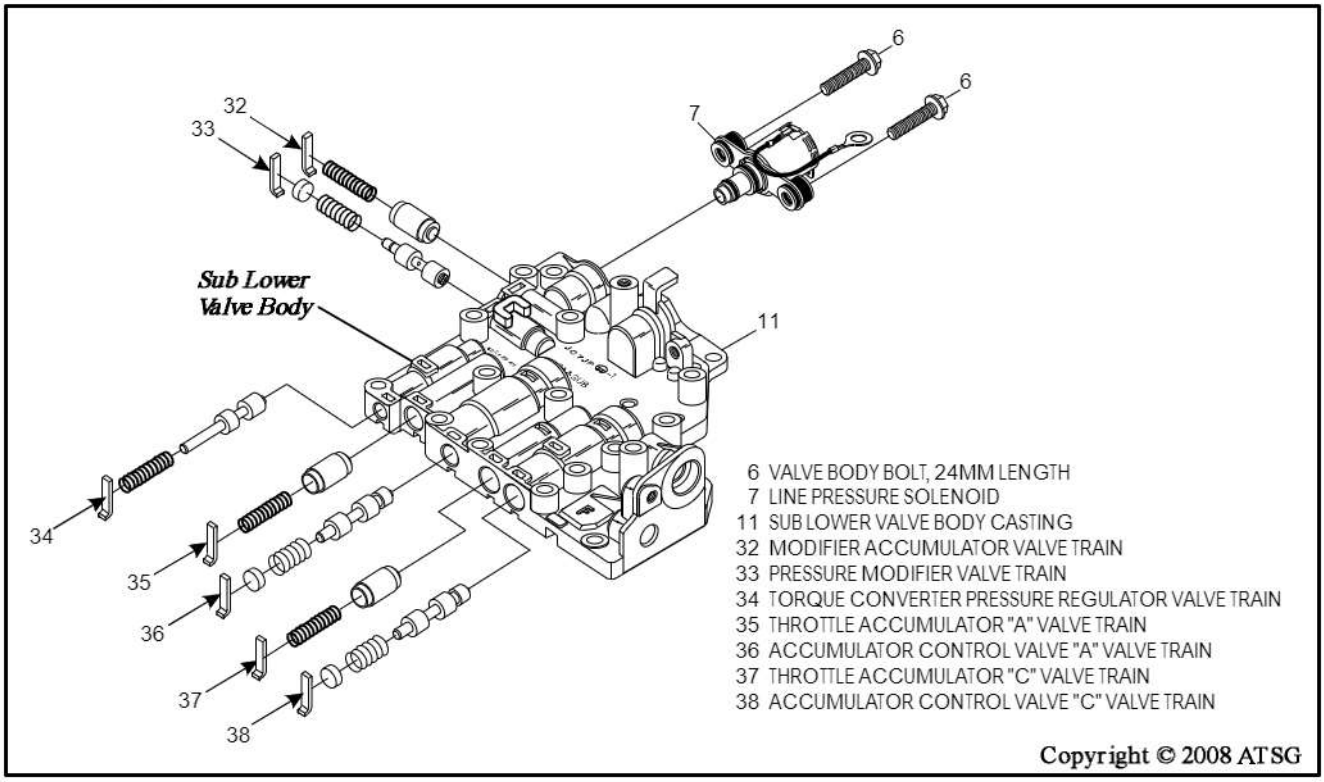

Figure 160

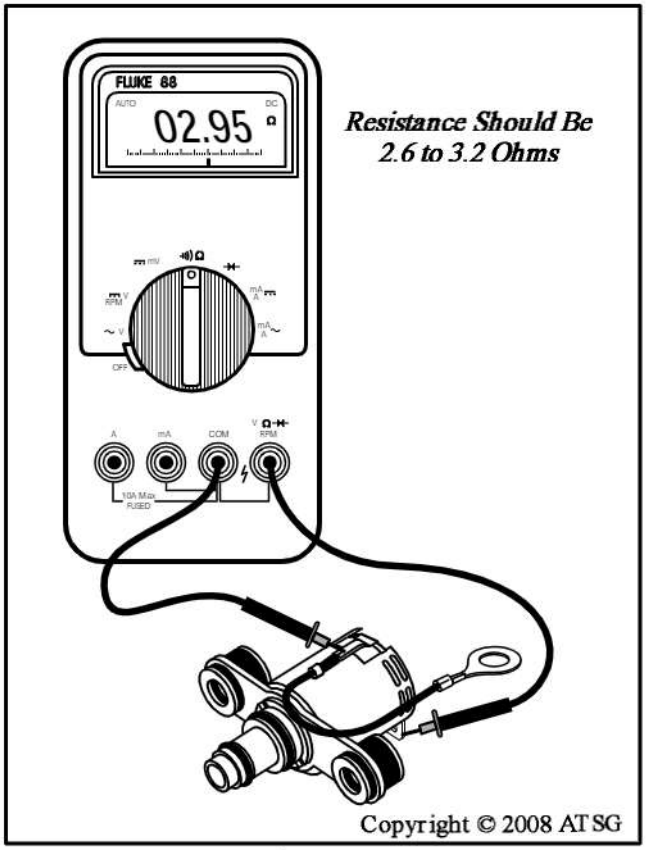

Figure 161

COMPONENT REBUILD (CONT'D)

Valve Body Assembly

1. Disassemble the valve body assembly using Figure 155 as a guide.
   Note: Tag the High and Low Accumulator piston springs as you remove them, as there are different calibrations, and no information available for identification.
2. Clean valve body component parts thoroughly and dry with compressed air.
3. Starting with the sub lower valve body, shown in Figure 160, disassemble and place valves, springs, bore plugs and retainers in appropriate trays exactly as they were removed.
4. Clean sub lower valve body parts thoroughly and dry with compressed air.
5. Assemble sub lower valve body parts ***exactly*** as shown in Figure 160, and lube with ATF as they are installed.
   Note: Install the retainers exactly as shown in Figure 160, as they install in different directions through out the valve body.
6. Check the line pressure solenoid for the proper resistance, as shown in Figure 161.

Continued on Page 90

Valve Body Assembly (Cont'd)

7. Install new "O" rings, lube with ATF, and install ***only*** the pressure control solenoid, as shown in Figure 160. Torque bolts to 10 N·m (88 in.lb).
   Note: Remaining 3 solenoids must wait for final valve body assembly.

COMPLETED SUB LOWER VALVE BODY ASSEMBLY

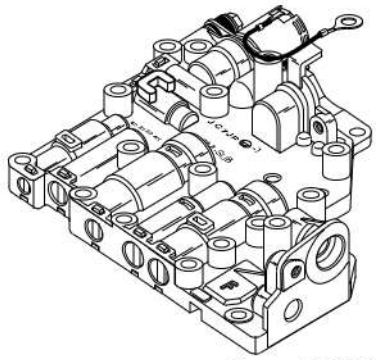

Copyright © 2008 ATSG

Figure 162

8. Set completed sub lower valve body assembly aside for final valve body assembly, as shown in Figure 162.
9. Disassemble the lower valve body, as shown in Figure 163, and place the valves, bore plugs and retainers in appropriate trays exactly as they were removed.
10. Clean lower valve body parts thoroughly and dry with compressed air.
11. Assemble lower valve body parts exactly as they are shown in Figure 163, and lube with proper ATF as they are installed.
    Note: Install the retainers exactly as shown in Figure 163, as they install in different directions through out the valve body.
12. Install the flat valve body screen into position as shown in Figure 163.

Continued on Page 91

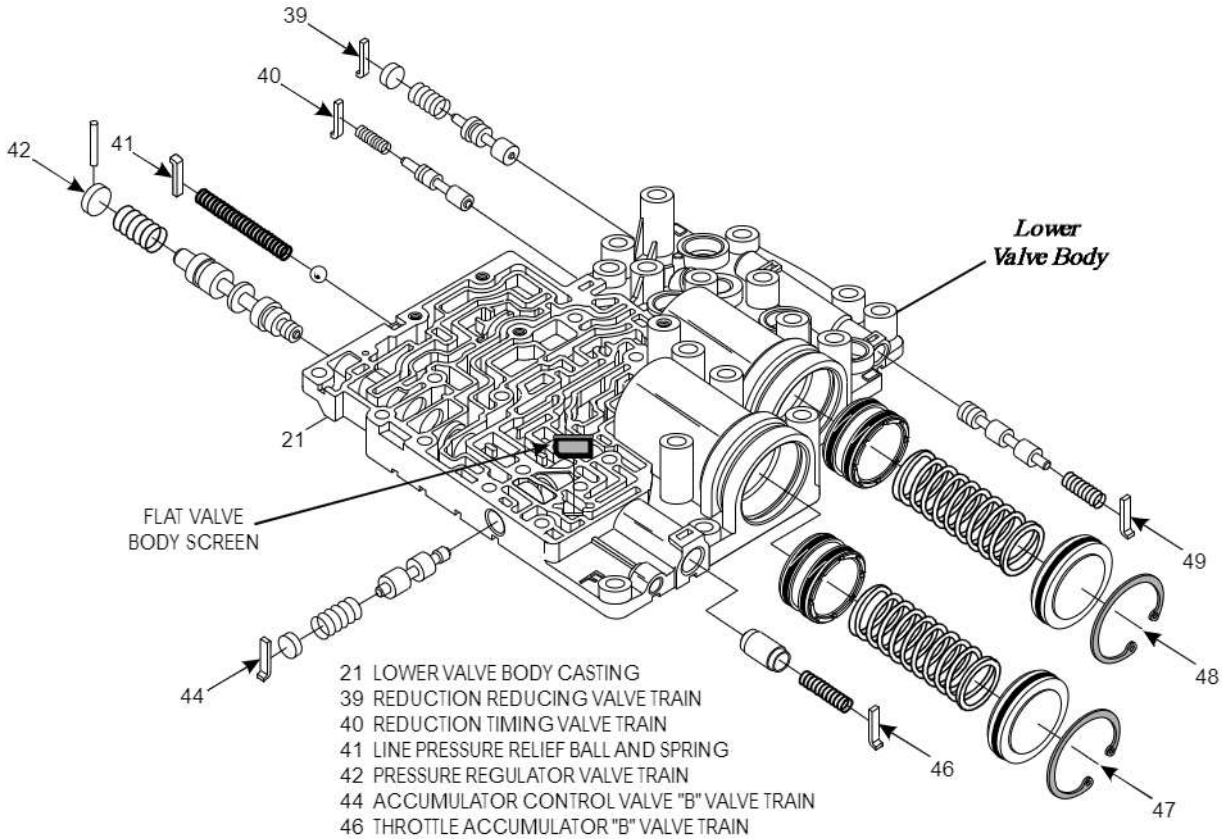

Copyright © 2008 ATSG

Figure 163

Valve Body Assembly (Cont'd)

13. Install two new scarf-cut seal rings on both the high and the low clutch accumulator pistons, as shown in Figure 164, and ensure the scarf-cut is configured properly.
14. Lubricate both pistons and seals with a small amount of the proper ATF and install them into the bores, as shown in Figure 163.
15. Install new "O" ring on both the high and the low clutch accumulator covers, as shown in Figure 164, and lube with small amount of the proper ATF for thr vehicle.
16. Install both high and low clutch accumulator springs, that were previously labeled, in their proper positions, as shown in Figure 163.
17. Install high clutch accumulator cover, using care so as not to damage the "O" ring.
18. Compress the cover and install the snap ring shown in Figure 163.
19. Install low clutch accumulator cover, using care so as not to damage the "O" ring.
20. Compress the cover and install the snap ring shown in Figure 163.
21. Ensure that the flat valve body screen is still in place, as shown in Figure 165, and set the completed lower valve body aside for the final valve body assembly process.

Continued on Page 92

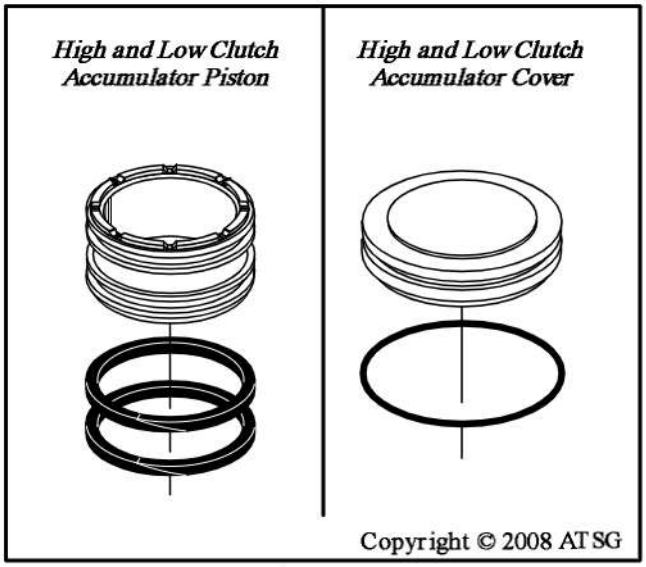

Figure 164

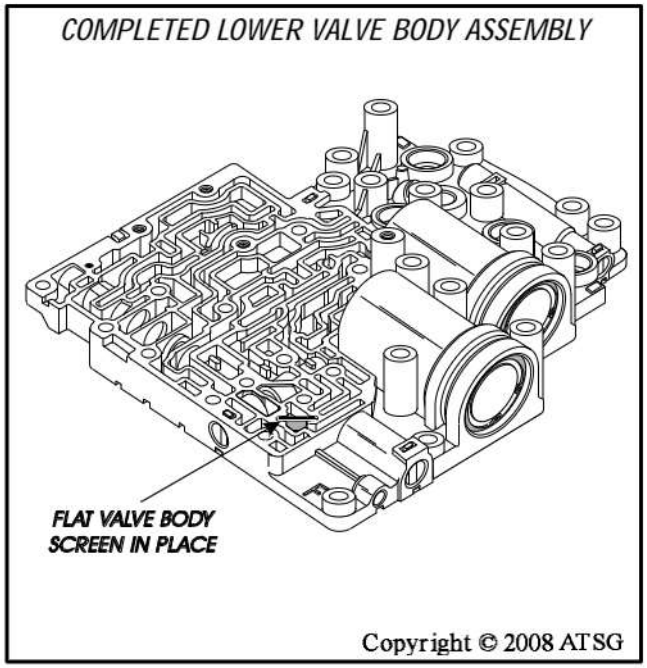

Figure 165

A very hearty "Thank You" to Frank Kuperman of Phoenix Remanufactured Transmissions for supplying us with the transaxles that made this manual possible.

PHXRETRANS
Phoenix Remanufactured Transmissions

(623) 936-1500
7310 W. Roosevelt #26
Phoenix, AZ 85043
www. phoenixhardparts.com

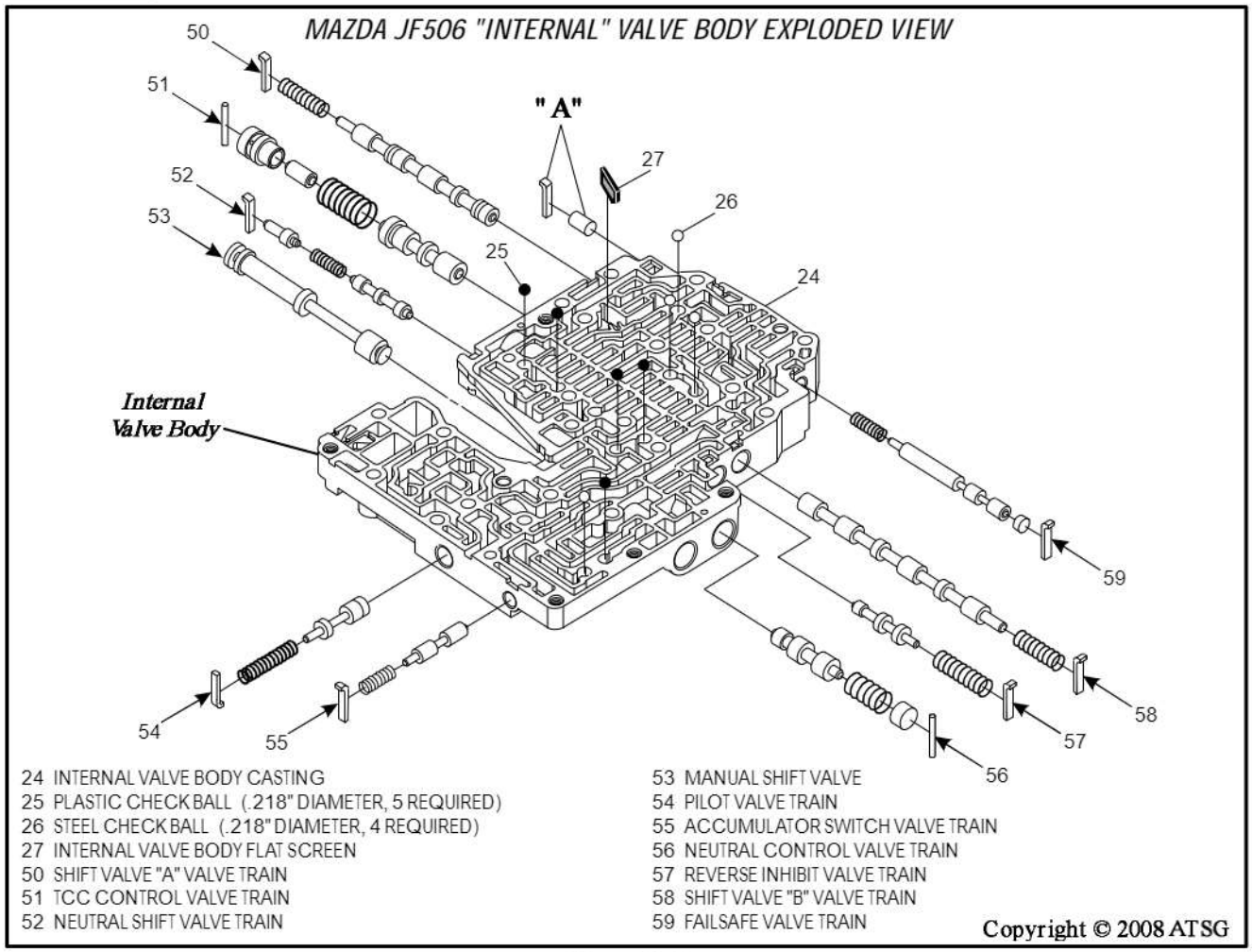

Figure 166

Valve Body Assembly (Cont'd)

22. Disassemble the internal valve body, as shown in Figure 166, and place valves, bore plugs and retainers in appropriate trays exactly as they were removed from casting.
    Note: There is no need to remove the bore plug and retainer identified with an "A" in Figure 166, as the valve is removed from opposite side.
23. Clean all internal valve body parts thoroughly and dry with compressed air.
24. Assemble internal valve body parts exactly as they are shown in Figure 166, and lube with the proper ATF as they are installed.
    Note: Install the retainers exactly as shown in Figure 166, as they install in different directions through out the valve body.
25. Install the flat valve body screen into position, as shown in Figure 166.
    Note: There are two of these flat screens in the Mazda units.
26. Install the manual valve into the internal valve body in the direction shown in Figure 166.
27. Install an appropriate size clevis pin into the groove in the exposed end of manual valve, as shown in Figure 167.
    Note: This is a temporary measure that will assist in installing the completed valve body on the unit, as it is a "blind" process. This clevis pin must be removed before the oil pan is installed. This will also keep you from losing the manual valve.

Continued on Page 93

Valve Body Assembly (Cont'd)

28. Install the four steel check balls in their proper positions, as shown in Figure 168.
29. Install the five plastic check balls in their proper positions, as shown in Figure 168.
30. Ensure that the flat screen is still in position, as shown in Figure 169, and set the completed internal valve body assembly aside for final valve body assembly.
    Note: Set aside with the check ball side facing up so as not to lose the check balls.

Continued on Page 94

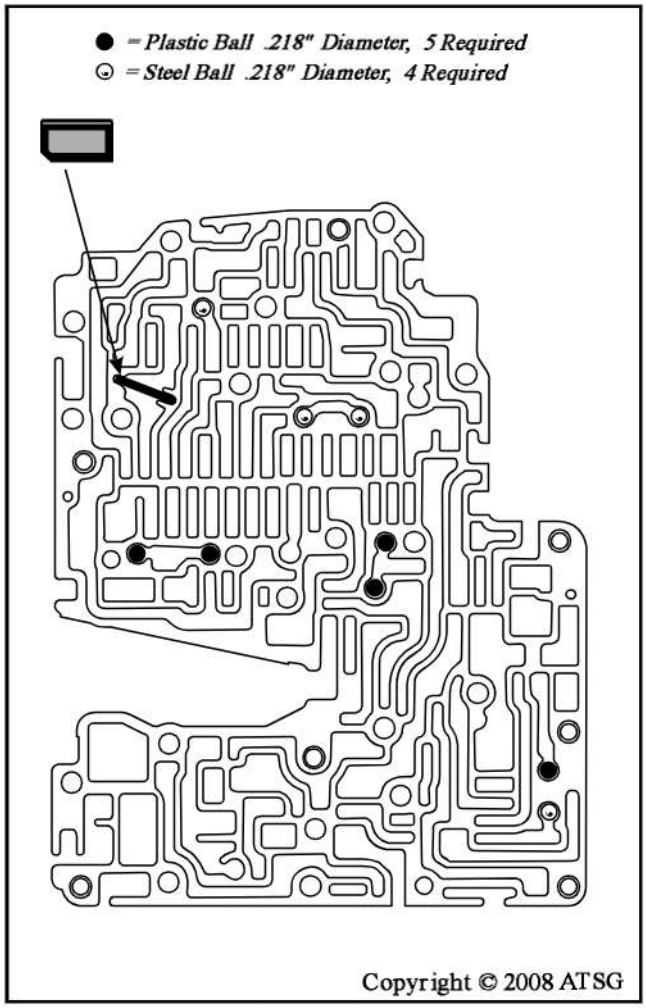

Figure 168

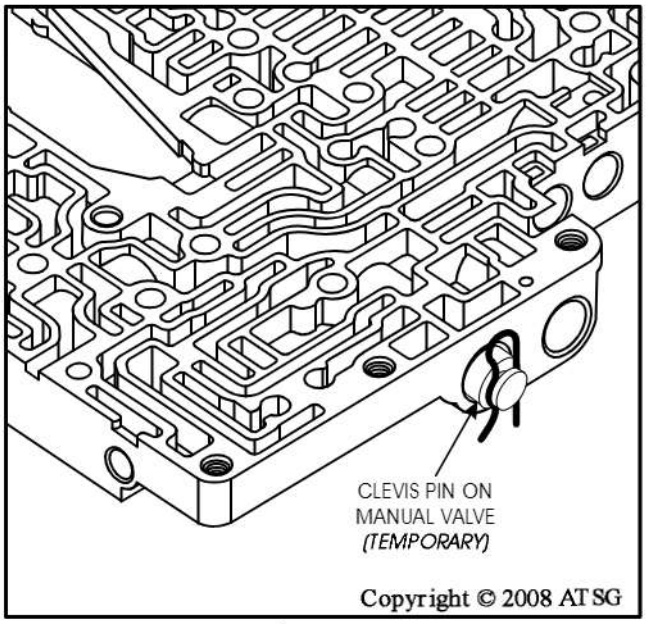

Figure 167

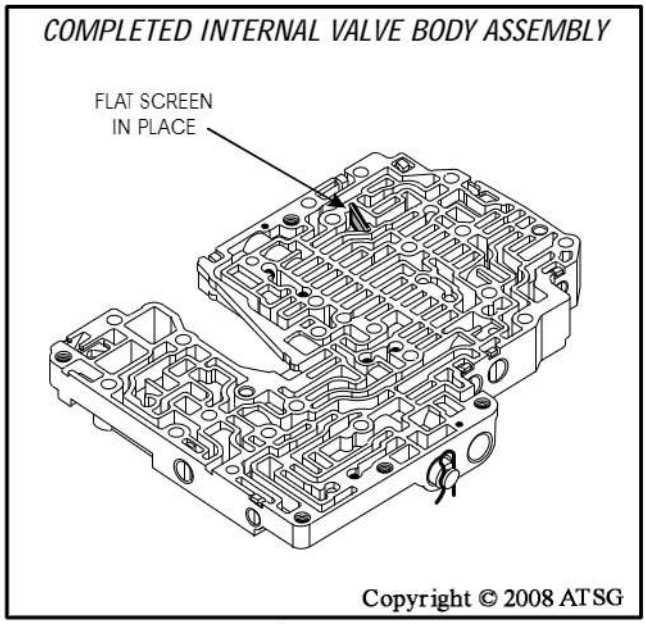

Figure 169

Valve Body Assembly (Cont'd)

31. Install one 67mm bolt and one 90mm valve body bolt through the upper valve body casting as shown in Figure 171.
    Note: The holes in components that these bolts go through have a very close tolerance and act much like alignment dowels.
32. Lay the assembly on a flat work surface with the worm track side facing up, as shown in Figure 171.
33. Install four plastic check balls in their proper locations, as shown in Figure 170.
34. Install spacer plate "C" with bonded gaskets over the two bolts and onto the upper valve body, as shown in Figure 171.
35. Install the completed internal valve body over the two bolts and onto spacer plate "C", as shown in Figure 171, and ensure flat screen and check balls are still in position.
    Note: Do not remove the clevis pin from manual valve at this time.
36. Install spacer plate "B" over the two bolts, as shown in Figure 171.
    Note: There are "No" gaskets used with spacer plate "B".

Continued on Page 95

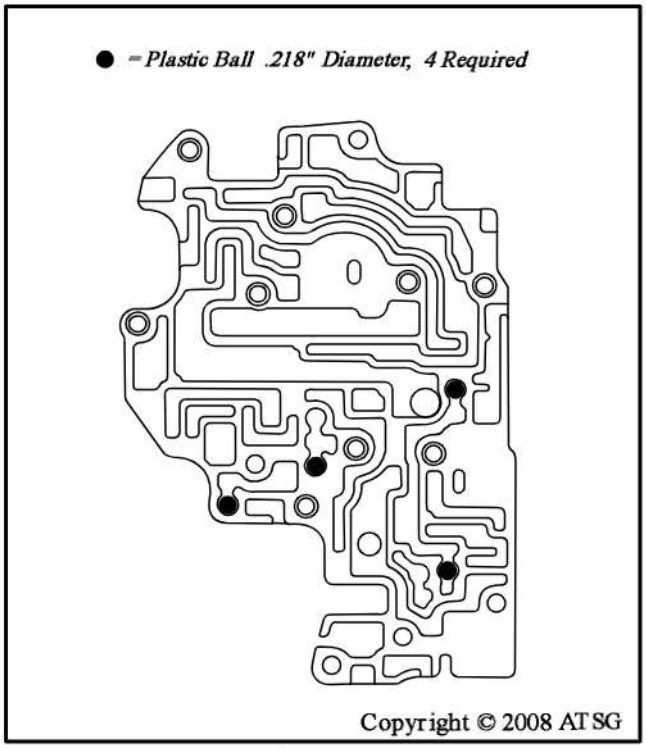

Figure 170

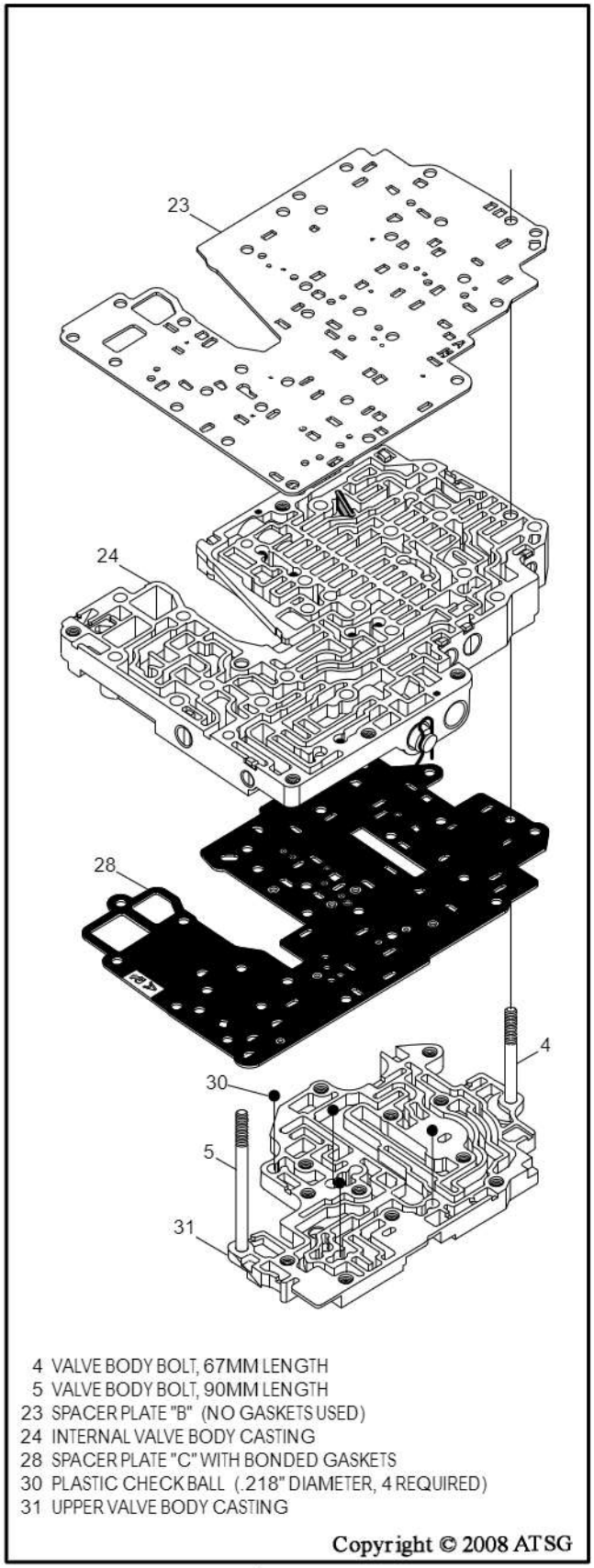

Figure 171

Valve Body Assembly (Cont'd)

37. Install completed lower valve body assembly over the two bolts, on top of spacer plate "B", as shown in Figure 172, and ensure that flat valve body screen is still in place.
38. Install the two tapered coil spring loaded filters into their pockets in the lower valve body, with the spring side down, as shown in Figure 173.
39. Install spacer plate "A" with bonded gaskets over one bolt onto the lower valve body, as shown in Figure 173.
    Note: Ensure that the two spring loaded filters engage into the square holes in spacer plate "A" as it is lowered into place.
40. Install the pilot filter with the "leaf spring" facing up, and the wide leg of the "leaf spring" facing the bottom of valve body, as shown in Figure 173.
    Note: This filter must also engage into square hole in spacer plate "A".

Continued on Page 96

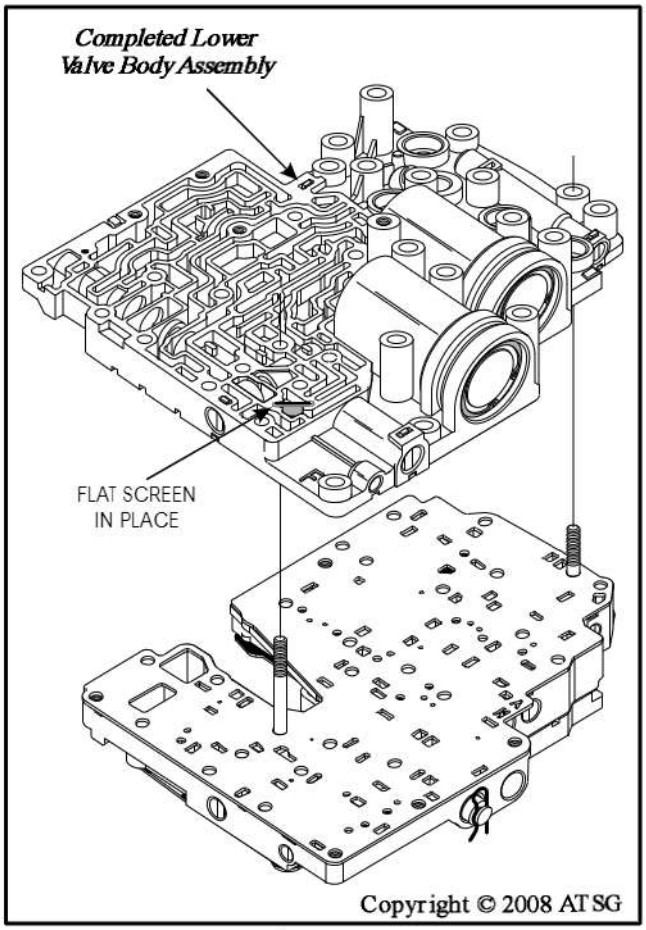

Figure 172

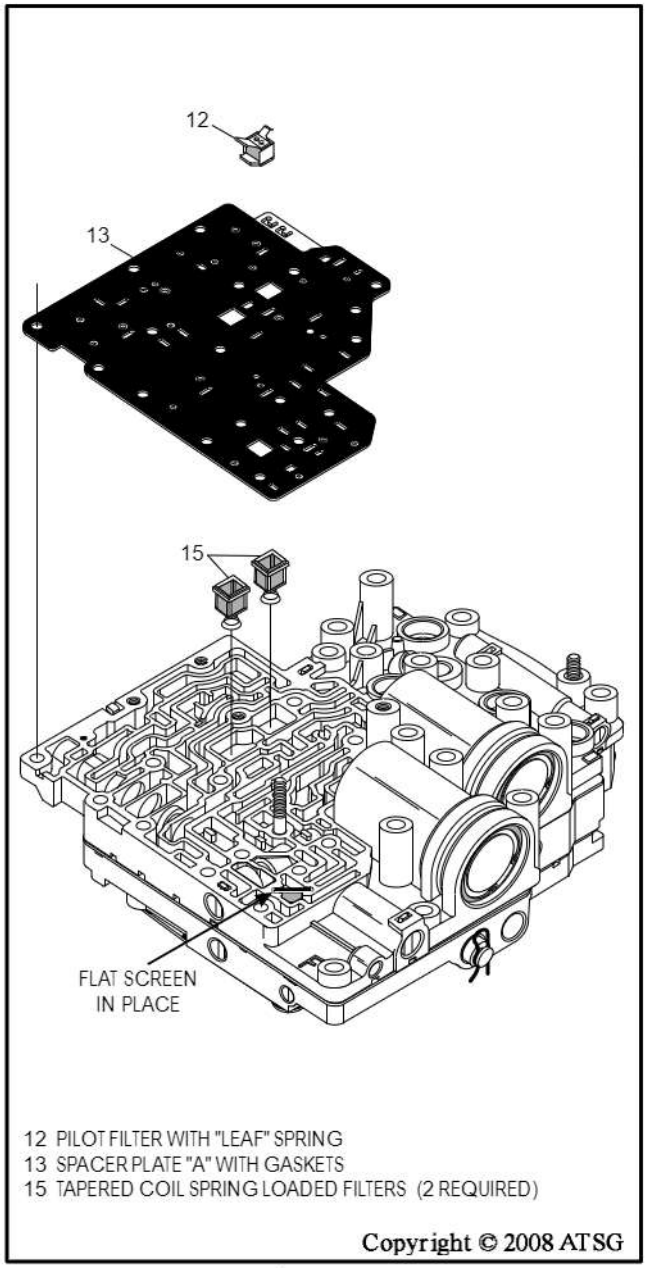

Figure 173

Valve Body Assembly (Cont'd)

41. Install the completed sub lower valve body over the bolt and on top of spacer plate "A", as shown in Figure 174.
    Note: Check once again that all three filters are engaged in spacer plate holes.
42. Install the valve body bracket over bolt and on top of the sub lower valve body, as shown in Figure 174.
43. Install 90mm valve body bolt through bracket, as shown in Figure 174, and hand tighten only at this time.
44. Install nut on the 90mm bolt coming through from the bottom, as shown in Figure 174, and hand tighten only at this time.
45. Install a 37mm bolt (2), from the bottom, in the lower left side of the valve body, as shown in Figure 175, install nut (3) and hand tighten only at this time.
46. Install six 37mm bolts (2), in locations shown in Figure 175, and hand tighten only.
    Note: One of these bolts has a internal wire harness retainer (61).
47. Install one 24mm bolt (6), in location shown in Figure 175, and hand tighten only.
48. Install one 67mm bolt (4), in location shown Figure 175, and hand tighten only.
49. Install the 106.5mm bolt (65), along with the wire harness retainer (62), in location shown Figure 175, and hand tighten only.

Continued on Page 97

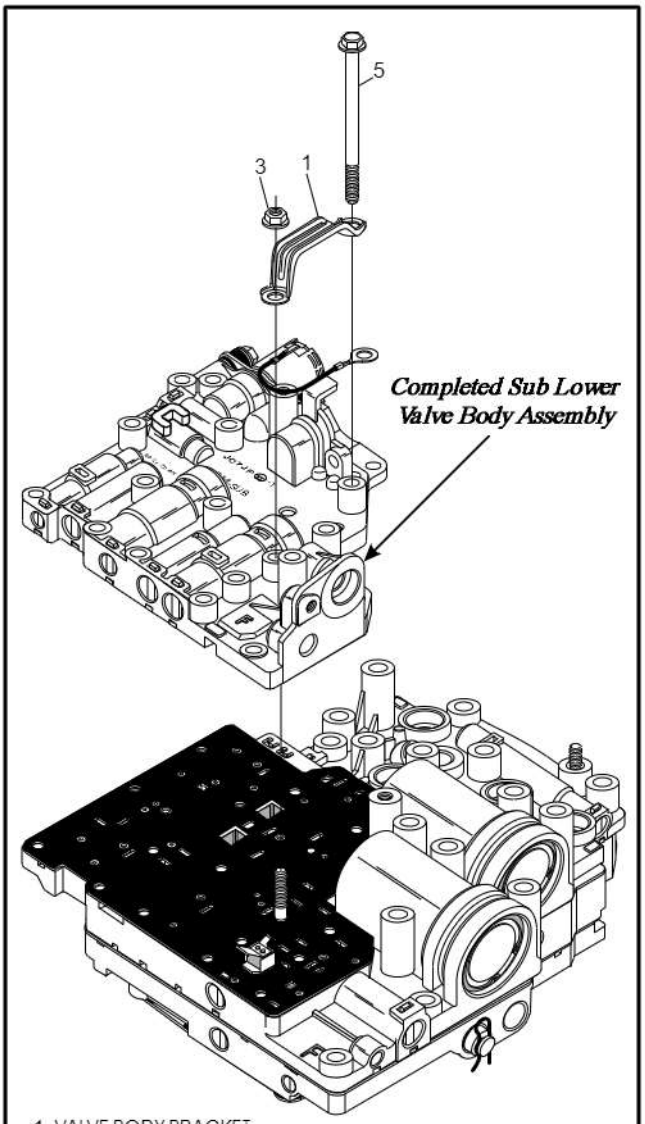

1 VALVE BODY BRACKET
3 NUT FOR VALVE BODY BOLT FROM BOTTOM
5 VALVE BODY BOLT, 90MM LENGTH

Copyright © 2008 ATSG

Figure 174

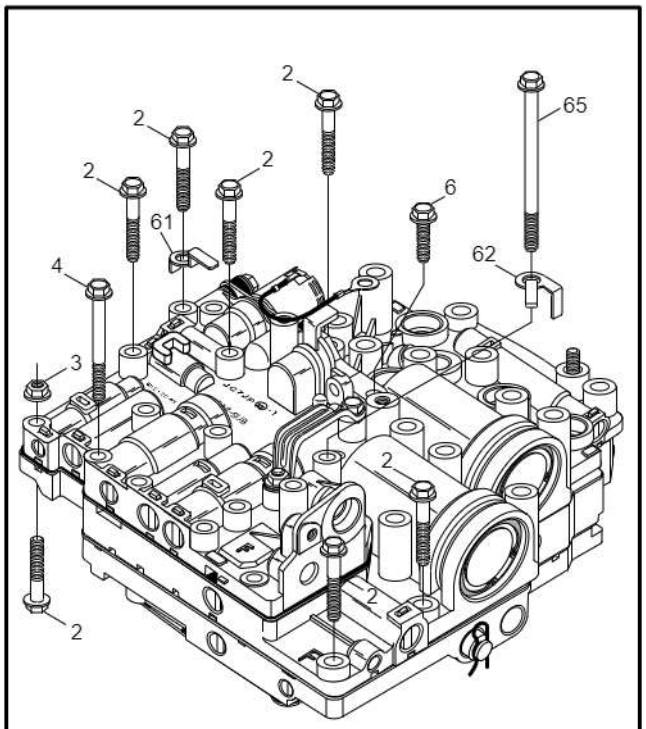

2 VALVE BODY BOLT, 37MM LENGTH
3 NUT FOR VALVE BODY BOLT FROM BOTTOM
4 VALVE BODY BOLT, 67MM LENGTH
6 VALVE BODY BOLT, 24MM LENGTH
61 INTERNAL SOLENOID WIRE HARNESS CLIP
62 INTERNAL SPEED SENSOR WIRE HARNESS CLIP
65 VALVE BODY BOLT, 106.5MM LONG (GOLD IN COLOR)

Copyright © 2008 ATSG

Figure 175

Valve Body Assembly (Cont'd)

50. Install a 67mm bolt in the location shown in Figure 176, and hand tighten only.
51. Install four 90mm bolts in the locations shown in Figure 176, and hand tighten only.

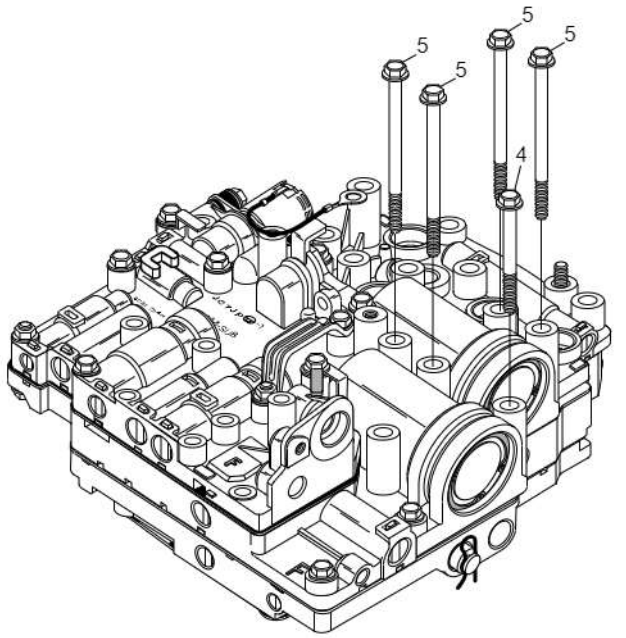

4 VALVE BODY BOLT, 67MM LENGTH
5 VALVE BODY BOLT, 90MM LENGTH

Copyright © 2008 ATSG

Figure 176

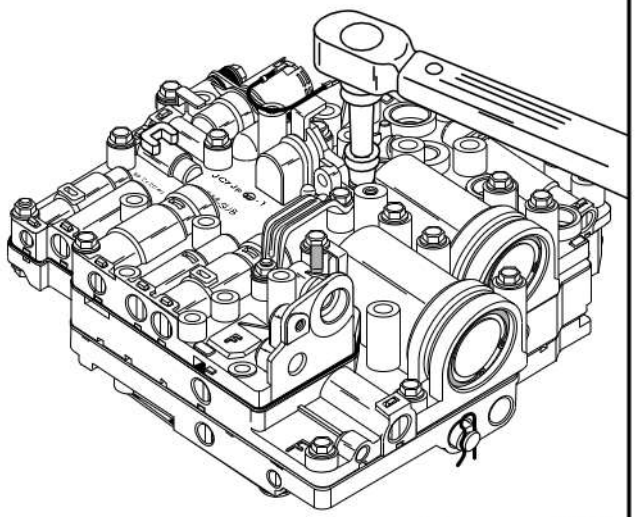

Copyright © 2008 ATSG

Figure 177

52. Install the eleven valve body to case bolts in their proper holes for alignment purposes. ***Note: These are the silver bolts, and on the Mazda, one is longer than all the others.***
53. Beginning in the center and working your way outward, torque all installed valve body bolts to 10 N·m (90 in.lb.), as shown in Figure 177. ***Note: For the two nuts, you may have to hold bolt from the back side with a wrench.***
54. Now you can remove the eleven silver valve body to case bolts used for alignment.
55. Install the high clutch solenoid and the brass retaining bracket, using two 24mm bolts, as shown in Figure 178. ***Note: High Clutch Solenoid should check at 2.6 to 3.2 Ohms resistance.***
56. Torque the two retaining bracket bolts to, 10 N·m (90 in.lb.).

Continued on Page 98

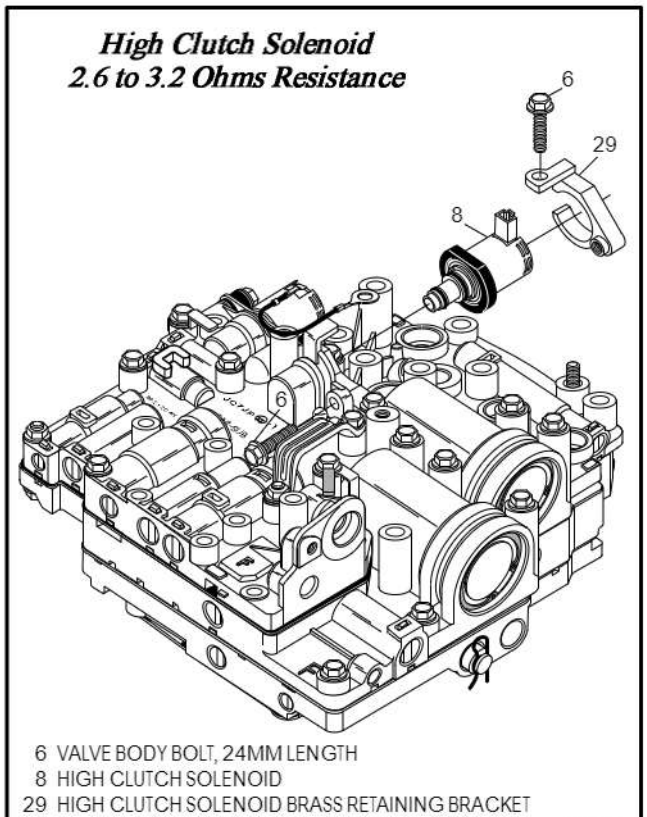

6 VALVE BODY BOLT, 24MM LENGTH
8 HIGH CLUTCH SOLENOID
29 HIGH CLUTCH SOLENOID BRASS RETAINING BRACKET

Copyright © 2008 ATSG

Figure 178

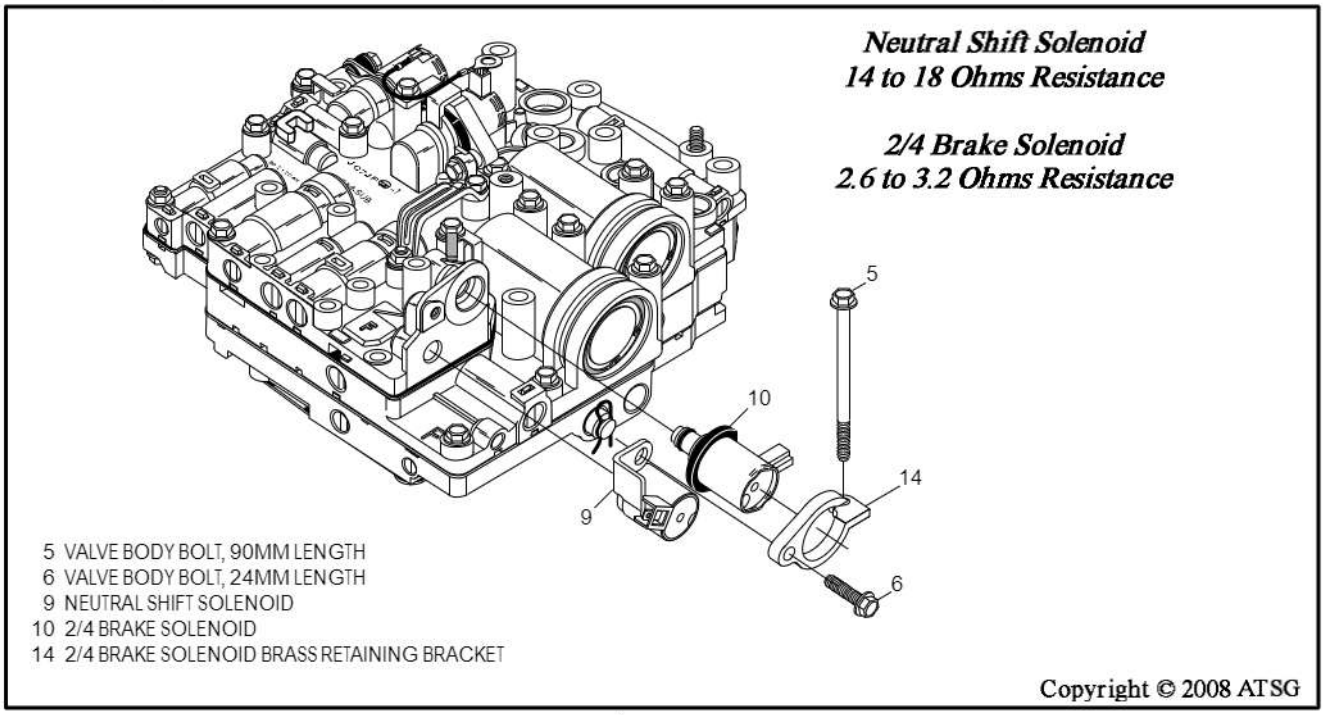

Figure 179

Valve Body Assembly (Cont'd)

57. Install new "O" ring, lube with ATF, and install neutral shift solenoid into the valve body, as shown in Figure 179.
    Note: Neutral Shift Solenoid should check at 14 to 18 Ohms resistance.
58. Install new "O" rings on the 2-4 brake solenoid and lube with the proper ATF.
    Note: 2-4 Brake Solenoid should check at 2.6 to 3.2 Ohms resistance.
59. Assemble the brass retaining bracket onto the 2-4 brake solenoid, and install both pieces as an assembly onto the valve body, as shown in Figure 179.
60. Install one 90mm bolt and one 24mm bolt in the positions shown in Figure 179.
61. Install new "O" rings, lube with small amount of proper ATF, and install shift solenoid "A" into the valve body, using a 67mm bolt, as shown in Figure 180.
    Note: Shift Solenoid "A" should check at 14 to 18 Ohms resistance.
62. Hand tighten only the 67mm bolt at this time.

Continued on Page 99

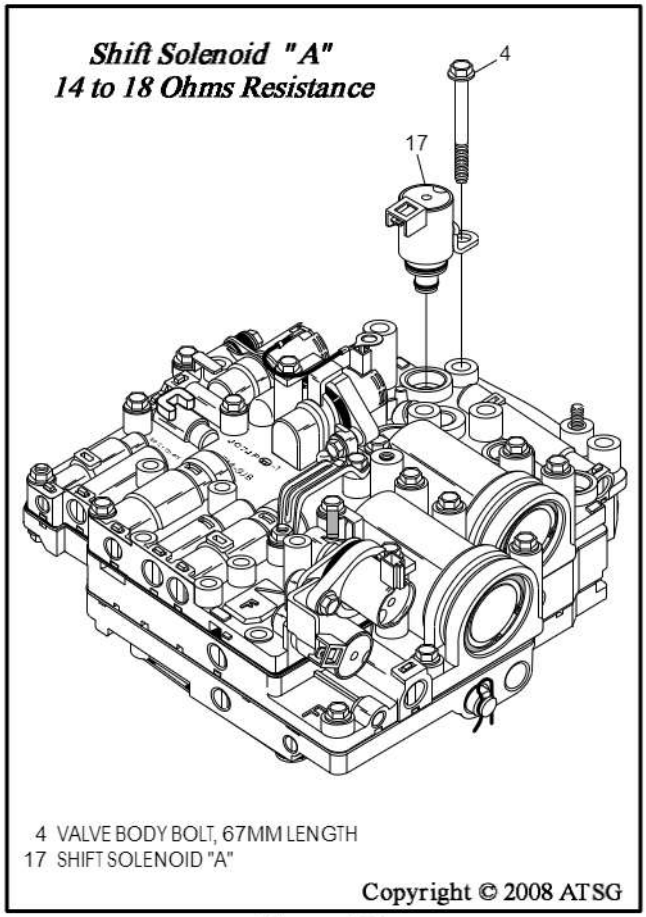

Figure 180

Valve Body Assembly (Cont'd)

63. Install new "O" ring, lube with ATF, and install reduction timing solenoid into the valve body, as shown in Figure 181.
    Note: Reduction Timing Solenoid should check at 14 to 18 Ohms resistance.
64. The reduction timing solenoid is "stacked" with TCC solenoid and goes in first, as shown in Figure 181.
65. Install new "O" rings on the TCC solenoid and lube with the proper ATF.
    Note: TCC Solenoid should check at 12 to 13.2 Ohms resistance.
66. Ensure that all mounting bushings are in place and install the TCC solenoid into valve body as shown in Figure 181.
67. Install the 105.5mm bolt, black in color, thru both TCC and reduction timing solenoids, as shown in Figure 181.
68. Install the 75mm bolt, black in color, and place it through ground wire terminal for the pressure control solenoid, as shown in Figure 181.
69. Install the 24mm bolt and hand tighten only, as shown in Figure 181.
70. Install new "O" rings, lube with small amount of proper ATF, and install shift solenoid "B" into the valve body, using a 67mm bolt, as shown in Figure 182.
    Note: Shift Solenoid "B" should check at 14 to 18 Ohms resistance.
71. Hand tighten only the 67mm bolt at this time.

Continued on Page 100

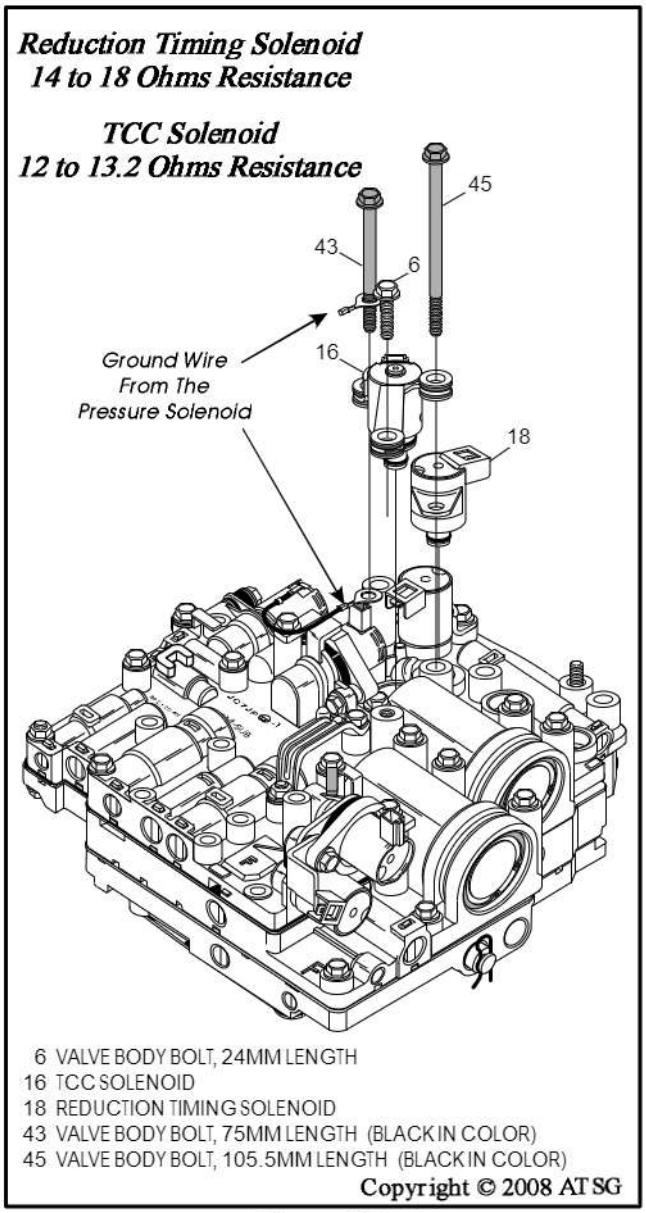

Figure 181

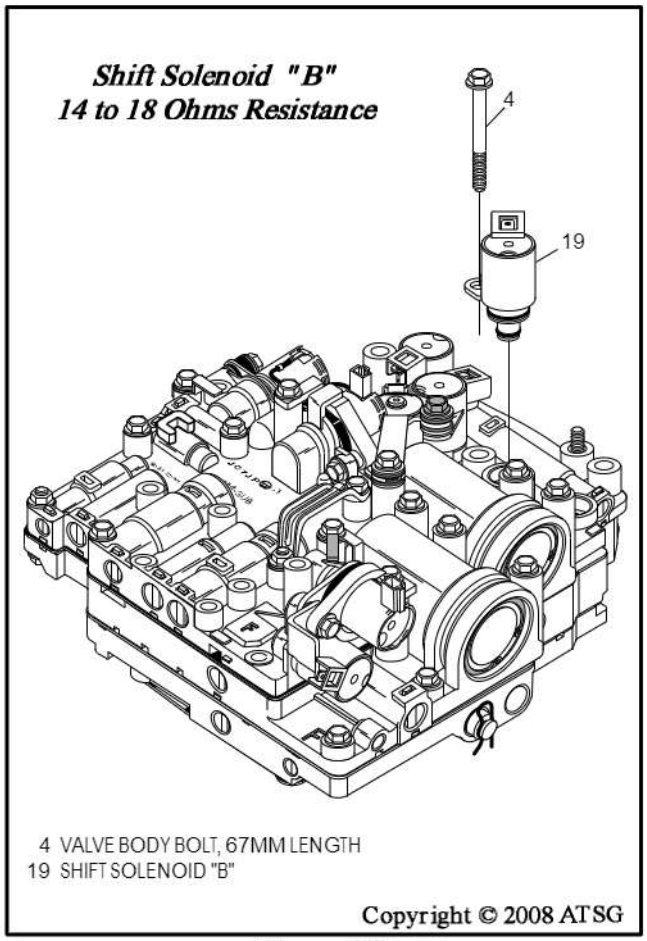

Figure 182

VALVE BODY ASSEMBLY (CONT'D)

72. Install new "O" rings, lube with small amount of proper ATF, and install shift solenoid "C" into the valve body, as shown in Figure 183.
Note: Shift Solenoid "C" should check at 14 to 18 Ohms resistance.
73. Shift solenoid "C" is bolted in the valve body using a nut on the 67mm bolt from the bottom and one 90mm long valve body to case bolt (Silver in color), as shown in Figure 183.
Note: Use the 90mm valve body to case bolt for alignment only while torquing.
74. Now, you can torque the remaining solenoid retaining bolts to 10 N·m (90 in.lb.), as shown in Figure 184.
75. Set the completed valve body assembly aside, as shown in Figure 185, for the final transaxle assembly process.
Note: Notice in Figure 185, the clevis pin is still in place and must remain there until the valve body is installed onto the case, plus you haven't lost the manual valve yet.

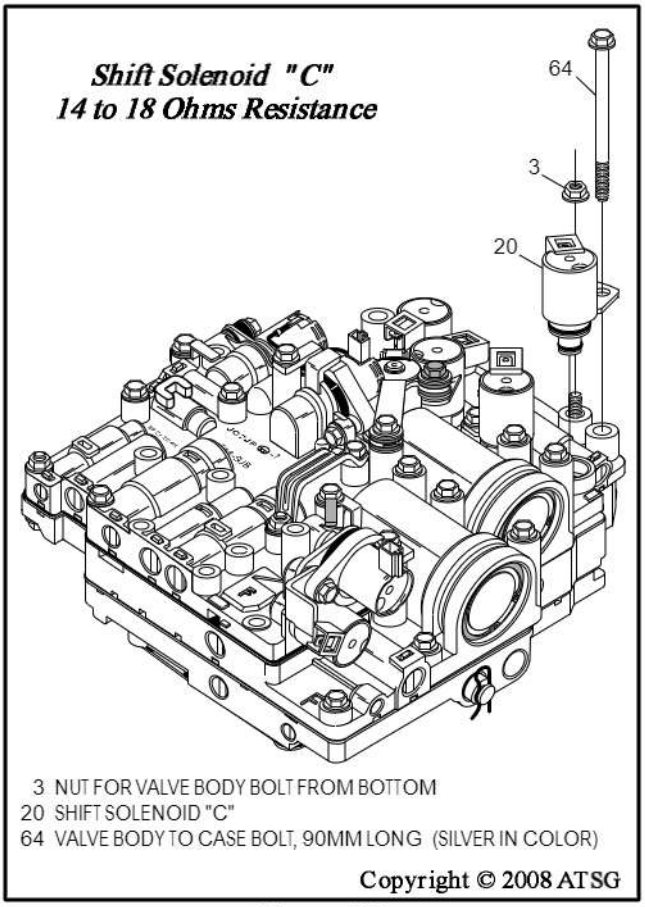

Figure 183

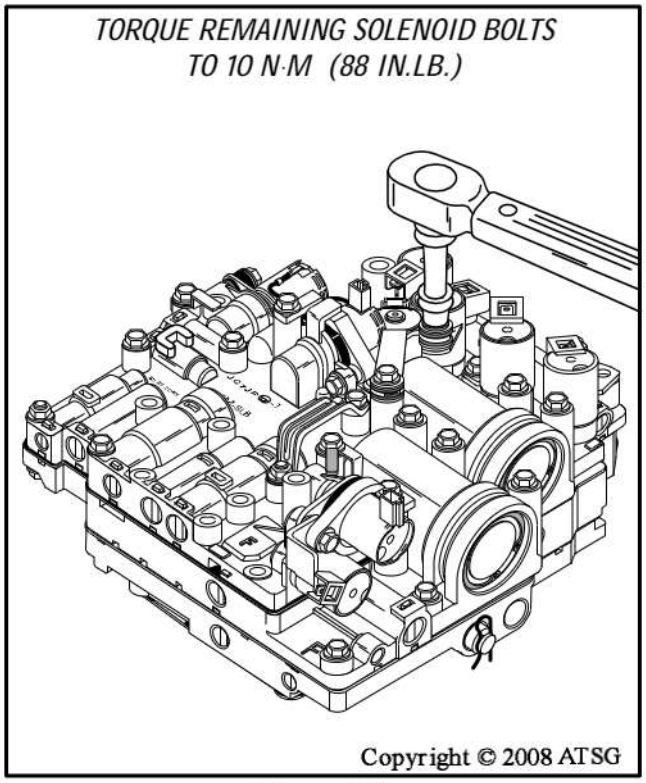

Figure 184

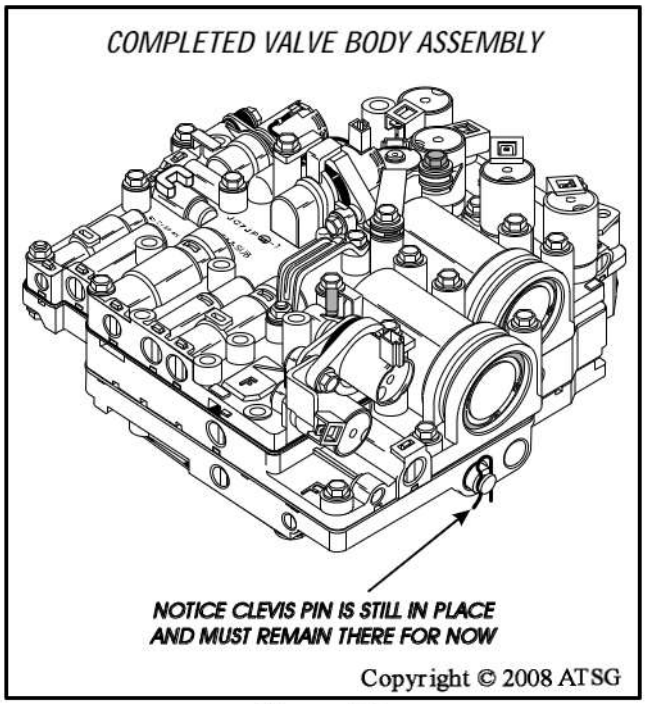

Figure 185

FINAL TRANSAXLE ASSEMBLY

Rear Internal Parts

1. Install the low roller clutch assembly into the case, as shown in Figure 186, with the narrow lug to the narrow case groove.
2. Install the retaining snap ring into the case, as shown in Figure 186.
   Note: Snap ring opening "must" be placed as shown in Figure 187.
3. Install the number 2 thrust bearing on support, as shown in Figure 186, and retain with small amount of Trans-Jel®.
   Note: Lubricate all bearings with the proper fluid for the vehicle, before installation.
4. Install the low/reverse clutch stepped backing plate, as shown in Figure 188.
   Note: Flat side faces up, step faces down, as shown in Figure 188.

Continued on Page 102

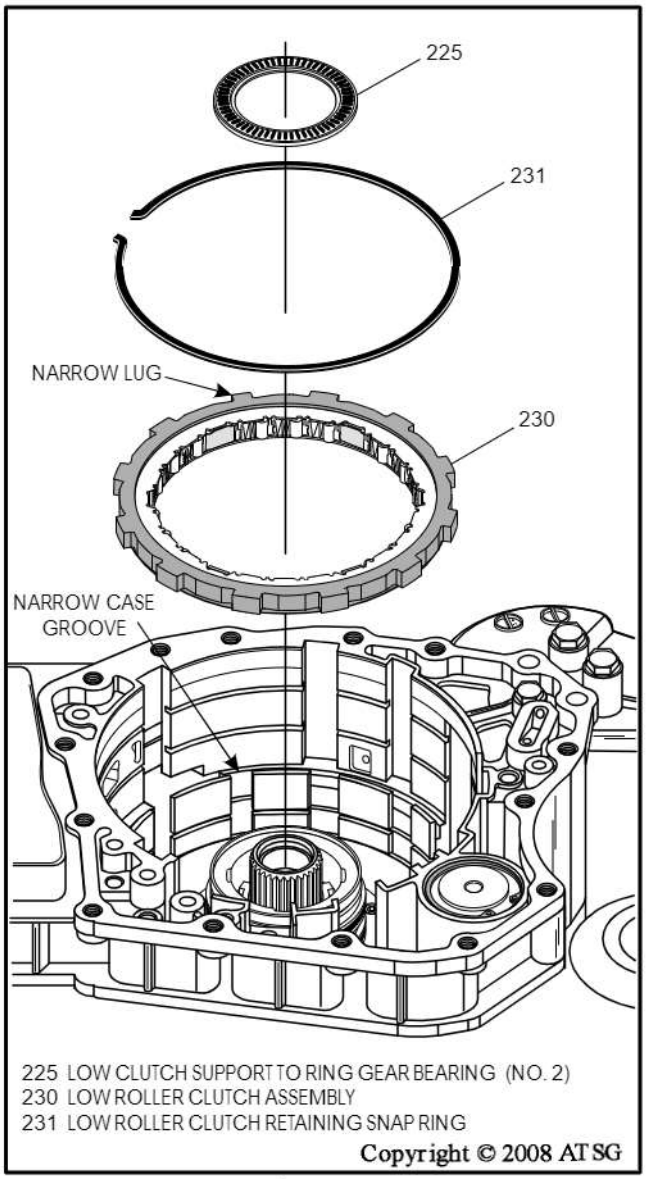

Figure 186

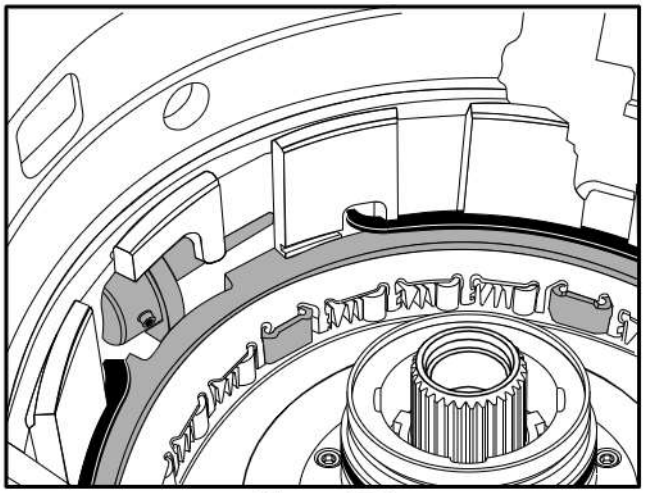

Figure 187

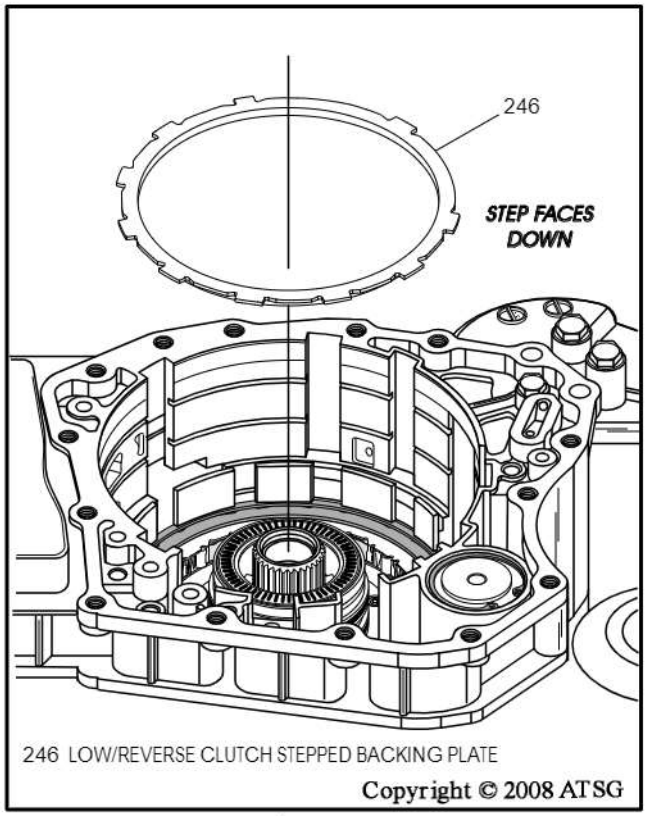

Figure 188

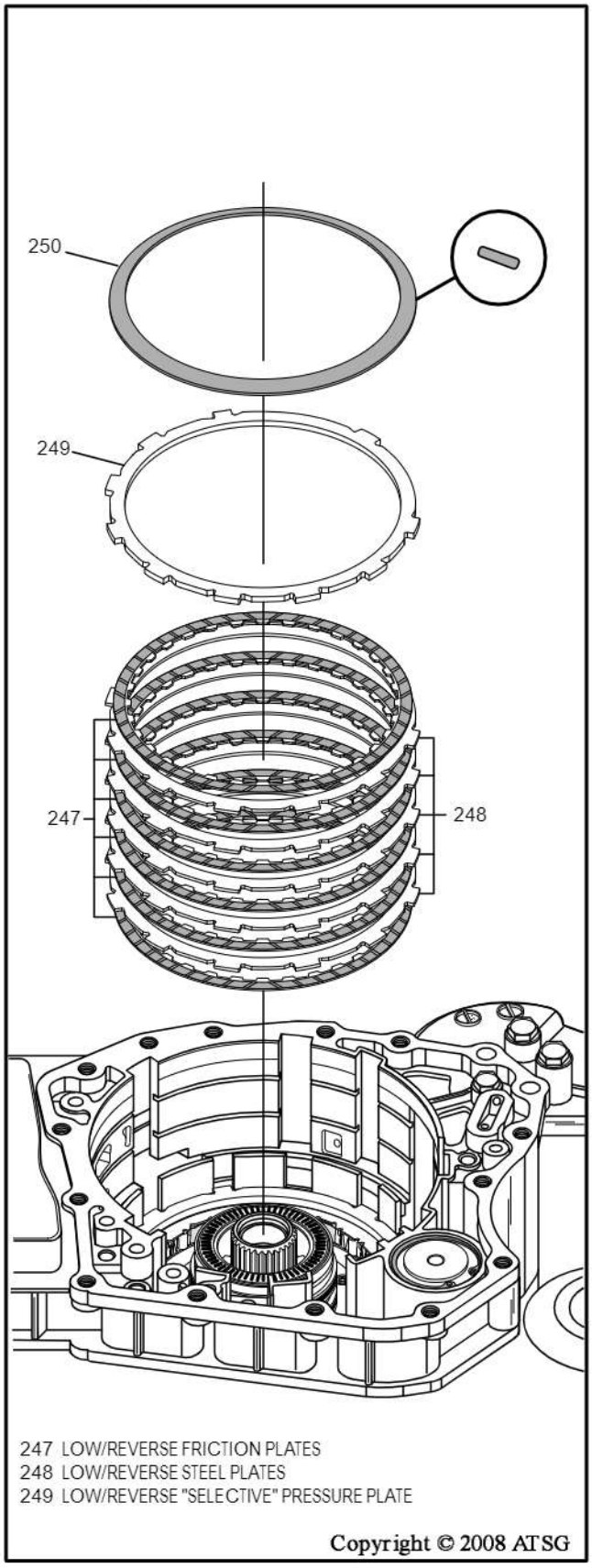

Figure 189

FINAL TRANSAXLE ASSEMBLY (CONT'D)

Rear Internal Parts (Cont'd)

5. Install the low/reverse clutch plates beginning with a friction plate on top of the backing plate and alternating with steel plates, as shown in Figure 189.
   Note: All clutch plates should be soaked for 30 minutes in the proper fluid for the vehicle before installation.
6. Install the low/reverse clutch selective pressure plate, as shown in Figure 189.
7. Install the low/reverse clutch "cone" cushion plate, as shown in Figure 189, so that outside diameter is resting on pressure plate.
8. Install the low/reverse clutch return spring seat, as shown in Figure 190.
9. Install low/reverse clutch piston return spring, as shown in Figure 190.
10. Install the pre-assembled low/reverse clutch retainer and piston assembly, as shown in Figure 190.
    Note: Tab on retainer must align with the groove shown in case in Figure 190.
11. Install universal compression tool, as shown in Figure 191, and compress the retainer.
    Caution: Compress the retainer only amount needed to install snap ring. Overpressing will damage the retainer edges.
12. Install the low/reverse clutch retainer snap ring, as shown in Figure 190.
    Note: Snap ring orientation must be as shown in Figure 192.

Continued on Page 104

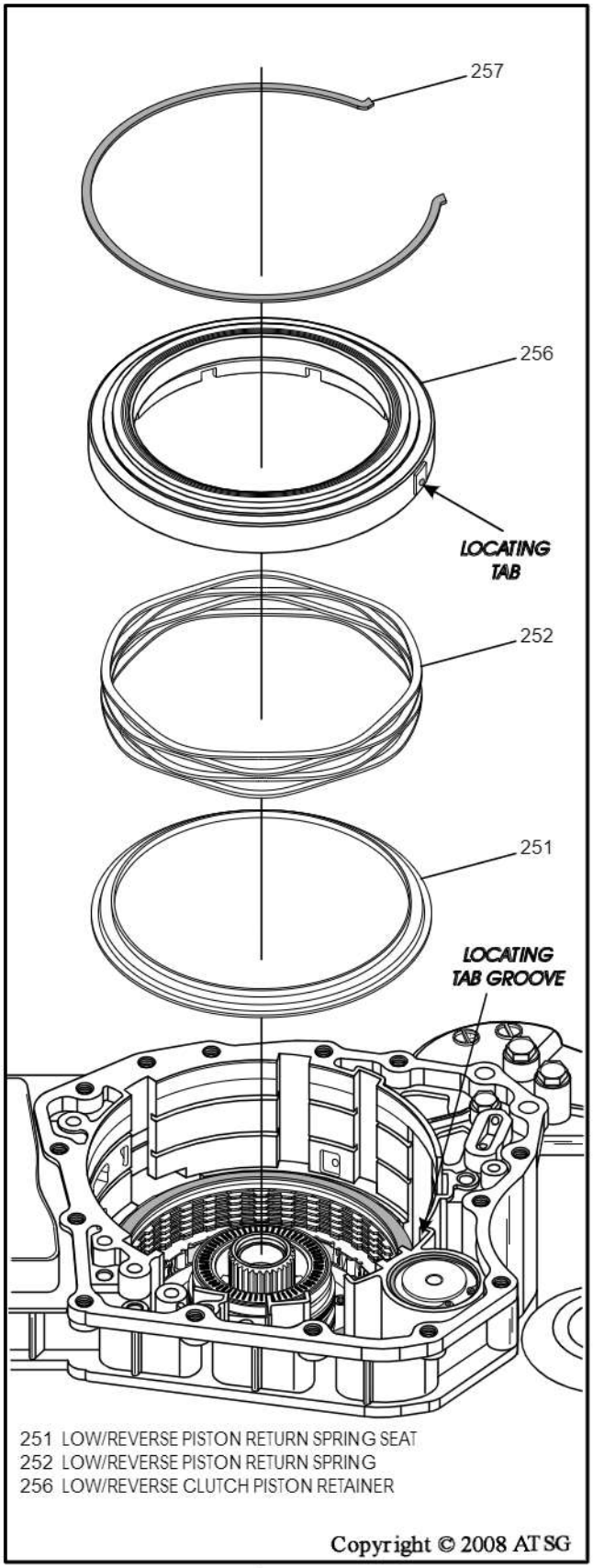

Figure 190

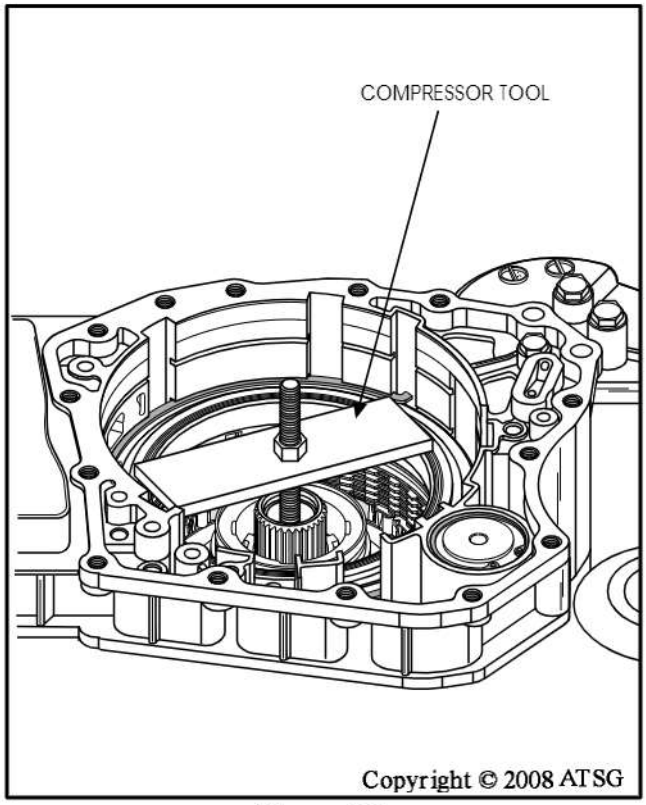

Figure 191

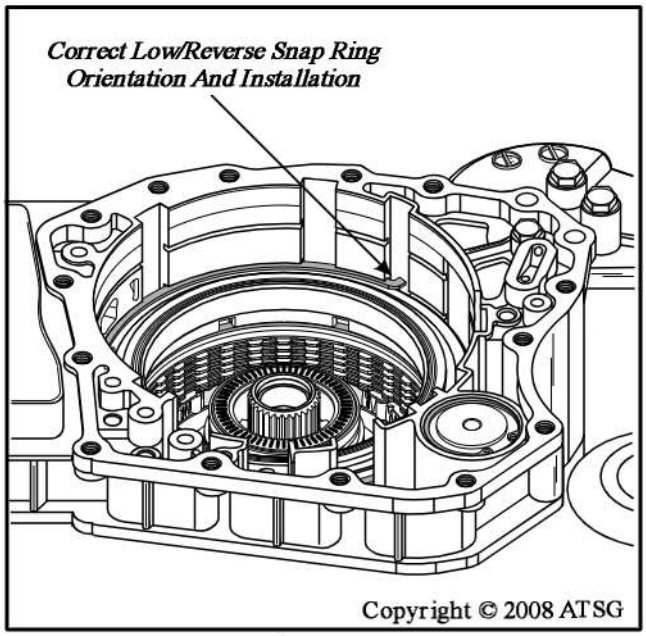

Figure 192

Rear Internal Parts (Cont'd)

13. Measure the low/reverse clutch clearance using feeler gage, as shown in Figure 193, between the pressure plate and top friction.
    Note: Low/reverse clutch clearance should be 0.8mm - 1.1mm (.031" - .043").
14. Change selective pressure plate as necessary using the chart in Figure 193.
15. Install the 2-4 brake clutch backing plate, as shown in Figure 194.
16. Install the 2-4 brake clutch plates beginning with a friction plate and alternating with steel plates, as shown in Figure 194.
    Note: All clutch plates should be soaked for 30 minutes in the proper fluid for the vehicle before installation.
17. Install the pressure plate and selective pressure plate, as shown in Figure 194.
18. Install the 2-4 brake clutch pressure plate snap ring, as shown in Figure 194.
    Note: Snap ring orientation must be as shown in Figure 195.

Continued on Page 105

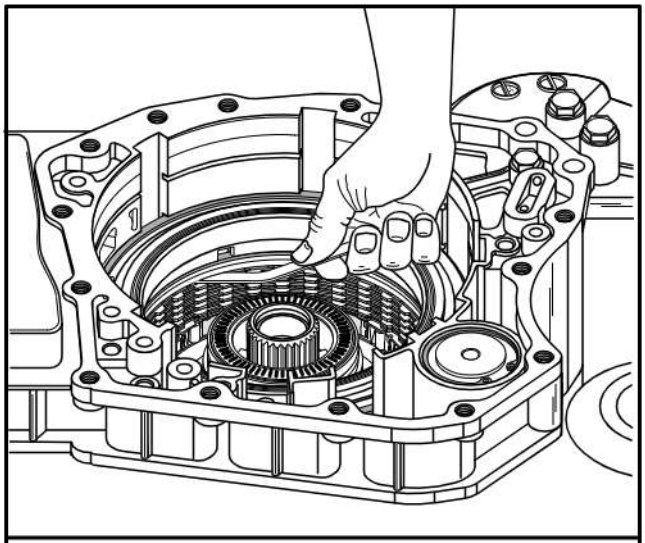

Low/Reverse Clutch Clearance Should Be 0.8mm - 1.1mm (.031" - .043")	
Selective Low/Reverse Clutch Pressure Plates	
2.2mm (.087")	***2.4mm (.094")***
2.6mm (.102")	***2.8mm (.110")***
3.0mm (.118")	

Copyright © 2008 ATSG

Figure 193

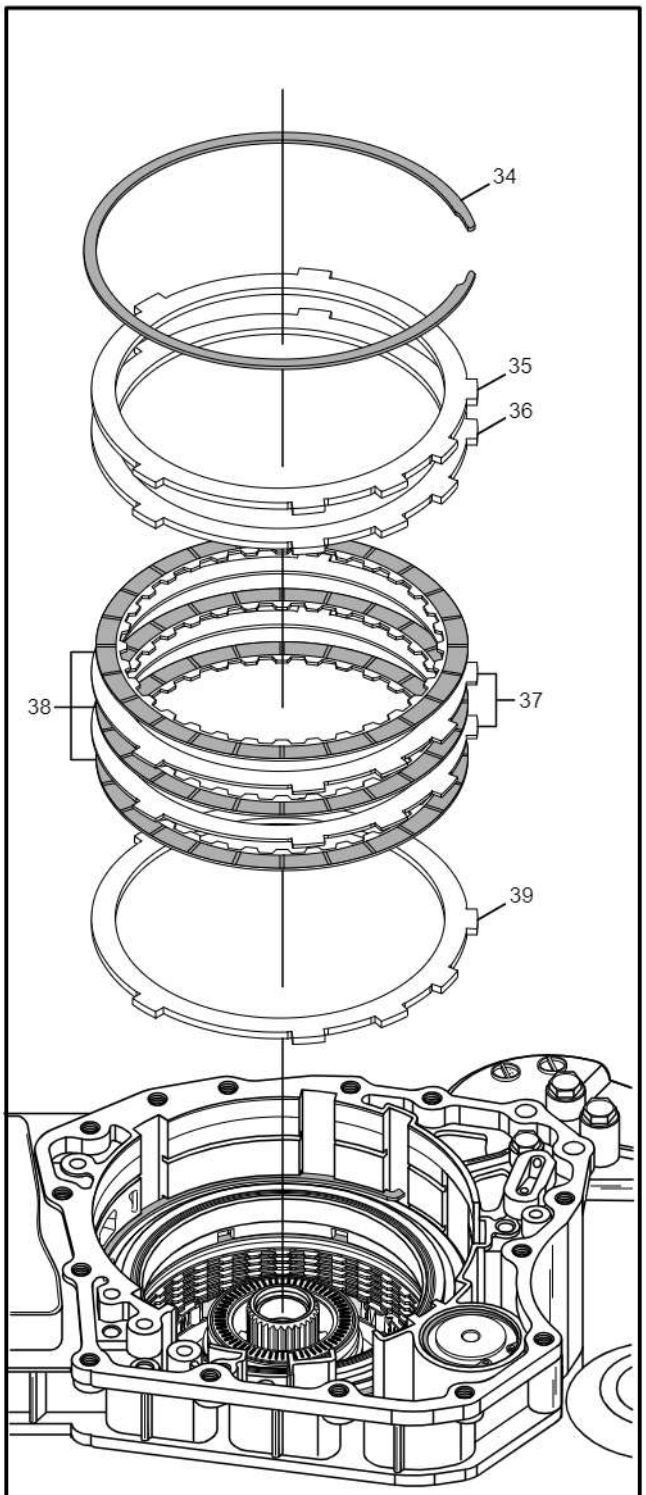

34 2-4 BRAKE CLUTCH SNAP RING
35 2-4 BRAKE CLUTCH "SELECTIVE" PRESSURE PLATE
36 2-4 BRAKE CLUTCH PRESSURE PLATE
37 2-4 BRAKE CLUTCH STEEL PLATES (2 REQUIRED)
38 2-4 BRAKE CLUTCH FRICTION PLATES (3 REQUIRED)
39 2-4 BRAKE CLUTCH BACKING PLATE

Copyright © 2008 ATSG

Figure 194

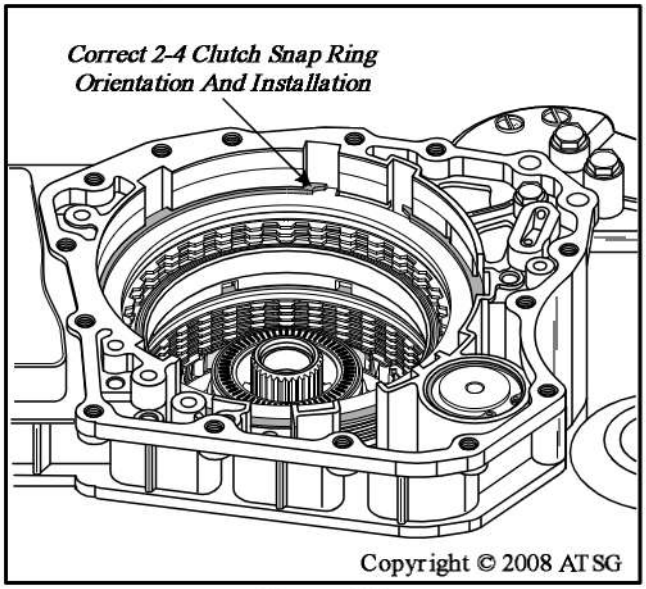

Figure 195

Rear Internal Parts (Cont'd)

19. Measure the 2-4 brake clutch clearance using a feeler gage between the selective pressure plate and snap ring, as shown in Figure 196.
    Note: 2-4 brake clutch clearance should be 0.6mm - 0.9mm (.023" - .035").
20. Change selective pressure plate as necessary using the chart in Figure 196.
21. Ensure that number 1 thrust bearing is still in place on the back side of low clutch housing, and install the low clutch housing by rotating back and forth to engage all low/reverse clutch friction plates and low roller clutch, as shown in Figure 197.
    Note: Ensure that low clutch housing is fully seated in transaxle case.

Continued on Page 106

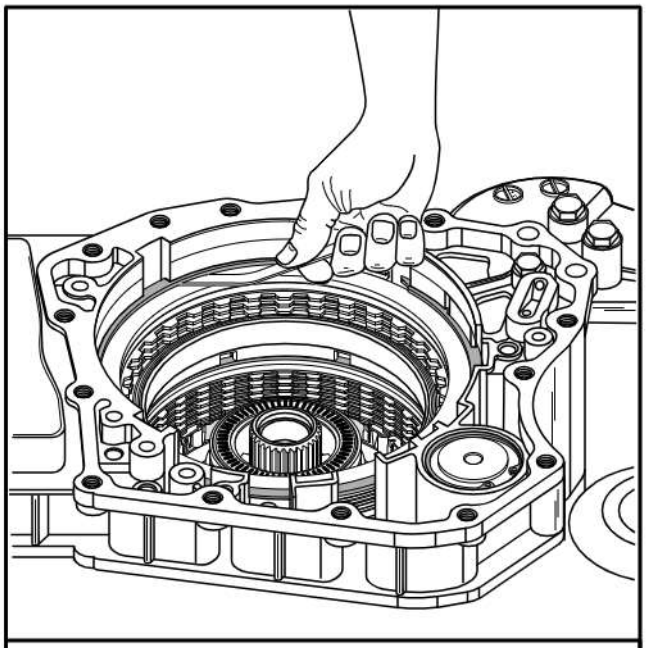

2-4 Brake Clutch Clearance Should Be 0.6mm - 0.9mm (.023" - .035")	
Selective 2-4 Brake Clutch Backing Plates	
3.0mm (.118")	*3.2mm (.126")*
3.4mm (.134")	*3.6mm (.142")*
3.8mm (.150")	*4.0mm (.157")*
4.2mm (.165")	

Copyright © 2008 ATSG

Figure 196

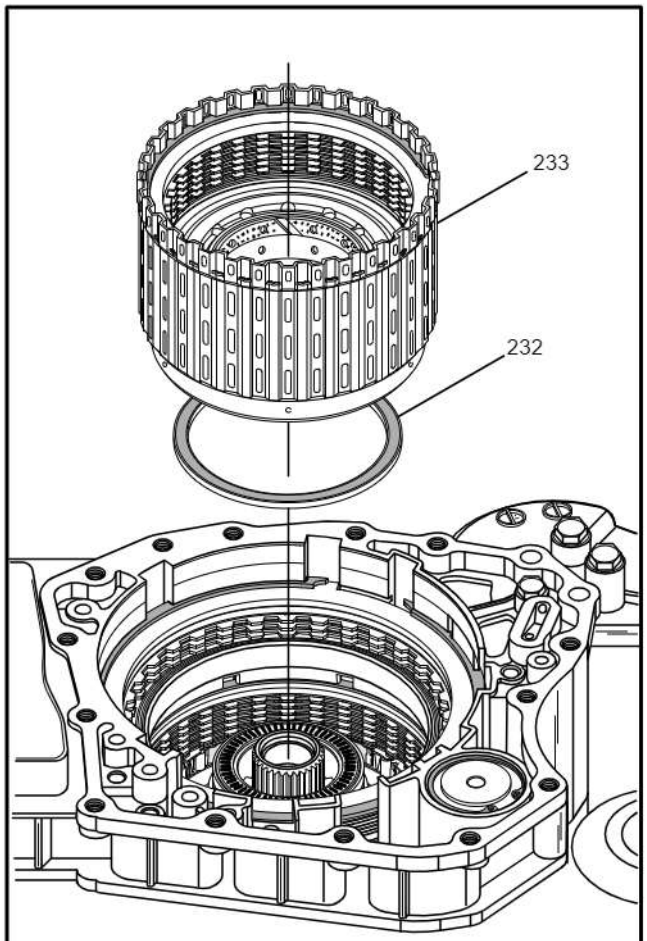

232 LOW CLUTCH HOUSING TO CASE THRUST BEARING (NO. 1)
233 LOW CLUTCH HOUSING ASSEMBLY

Copyright © 2008 ATSG

Figure 197

FINAL TRANSAXLE ASSEMBLY (CONT'D)

Rear Internal Parts (Cont'd)

22. After installation, check the rotation of the low clutch housing, as shown in Figure 198.
    Note: Low clutch housing should freewheel counter-clockwise and lock clockwise, as shown in Figure 198.
23. Ensure that number 2A thrust bearing race and number 3 thrust bearing are still in place on the pre-assembled output ring gear/low clutch hub, as shown in Figure 199.
24. Install the output ring gear/low clutch hub assembly by rotating back and forth to engage all of the low clutch friction plates, as shown in Figure 199.
25. Ensure that low clutch hub is fully seated.

Continued on Page 107

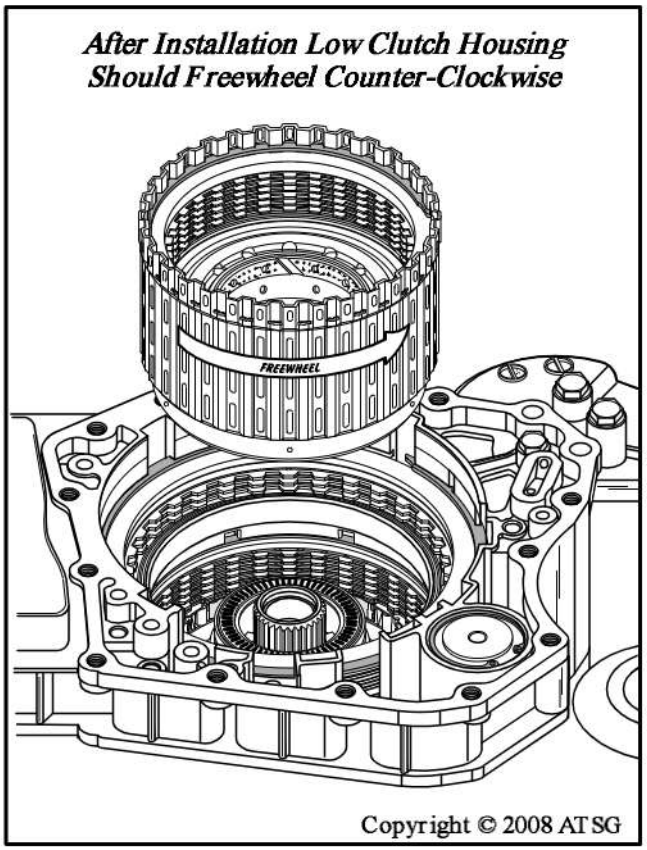

Figure 198

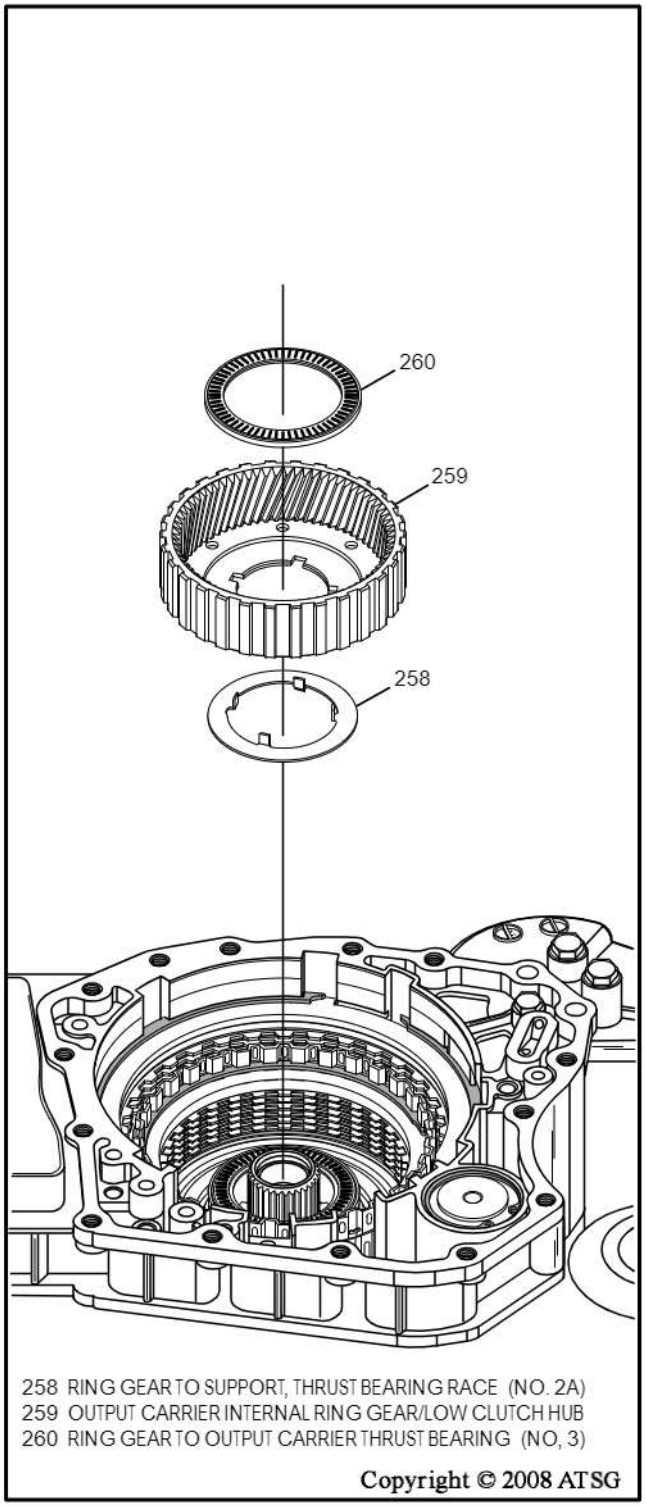

Figure 199

FINAL TRANSAXLE ASSEMBLY (CONT'D)

Rear Internal Parts (Cont'd)

26. Ensure that number 3A thrust bearing race and number 4 thrust bearing are still in place on the output carrier, as shown in Figure 200, and install the output carrier assembly by rotating into position.
27. Install the output sun gear by rotating into the output carrier, as shown in Figure 200.
28. Ensure that the number 5 thrust bearing and the number 6 thrust bearing are in place on the input carrier, as shown in Figure 201, and then install the input carrier assembly by rotating into position.

Continued on Page 108

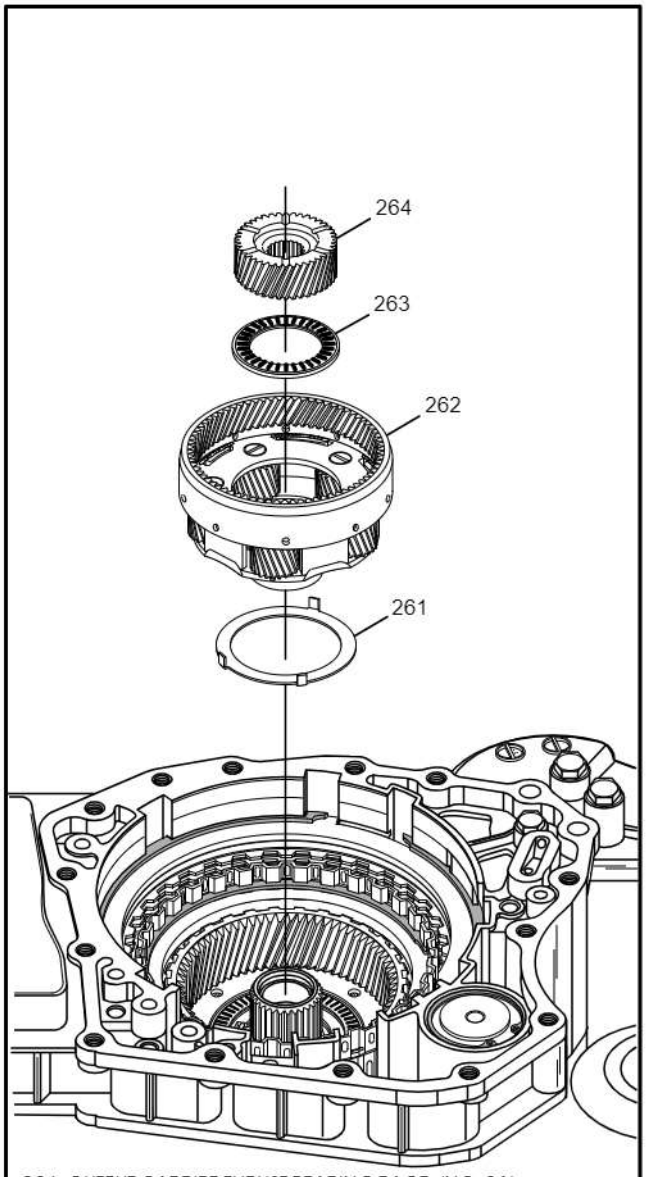

261 OUTPUT CARRIER THRUST BEARING RACE (NO. 3A)
262 OUTPUT CARRIER/INPUT INTERNAL RING GEAR ASSEMBLY
263 OUTPUT CARRIER TO SUN GEAR THRUST BEARING (NO. 4)
264 OUTPUT CARRIER SUN GEAR

Copyright © 2008 ATSG

Figure 200

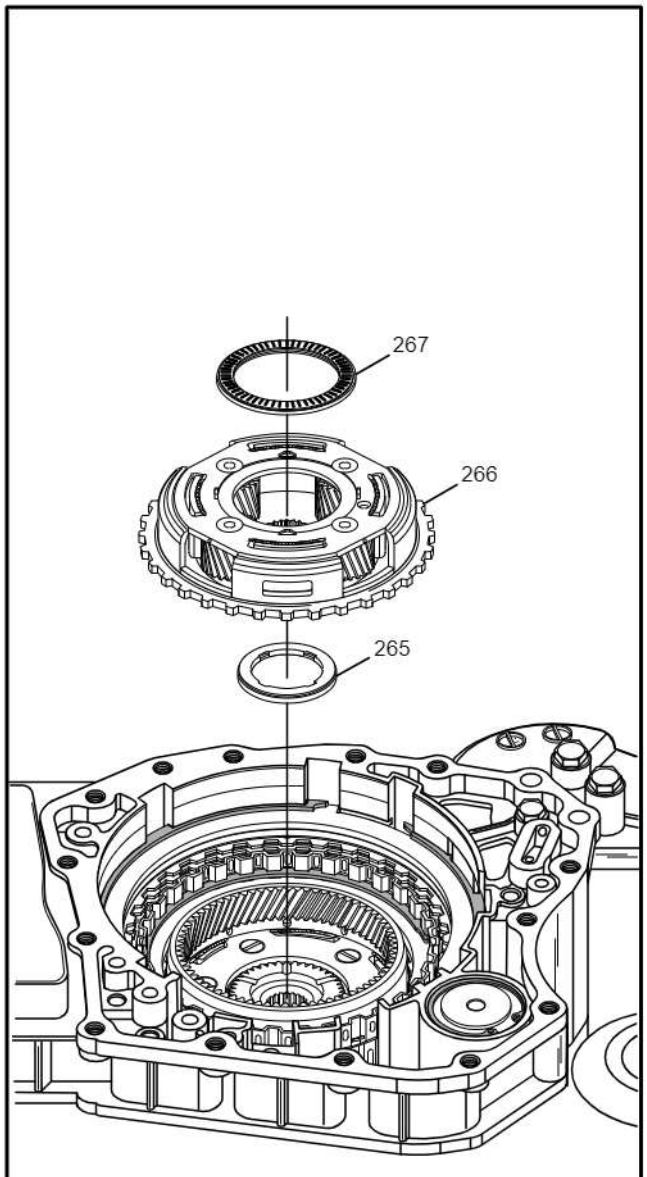

265 SUN GEAR TO INTPUT CARRIER THRUST BEARING (NO. 5)
266 INPUT CARRIER ASSEMBLY
267 INPUT CARRIER TO SUN GEAR THRUST BEARING (NO. 6)

Copyright © 2008 ATSG

Figure 201

FINAL TRANSAXLE ASSEMBLY (CONT'D)

Rear Internal Parts (Cont'd)

29. Ensure that number 6A thrust bearing race and number 7A thrust bearing race are still in place on the input sun gear, as shown in Figure 202.
30. Install the input sun gear/clutch hub assembly, as shown in Figure 202, by rotating back and forth to engage the 2-4 brake clutch frictions and the input carrier.
31. Ensure that number 8A thrust bearing race and number 7 thrust bearing are still in place on the high clutch hub, as shown in Figure 203.
32. Install the high clutch hub and shaft assembly by rotating into position (See Figure 203).

Continued on Page 109

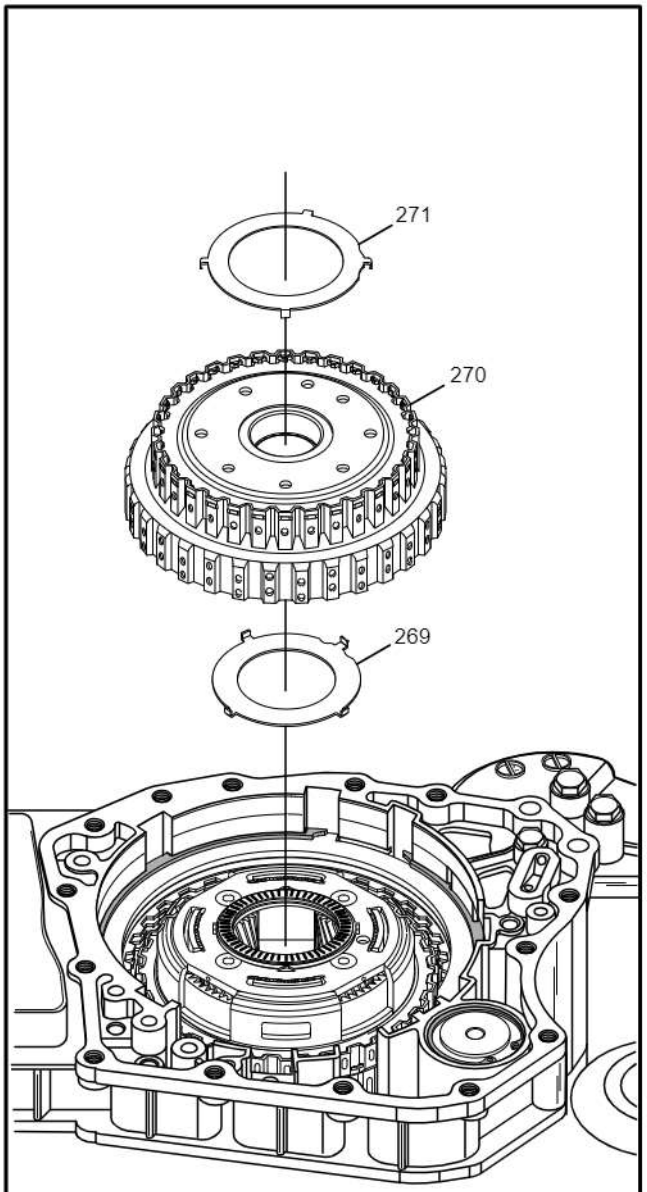

269 INPUT SUN GEAR THRUST BEARING RACE (NO. 6A)
270 INPUT SUN GEAR AND HUB ASSEMBLY
271 SUN GEAR TO CLUTCH HUB THRUST BEARING RACE (NO.7A)

Copyright © 2008 ATSG

Figure 202

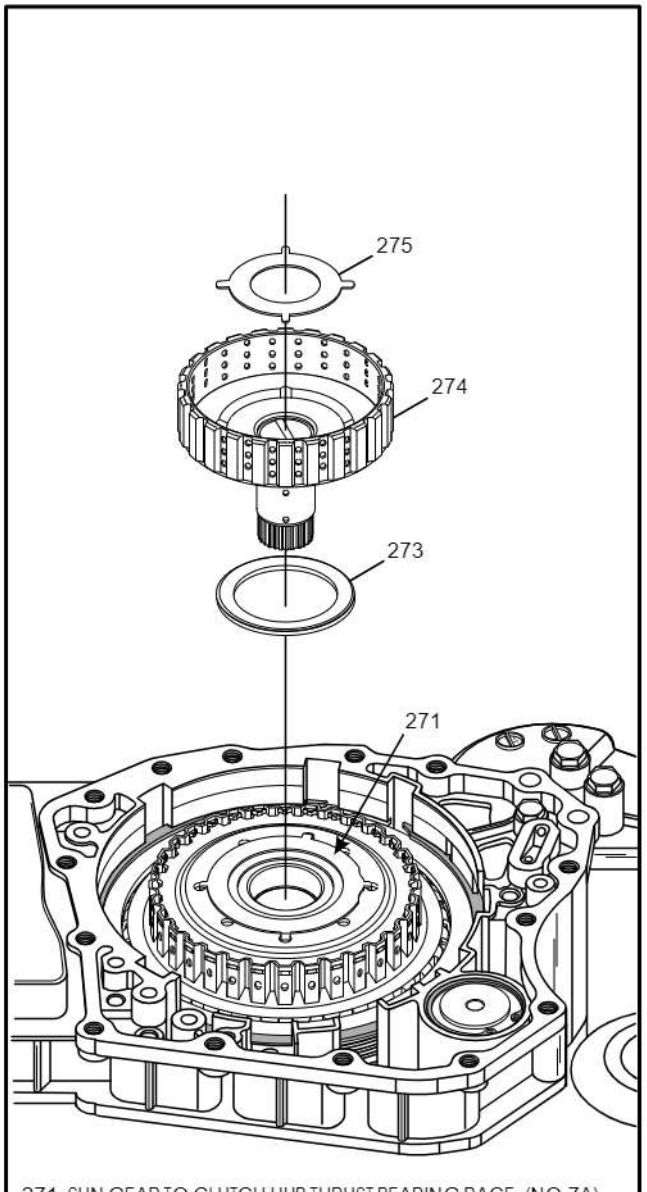

271 SUN GEAR TO CLUTCH HUB THRUST BEARING RACE (NO.7A)
273 HIGH CLUTCH HUB TO SUN GEAR THRUST BEARING (NO. 7)
274 HIGH CLUTCH HUB AND SHAFT
275 HIGH CLUTCH HUB THRUST BEARING RACE (NO. 8A)

Copyright © 2008 ATSG

Figure 203

FINAL TRANSAXLE ASSEMBLY (CONT'D)

Rear Internal Parts (Cont'd)

33. Ensure that number 8 thrust bearing is still in place in the high and reverse clutch housing, as shown in Figure 204.
34. Install the high and reverse clutch housing, as shown in Figure 204, by rotating it back and forth until fully seated.
    Note: Both high and reverse friction plates must be engaged on their respective hubs.
35. Install 2-4 brake clutch return spring assembly, as shown in Figure 204, with opening for the turbine speed sensor positioned as shown.
36. Install the turbine speed sensor, as shown in Figure 205, and torque the two bolts down to 9 N·m (80 in.lb.).
    Note: All three speed sensors should measure 513-627 Ohms resistance.
37. Install the connector with the blue wires onto the turbine speed sensor.

Continued on Page 110

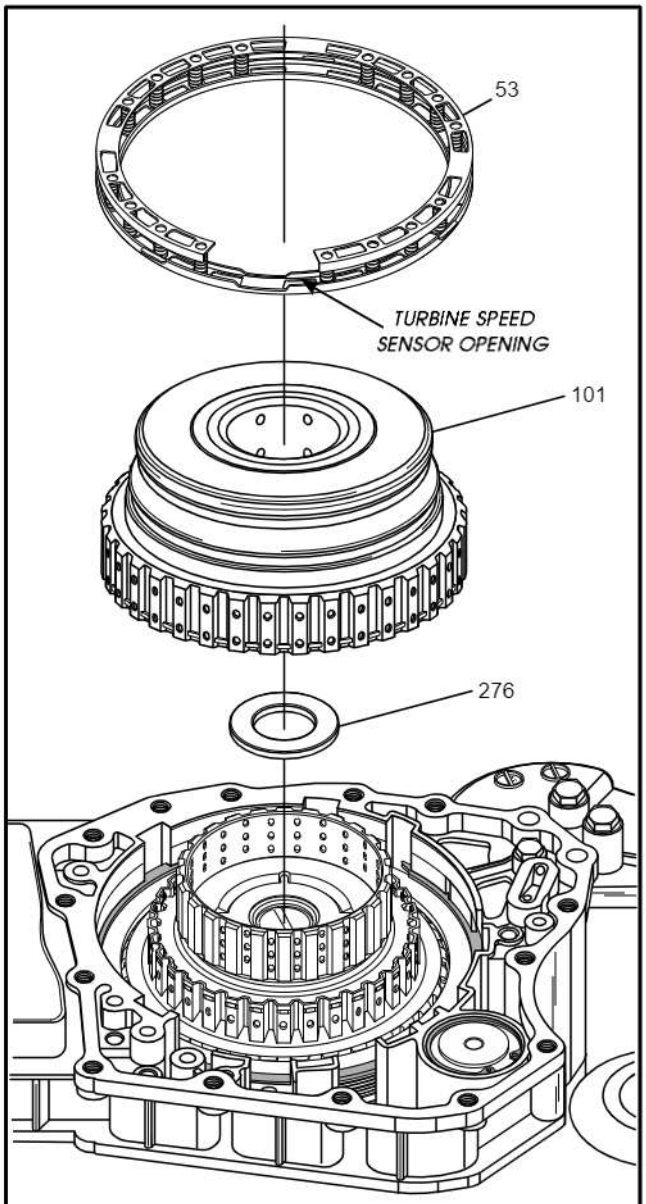

53 2-4 BRAKE CLUTCH PISTON RETURN SPRING ASSEMBLY
101 HIGH AND REVERSE CLUTCH HOUSING ASSEMBLY
276 CLUTCH HOUSING TO HIGH CLUTCH HUB BEARING (NO. 8)

Copyright © 2008 ATSG

Figure 204

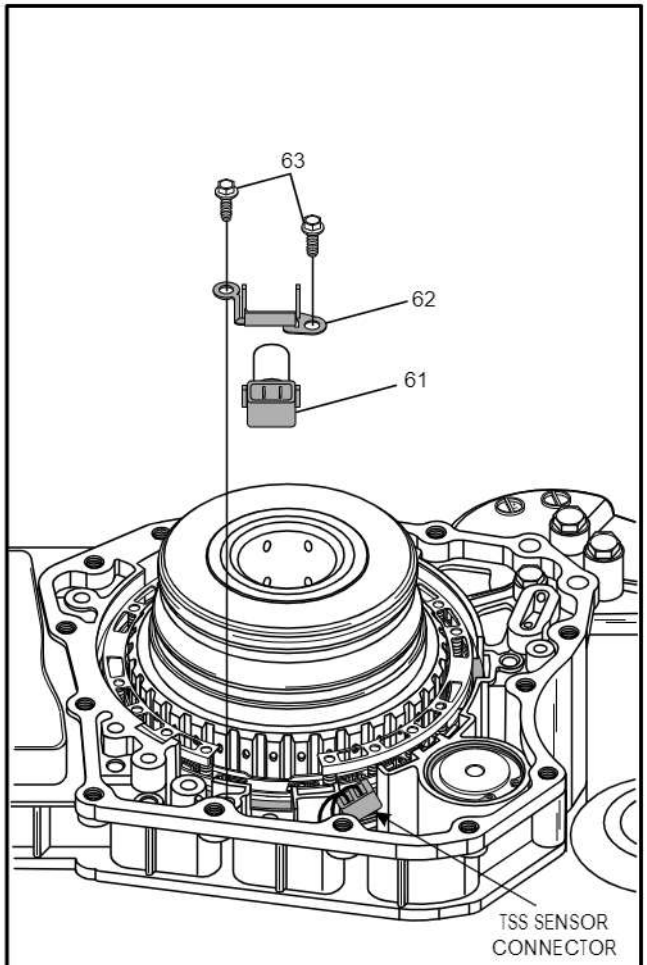

61 TURBINE SPEED SENSOR
62 TURBINE SPEED SENSOR RETAINING CLIP
63 TURBINE SPEED SENSOR RETAINING BOLTS (2 REQUIRED)

Copyright © 2008 ATSG

Figure 205

FINAL TRANSAXLE ASSEMBLY (CONT'D)

Rear Internal Parts (Cont'd)

38. Install the fluid feed pipes into transaxle case, as shown in Figure 206, and seat them gently with a soft mallet.
39. Ensure that ***only*** the number 9 thrust bearing is installed into the high and reverse clutch housing, with the needles facing up, as shown in Figure 207.

    Note: "Do Not" install the selective race.
40. Install the "H" Gage on transaxle, as shown in Figure 208, and lower adjusting rod into high and reverse clutch housing so that it is setting on one needle (See Inset Figure 208)
41. Tighten the locking screw so that adjusting rod remains in that same position.

Continued on Page 111

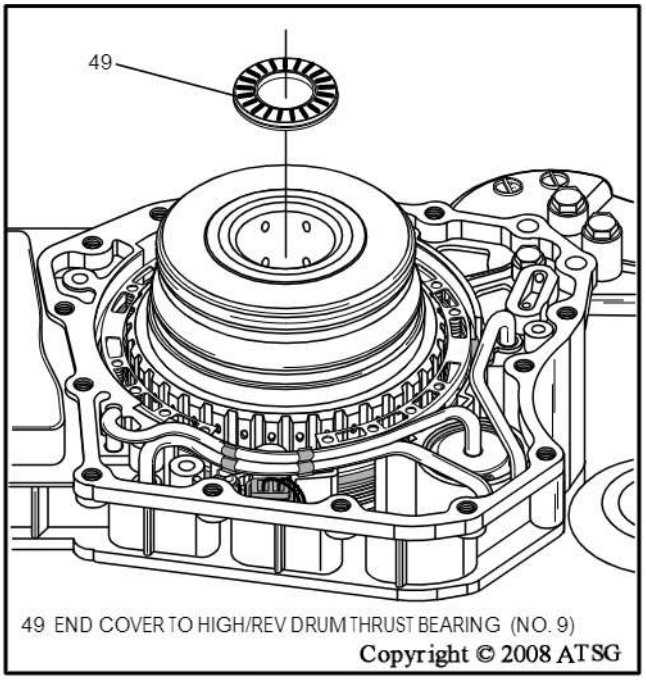

Figure 207

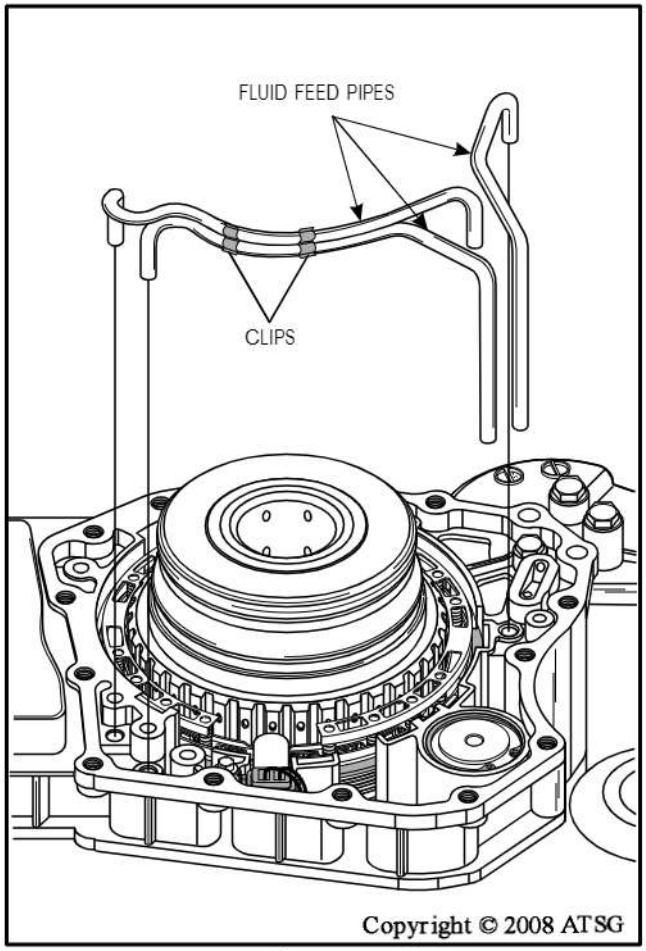

Figure 206

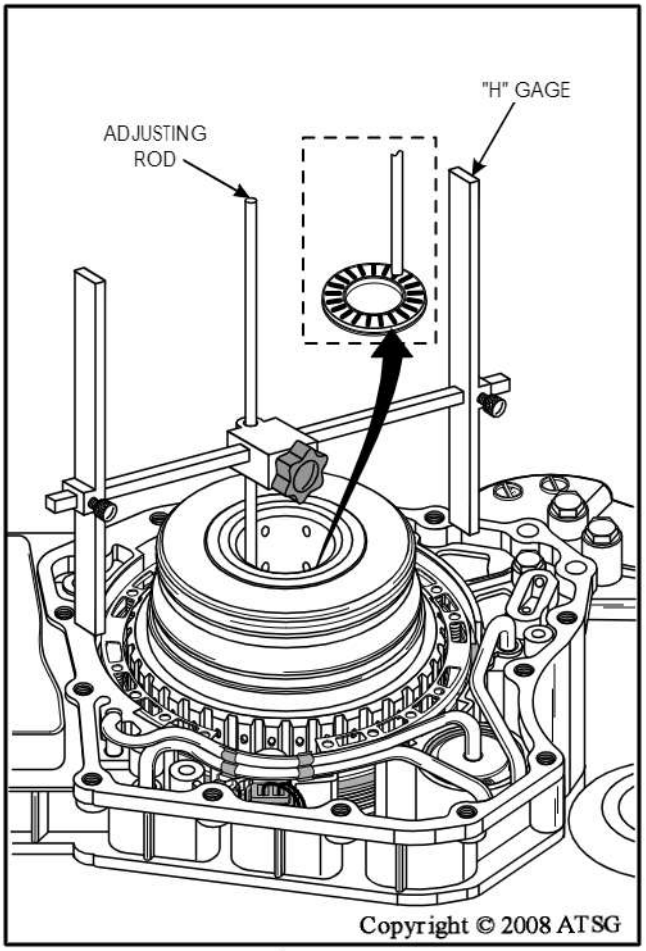

Figure 208

FINAL TRANSAXLE ASSEMBLY (CONT'D)

Rear Internal Parts (Cont'd)

42. Place the pre-assembled end cover on flat work surface, as shown in Figure 209.
43. Place the end cover "selective" thrust bearing race on the direct clutch support, as shown in Figure 209.
44. Turn the "H" Gage over with previous setting and set it on end cover, as shown in Figure 210.
45. Measure the clearance between the adjusting rod and the selective thrust bearing race, as shown in Figure 210.
    Note: End clearance should be; 0.25mm - 0.50mm (.010" - .020")
46. Change the selective thrust bearing race using the chart in Figure 210.
47. Place the correct thrust bearing race onto end cover support and retain with Trans-Jel®.

Continued on Page 112

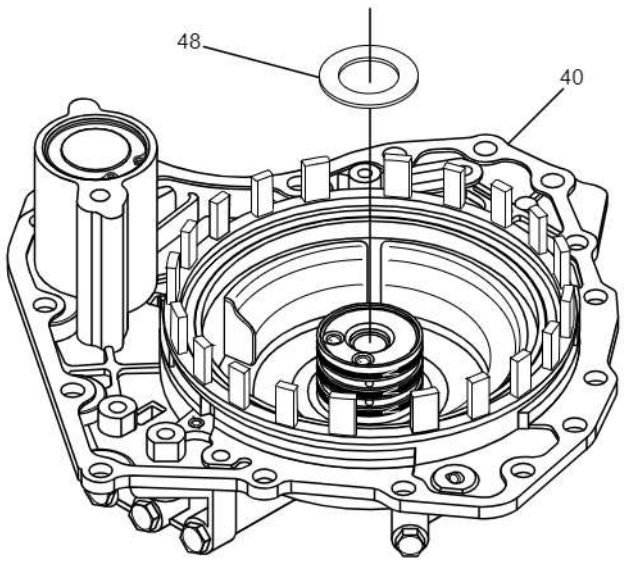

40 TRANSAXLE END COVER ASSEMBLY
48 END COVER "SELECTIVE" BEARING RACE (NO. 9A)

Copyright © 2008 ATSG

Figure 209

End Cover End Clearance Should Be 0.25mm - 0.50mm (.010" - .020")	
Selective End Cover Thrust Bearing Race	
1.4mm (.055")	***1.6mm (.063")***
1.8mm (.071")	***2.0mm (.079")***
2.2mm (.087")	

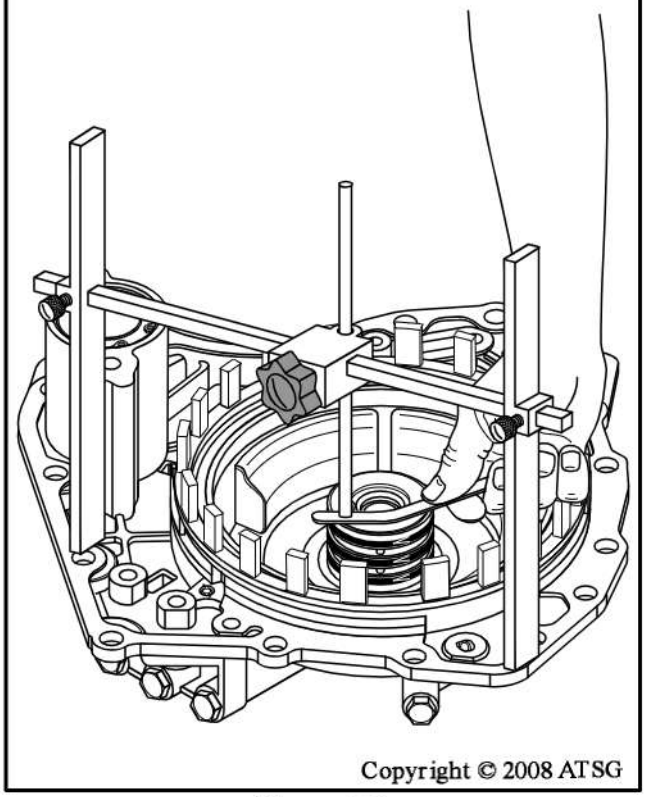

Copyright © 2008 ATSG

Figure 210

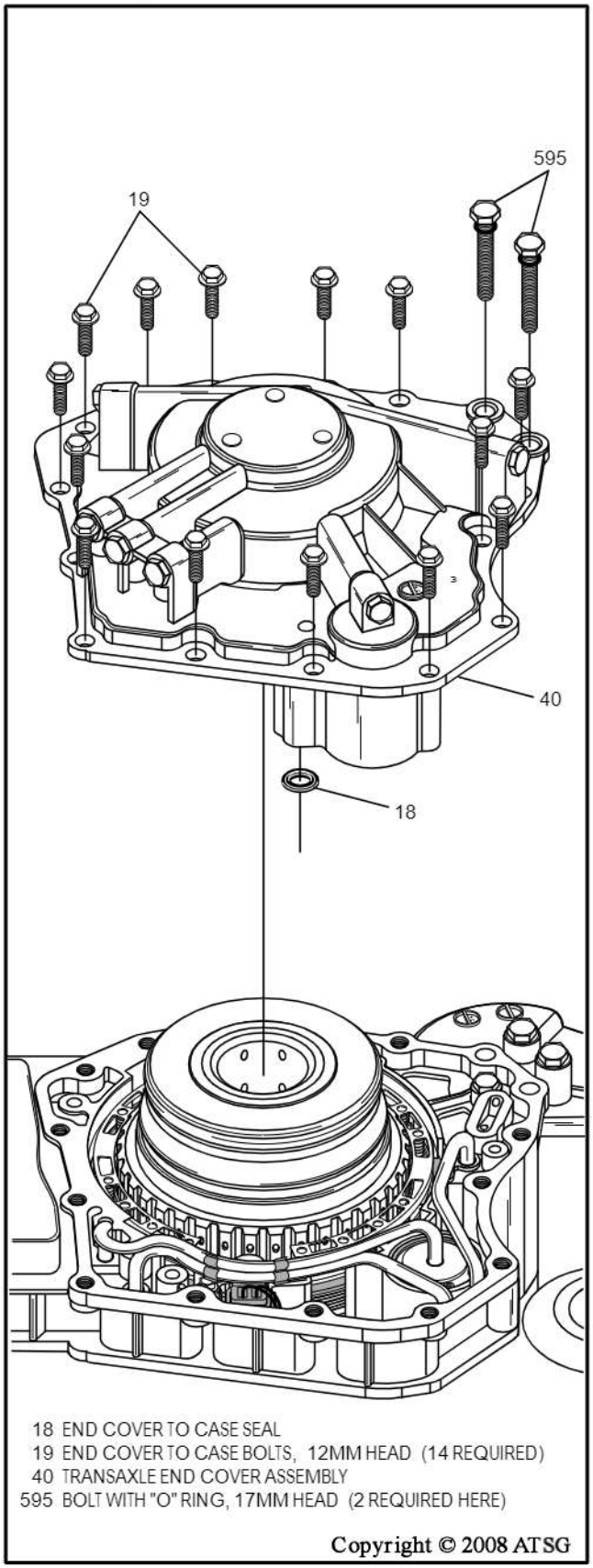

Figure 211

FINAL TRANSAXLE ASSEMBLY (CONT'D)

Rear Internal Parts (Cont'd)

48. Install the end cover to case seal (18) into the pocket in the case, as shown in Figure 211, and retain with small amount of Trans-Jel®.
49. Apply a light coat of silicone sealant to the contact surfaces of the transaxle case and the end cover.
50. Install two new "O" rings on the bolts (595) with the 17mm head, as shown in Figure 211.
51. Lubricate the "O" rings with a small amount of Trans-Jel®.
52. Install the completed end cover assembly onto case, as shown in Figure 211.
    Note: Ensure that it seats fully without the help from a hammer.
53. Torque both the 12mm head bolts and 17mm head bolts to 22 N·m (16 ft.lb.), as shown in Figure 212.

Continued on Page 113

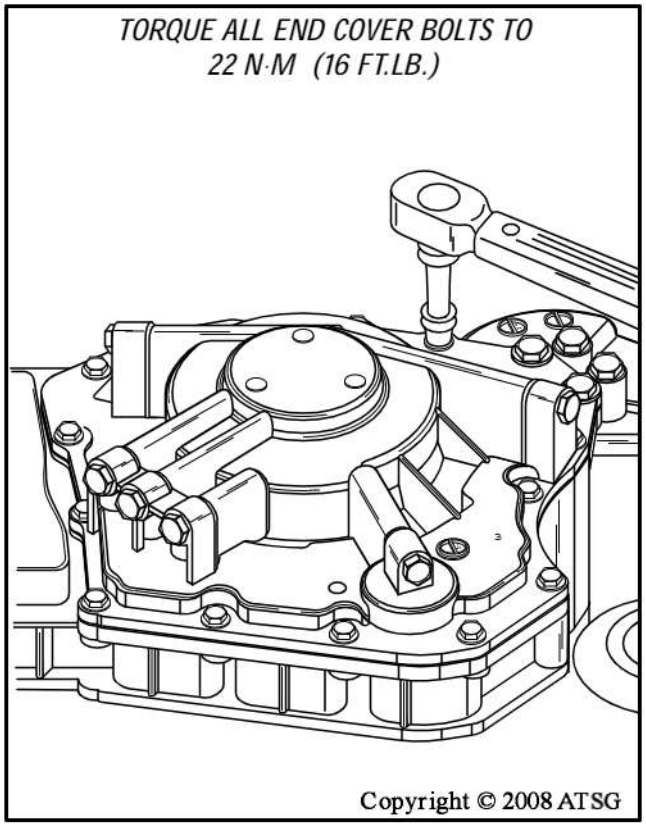

Figure 212

Rear Internal Parts (Cont'd)

54. Install the case half axle seal at this time, as shown in Figure 213, using the proper driver.

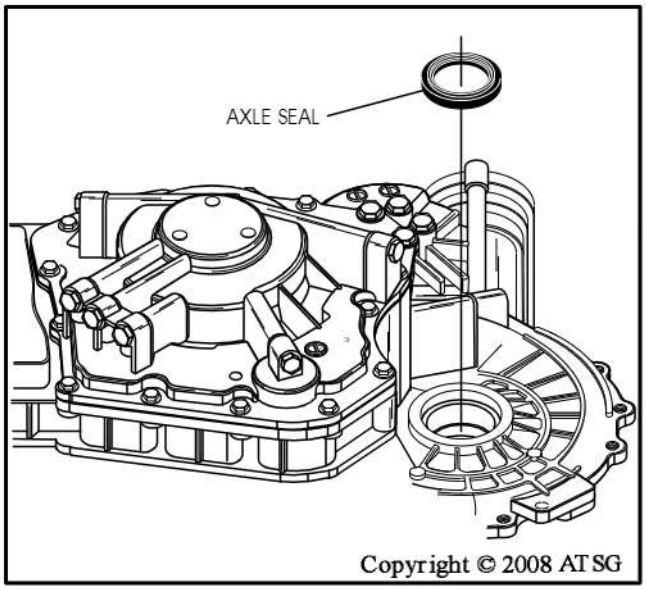

Figure 213

FINAL TRANSAXLE ASSEMBLY (CONT'D)

Front Internal Parts

1. Turn the transaxle case over and set it on end cover so front is facing up (See Figure 214).
2. Install the output shaft speed sensor, as shown in Figure 214, and torque the retaining bolt to 9 N·m (80 in.lb.).
   Note: Connector with yellow wires goes on Output Speed Sensor.
3. Install the intermediate speed sensor, as shown in Figure 214, and torque the retaining bolt to 9N·m (80 in.lb.).
   Note: Connector with red wires goes on the Intermediate Speed Sensor.
4. Install the wire harness retaining bracket (68), as shown in Figure 214, and torque retaining bolt to 9 N·m (80 in.lb.).
   Note: Yellow wires go under bracket.
5. Install the TFT. sensor, as shown in Figure 214, and torque bolt to 9 N·m (80 in.lb.).

Continued on Page 114

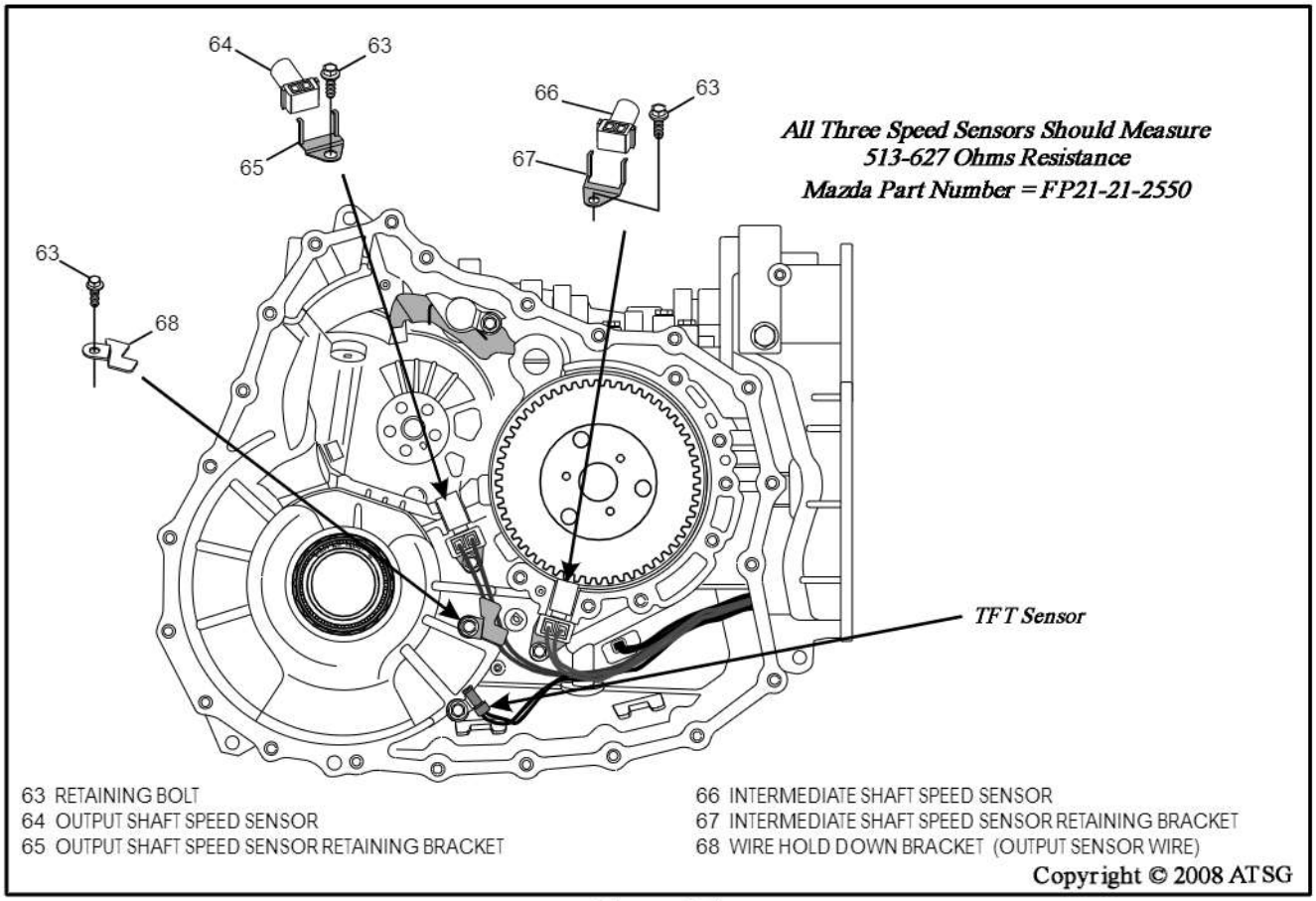

Figure 214

FINAL TRANSAXLE ASSEMBLY (CONT'D)

Front Internal Parts (Cont'd)

6. Install the number 12 thrust bearing and the number 12A thrust bearing race onto the direct clutch support, as shown in Figure 215.
7. Lubricate the inside sealing ring area of direct clutch housing with the proper fluid and install the completed direct clutch housing, as shown in Figure 215.
   Note: After installation, direct clutch housing should freewheel counter-clockwise and lock clockwise, as shown in Figure 215.
8. Install the reduction band assembly, as shown in Figure 215, and engage with the previously installed servo pin and band anchor.
9. Remove the pressure plug and "O" ring, by the reduction servo, from transaxle case, as shown in Figure 217.
10. Install the factory servo piston holding tool, as shown in Figure 217.
    Note: This is a mandatory tool to enable you to torque band adjusting screw locking nut properly (See Figure 216).
11. Install 14mm deep socket over the adjusting screw locking nut and loosen (See Figure 217).

Continued on Page 115

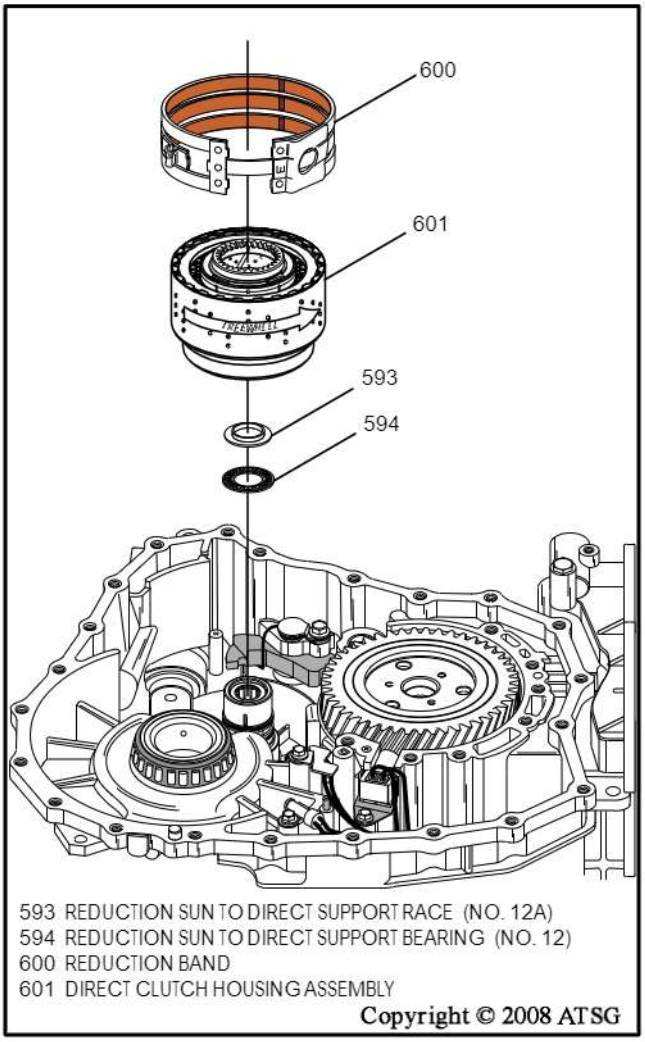

Figure 215

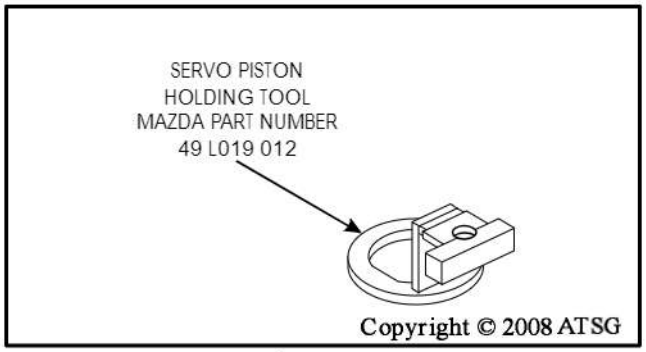

Figure 216

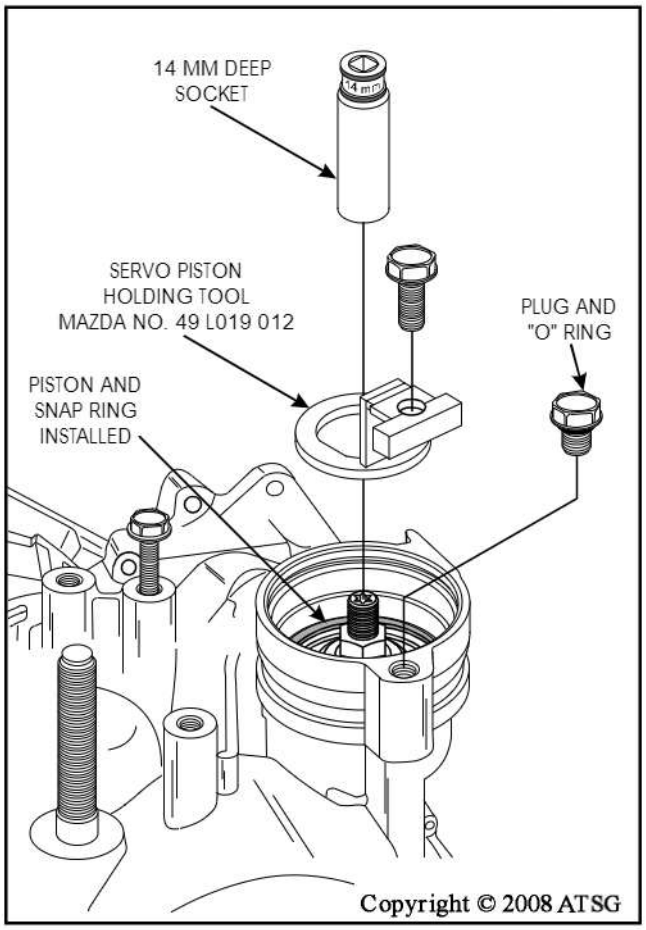

Figure 217

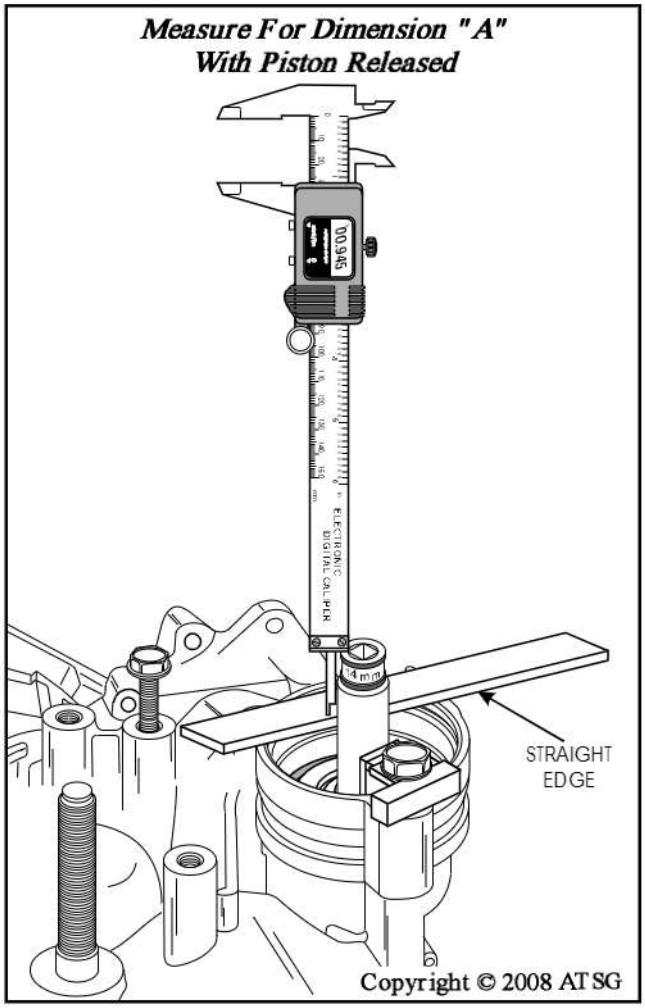

Figure 218

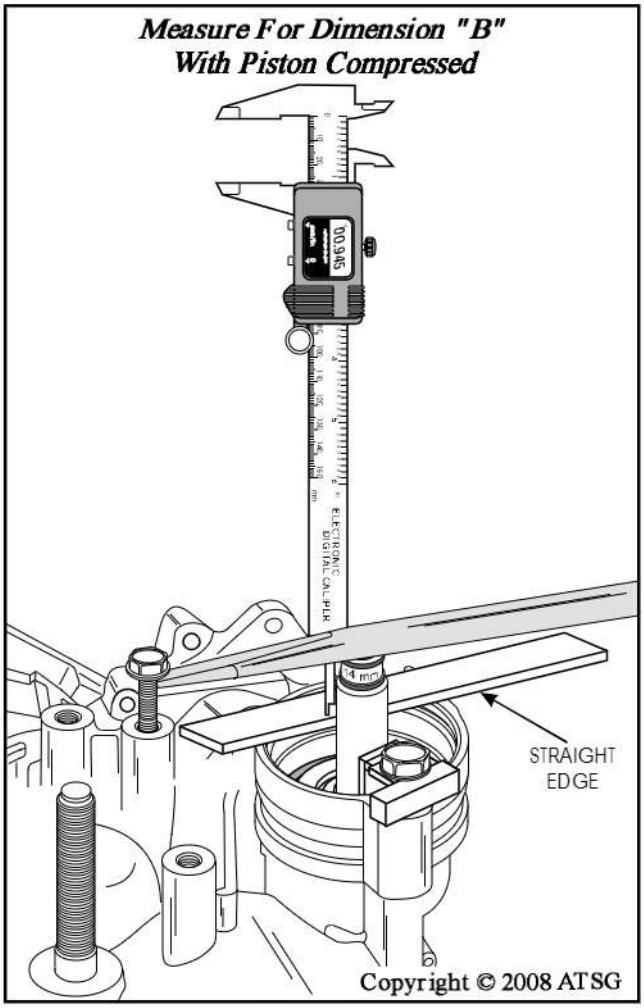

Figure 219

Front Internal Parts (Cont'd)

12. Using a digital caliper measure from the top of 14 mm deep socket, down to a straight edge placed on machined surface of transaxle case, as shown in Figure 218.
13. Record this measurement as "Dimension A".
14. Fully compress the servo piston and the 14mm socket, using a large screwdriver, as shown in Figure 219.
15. With piston fully compressed, measure again from the top of socket down to straight edge, and record the measurement as "Dimension B".
16. Subtract "Dimension B" from "Dimension A".
17. Turn adjusting screw as necessary to achieve, a minimum of 3.175mm (0.125") to a maximum of 4.75mm (0.187").
18. Torque the adjusting screw locking nut down to 39-50 N·m (30-35 ft.lb.).
    Caution: Do not allow the band to become dislodged from the band anchor, as indexing the band back into the proper position will require splitting the case halves.
19. Remove servo piston holding tool and re-install the pressure plug with a new "O" ring.

Continued on Page 116

FINAL TRANSAXLE ASSEMBLY (CONT'D)

Front Internal Parts (Cont'd)

20. Lubricate the "O" rings on the servo cover with a small amount of Trans-Jel®.
21. Install the pre-assembled reduction servo cover assembly, as shown in Figure 220.
22. Compress the cover and install the snap ring, as shown in Figure 220.
23. Install the reduction sun gear, as shown in Figure 221.
24. Install the reduction planetary gear assembly, as shown in Figure 221, by rotating back and forth until the direct clutch hub has engaged in all direct clutch frictions.
25. Ensure that the number 10 thrust bearing (625) is still in place on the pinion gear.

Continued on Page 117

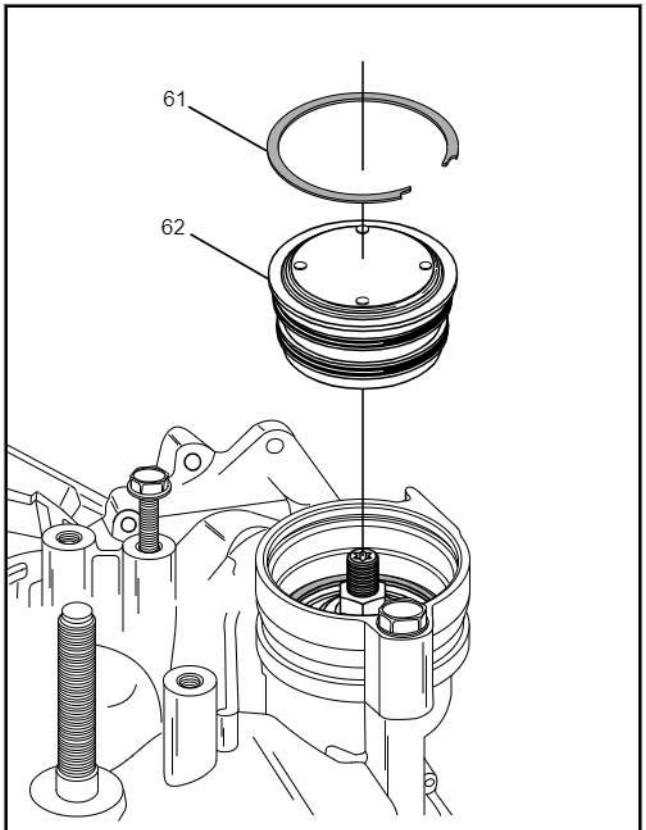

61 REDUCTION SERVO COVER RETAINING SNAP RING
62 REDUCTION SERVO COVER AND "O" RINGS ASSEMBLY

Copyright © 2008 ATSG

Figure 220

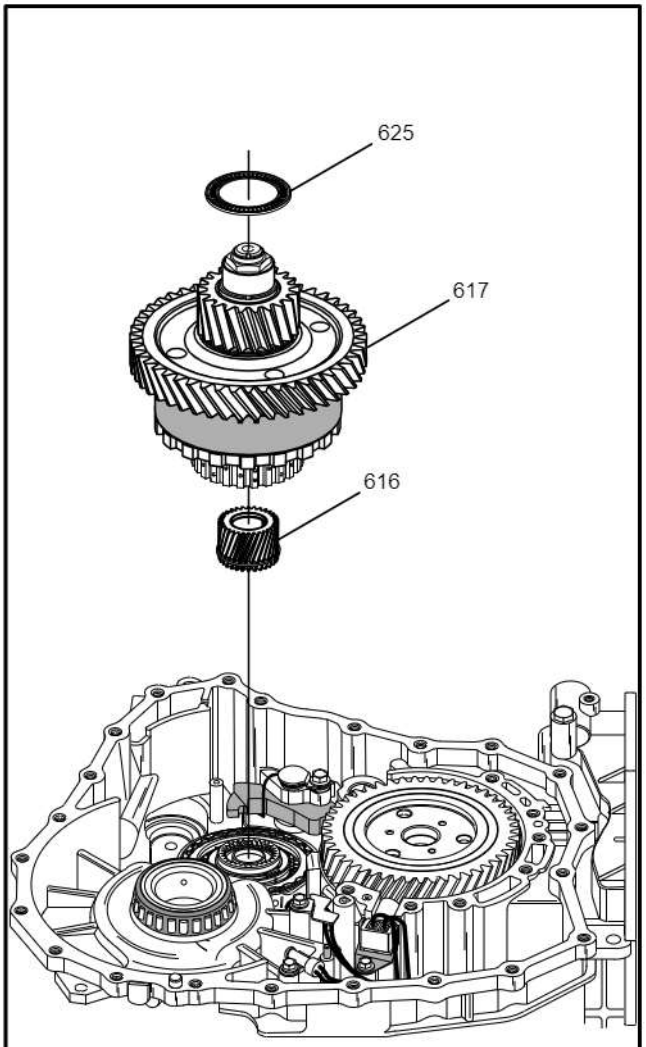

616 REDUCTION SUN GEAR ASSEMBLY
617 REDUCTION PLANETARY GEAR ASSEMBLY
625 PINION GEAR TO CONV. HOUSING BEARING (NO. 10)

Copyright © 2008 ATSG

Figure 221

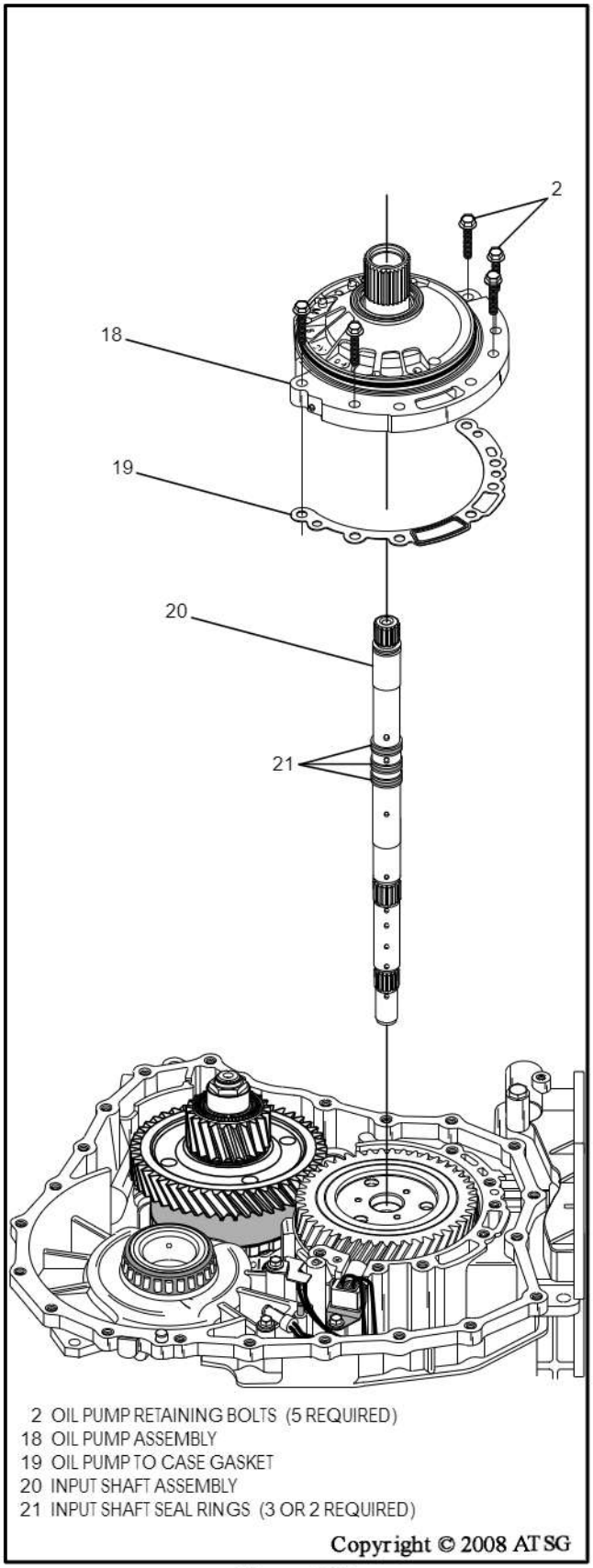

Figure 222

FINAL TRANSAXLE ASSEMBLY (CONT'D)

Front Internal Parts (Cont'd)

26. Lubricate sealing rings on turbine shaft with a small amount of the proper fluid and install the turbine shaft, as shown in Figure 222.
27. Install a new oil pump to case gasket onto the case, as shown in Figure 222.
    Note: There have been some reports of pump gaskets from aftermarket suppliers that are less than desireable. Part number for OEM Mazda gasket is FP01-19-221, if necessary.
28. Install the pre-assembled oil pump assembly, as shown in Figure 222.
29. Install five oil pump to case bolts in positions shown in Figure 222.
30. Torque the five oil pump to case bolts to; 22 N·m (16 ft.lb.), as shown in Figure 223.

Continued on Page 118

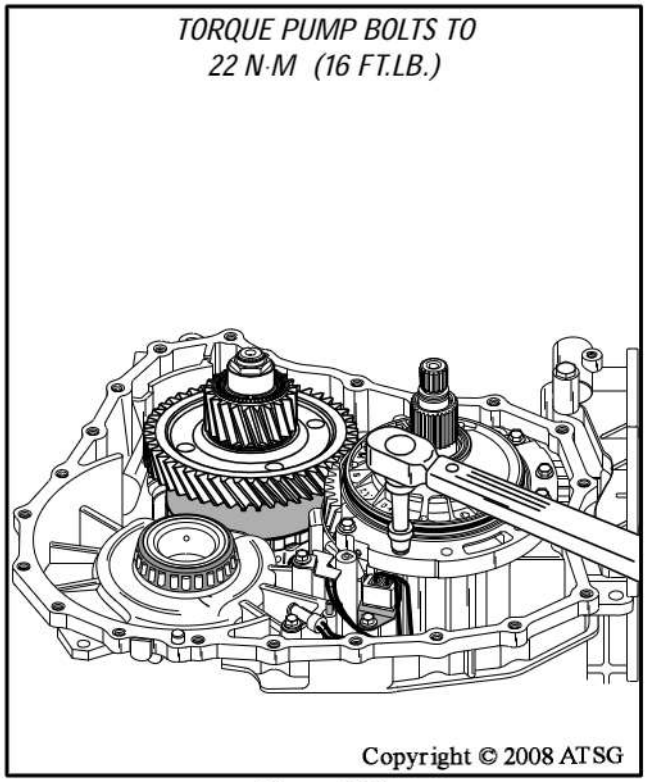

Figure 223

FINAL TRANSAXLE ASSEMBLY (CONT'D)

Front Internal Parts (Cont'd)

31. Install new "O" ring seal on the turbine shaft, as shown in Figure 224.
32. Install new fluid filter with the two retaining bolts, as shown in Figure 225.
33. Torque the two fluid filter retaining bolts to; 22 N·m (16 ft.lb.), also shown in Figure 225.

Continued on Page 119

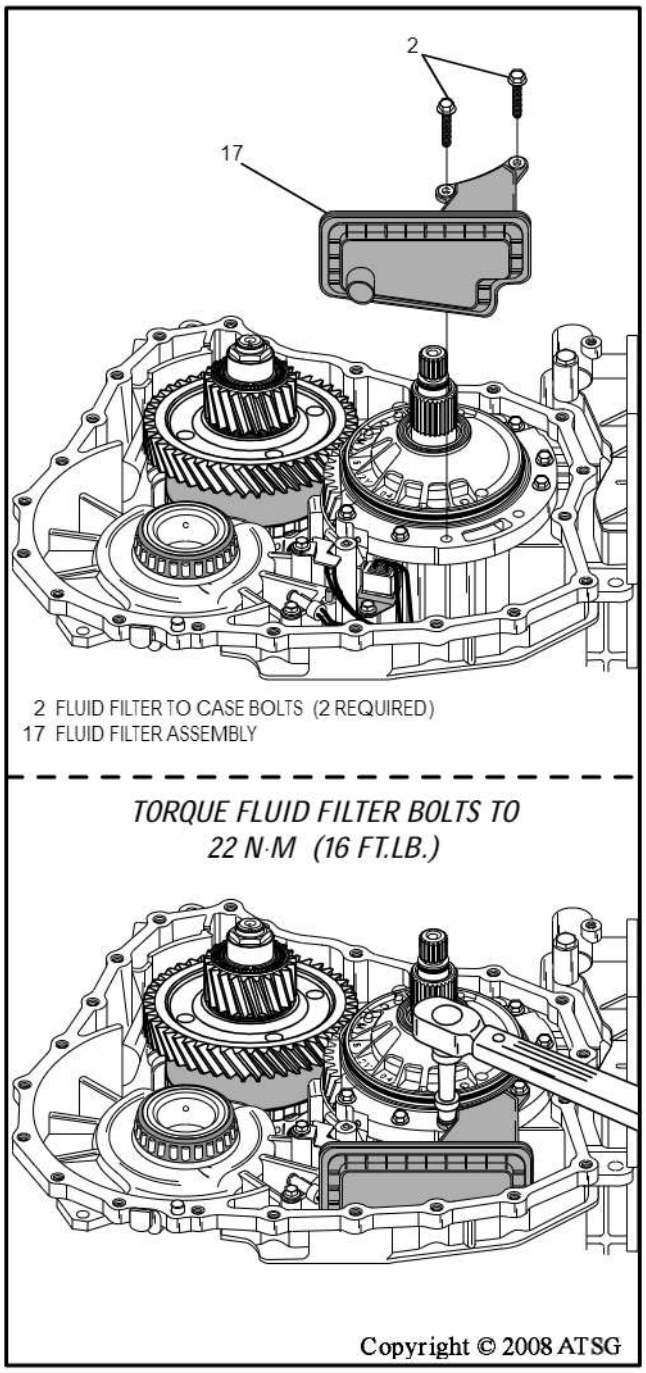

Figure 225

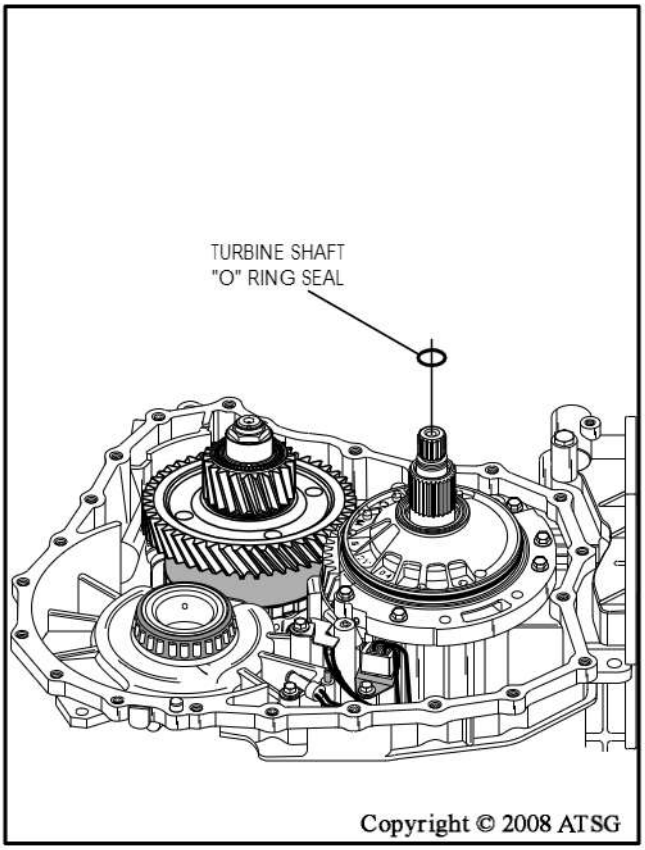

Figure 224

FINAL TRANSAXLE ASSEMBLY (CONT'D)

Front Internal Parts (Cont'd)

34. Install the pre-assembled final drive assembly, as shown in Figure 226.
    Note: Lubricate the tapered roller bearings with the proper fluid before installation.
35. Apply a light coat of silicone sealant to the contact surfaces of the converter housing and the transaxle case.
36. Apply a small amount of Trans-Jel® to inside diameter of pump bore in converter housing.
37. Install the converter housing onto the transaxle case, as shown in Figure 227, and install the 22 retaining bolts.
38. Exact bolt locations are shown in Figure 228.

Continued on Page 120

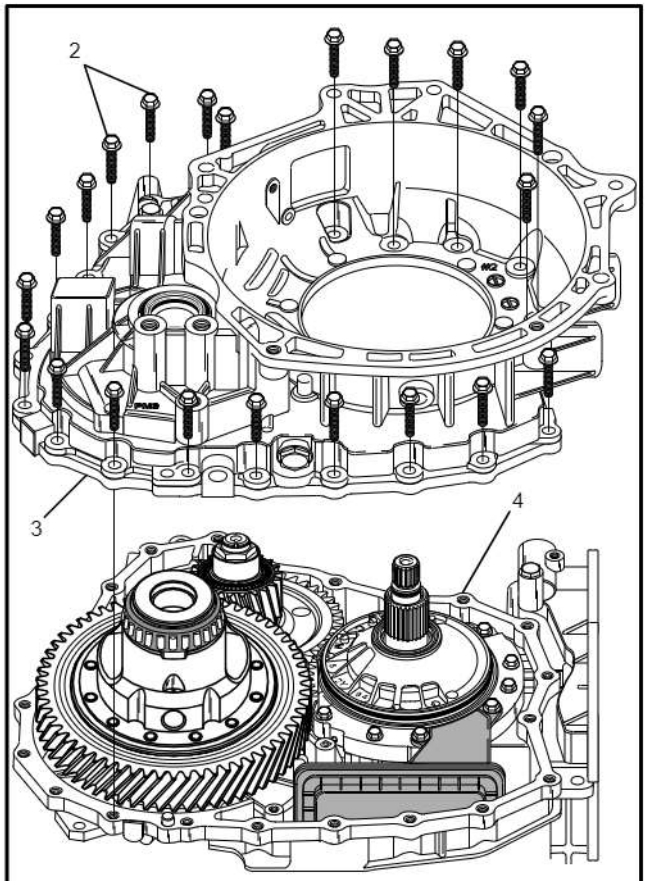

2 CONVERTER HOUSING TO CASE BOLTS (22 REQUIRED)
3 CONVERTER HOUSING ASSEMBLY
4 TRANSAXLE CASE ASSEMBLY

Copyright © 2008 ATSG

Figure 227

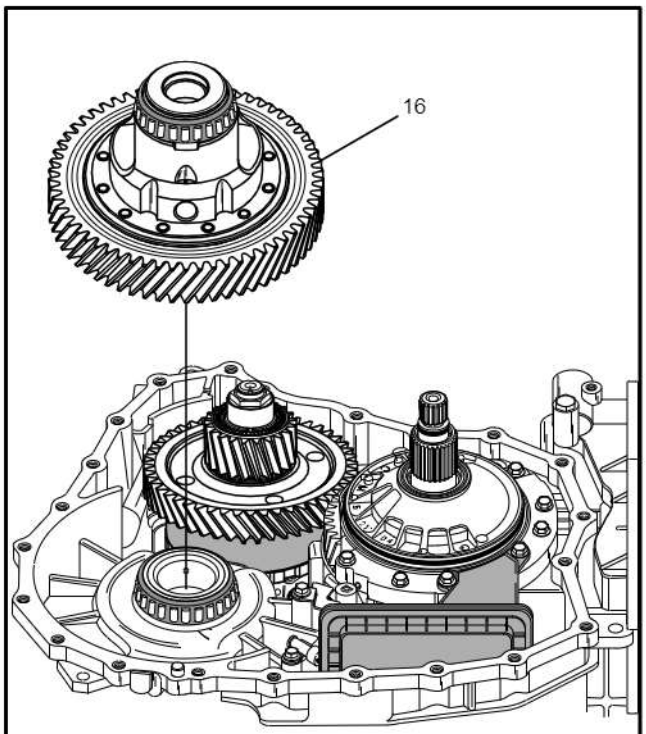

16 FINAL DRIVE RING GEAR AND CARRIER ASSEMBLY

Copyright © 2008 ATSG

Figure 226

CONVERTER HOUSING BOLT LOCATIONS

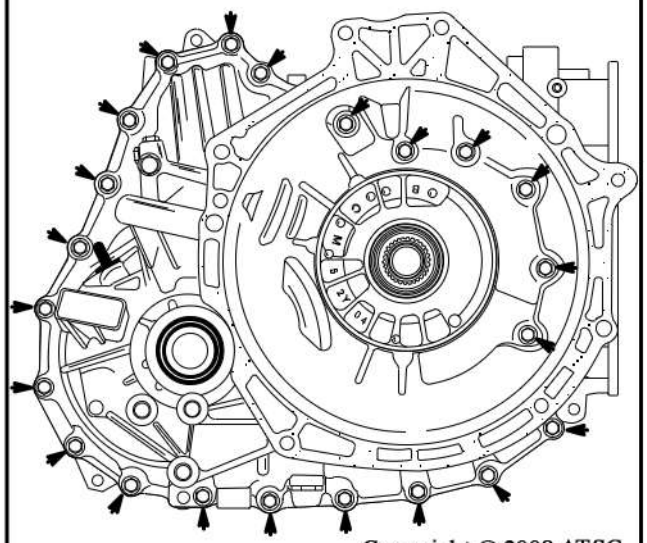

Copyright © 2008 ATSG

Figure 228

FINAL TRANSAXLE ASSEMBLY (CONT'D)

Front Internal Parts (Cont'd)

39. Torque all of the converter housing bolts to 30 N·m (22 ft.lb.), as shown in Figure 229, using a criss-cross pattern.
40. Place the speed sensor wiring harness outside of the pan rail, as shown in Figure 230, in preparation for valve body installation.
41. Install a new reduction band seal into the case pocket, as shown in Figure 230, and retain with a small amount of Trans-Jel®.
42. Install the low/reverse clutch "top-hat" seal, as shown in Figure 230, and retain with a small amount of Trans-Jel®.
43. Place the transaxle in Manual Low position by rotating the manual shaft all the way to the left, as shown in Figure 231.
    Note: For some models this will be the lowest position possible, such as Mazda "6", which will actually be Drive.

Continued on Page 121

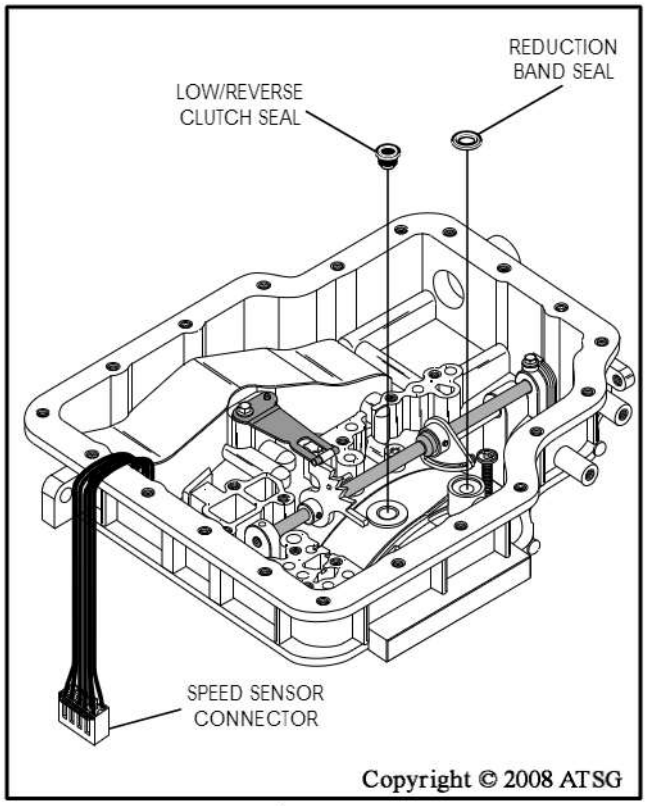

Figure 230

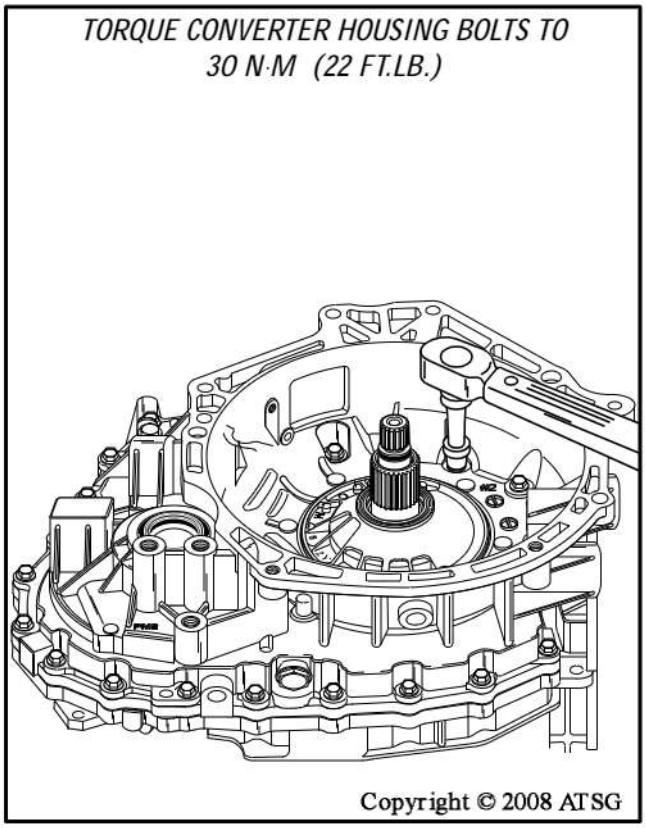

Figure 229

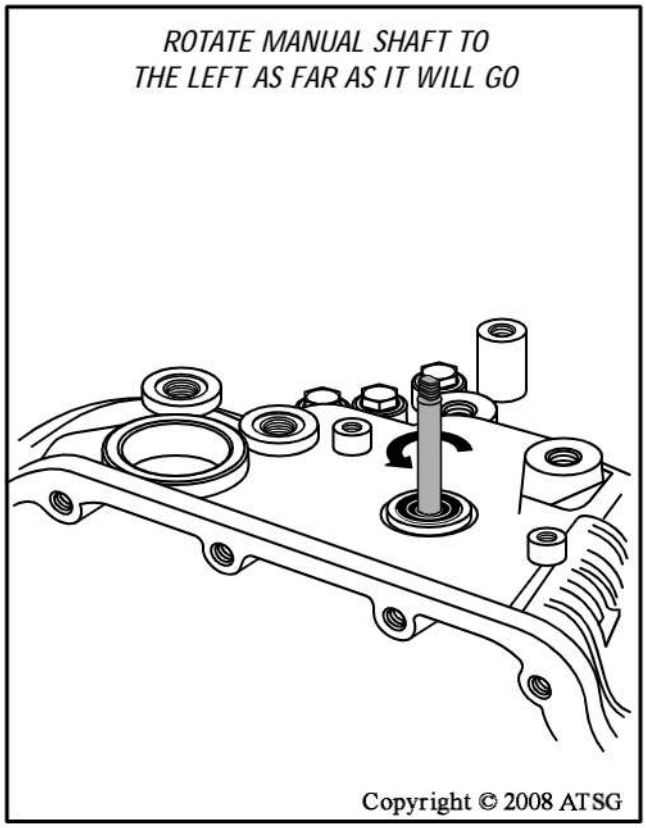

Figure 231

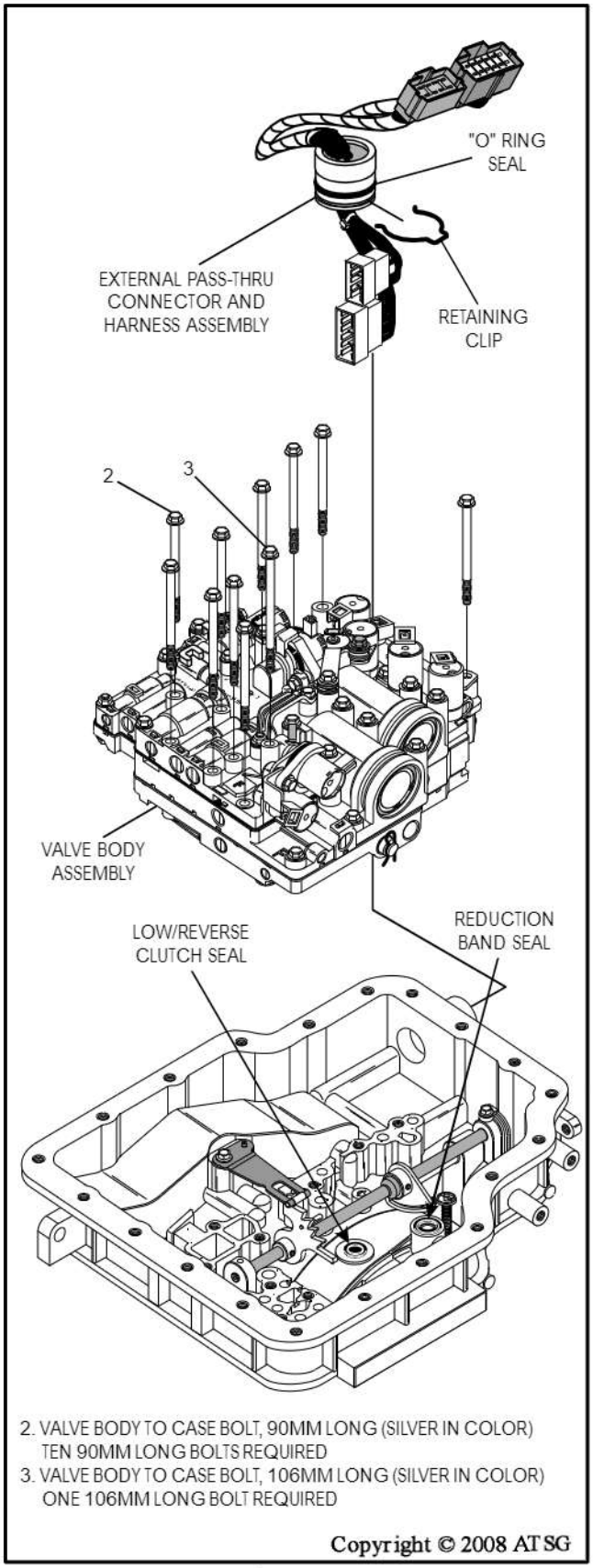

Figure 232

FINAL TRANSAXLE ASSEMBLY (CONT'D)

Front Internal Parts (Cont'd)

44. Install the pre-assembled valve body assembly, as shown in Figure 232, while holding manual valve with clevis pin against valve body.
    Note: After the valve body is in place, you can remove the clevis pin with a pick.
45. After the valve body is in place, check that the manual valve is properly located on the linkage pin by moving the manual lever.
46. Install the 11 silver colored valve body to case bolts, as shown in Figure 232.
    Note: Notice that one is longer than all of the others. Figure 233 shows you where they are all positioned. Hand tighten only at this time.
47. Install new "O" ring on the external pass-thru connector and lube with Trans-Jel®.
48. Install the external pass-thru connector and harness assembly and install retaining clip, as shown in Figure 232.

Continued on Page 122

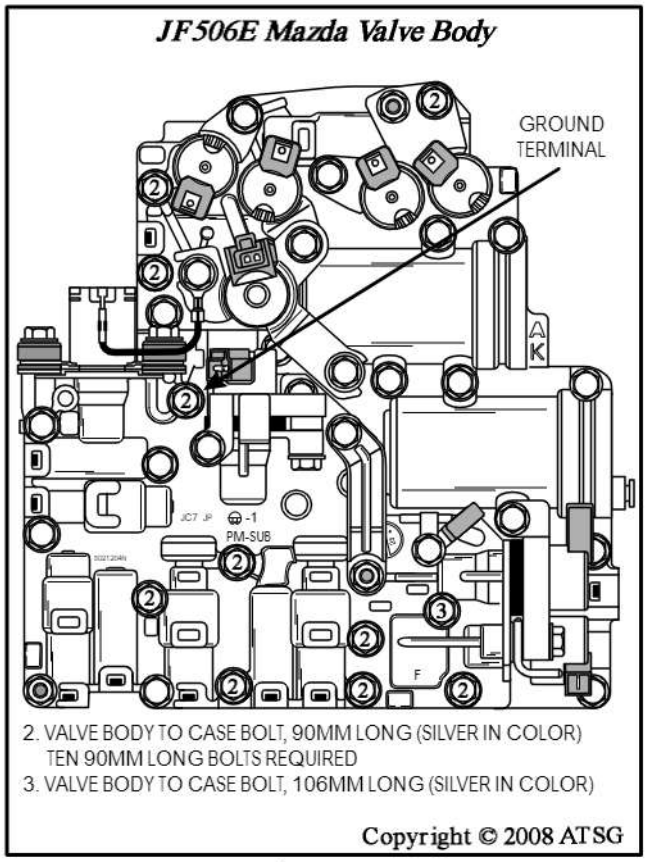

Figure 233

FINAL TRANSAXLE ASSEMBLY (CONT'D)

Front Internal Parts (Cont'd)

49. Install the internal solenoid harness assembly, as shown in Figure 235, ensuring that you get the wires indicated in Figure 236 under valve body bracket.
    Note: Wire harness ground terminal goes under valve body to case bolt indicated in Figure 233.
50. Now torque all silver valve body to case bolts to 9 N·m (80 in.lb.), as shown in Figure 234.
51. Connect the internal speed sensor harness to the 8-way internal connector.
52. Connect the internal solenoid harness to the 10-way internal connector.
53. Apply a light coat of silicone sealant to the contact surfaces of the side cover and transaxle case.
54. Install the side cover on the transaxle case, as shown in Figure 235, and install the 20 side cover retaining bolts.

Continued on Page 123

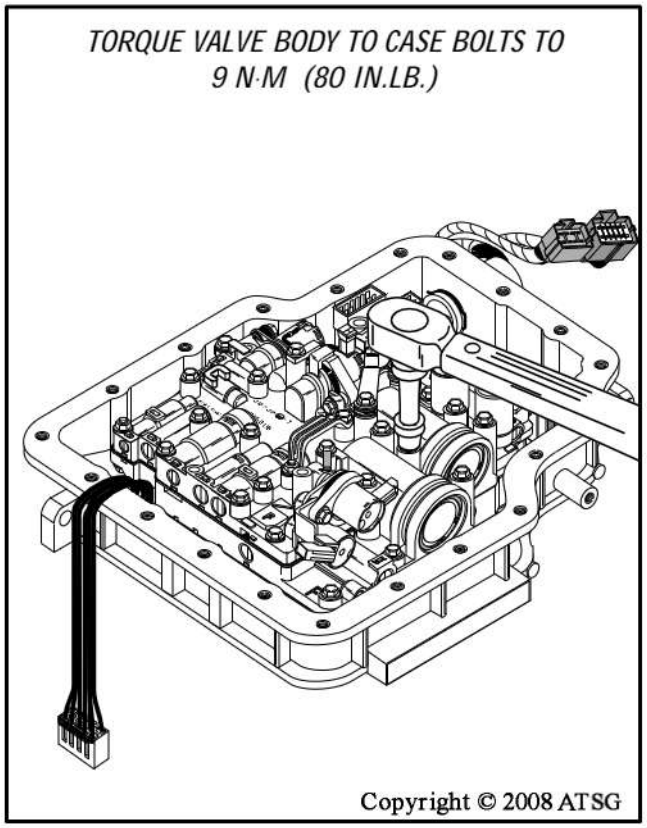

Figure 234

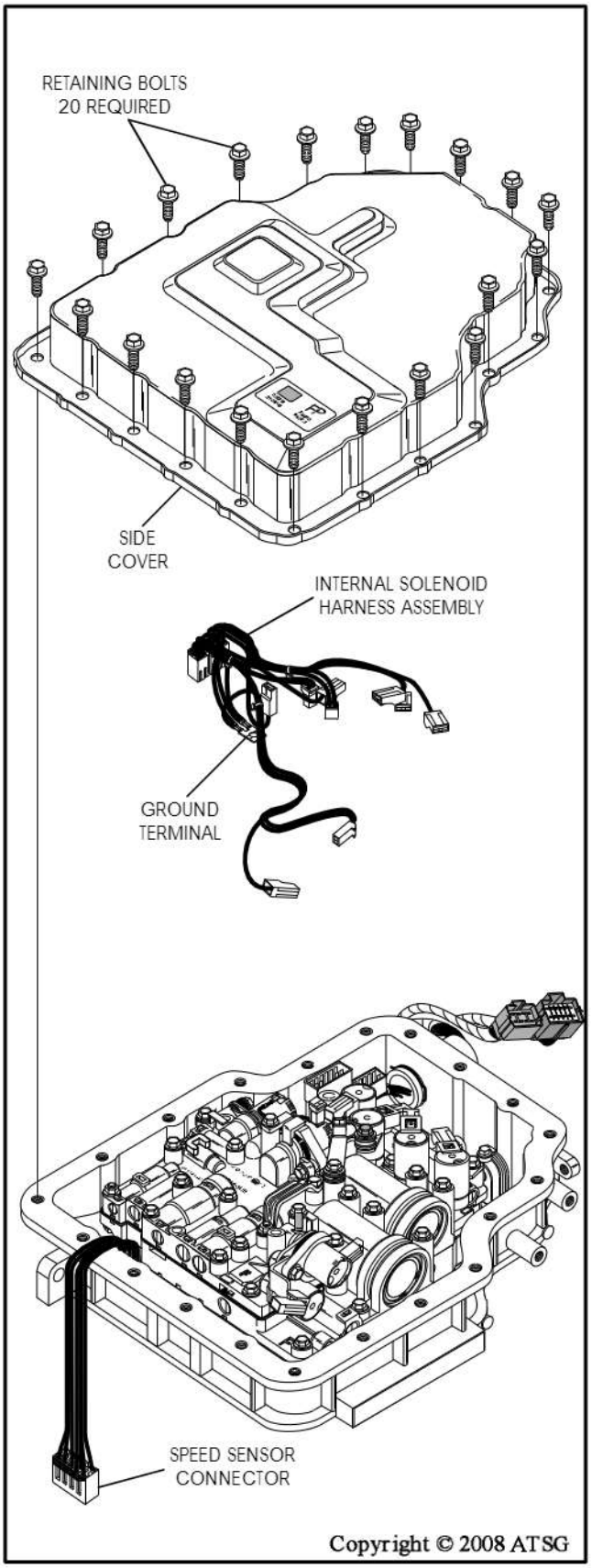

Figure 235

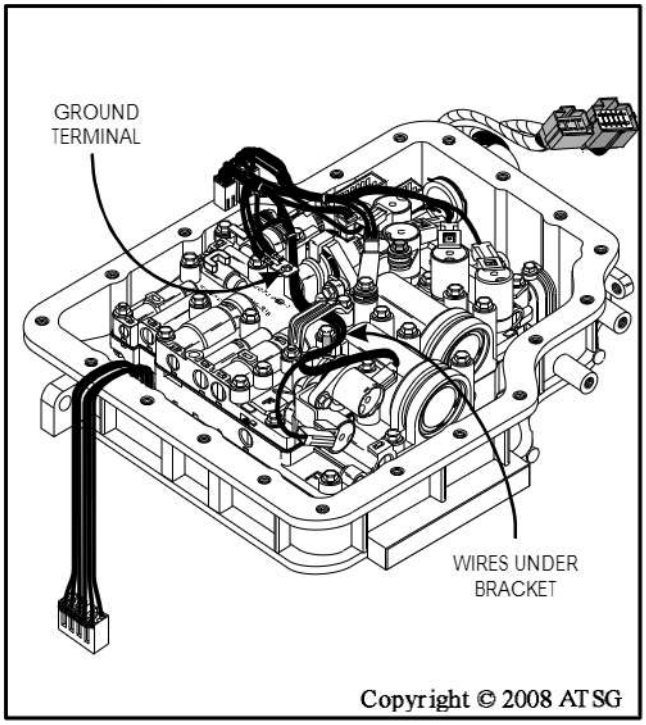

Figure 236

FINAL TRANSAXLE ASSEMBLY (CONT'D)

Front Internal Parts (Cont'd)

55. Torque all twenty of the side cover bolts to 10 N·m (90 in.lb.), as shown in Figure 237.

External Parts

1. Install the transaxle range sensor, as shown in Figure 238, and hand tighten only the retaining bolts.

Continued on Page 124

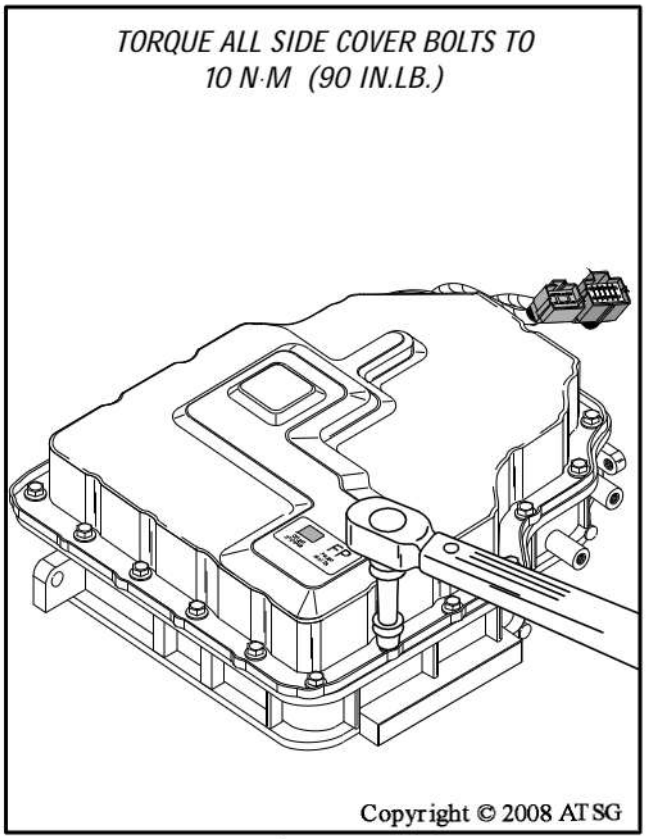

Figure 237

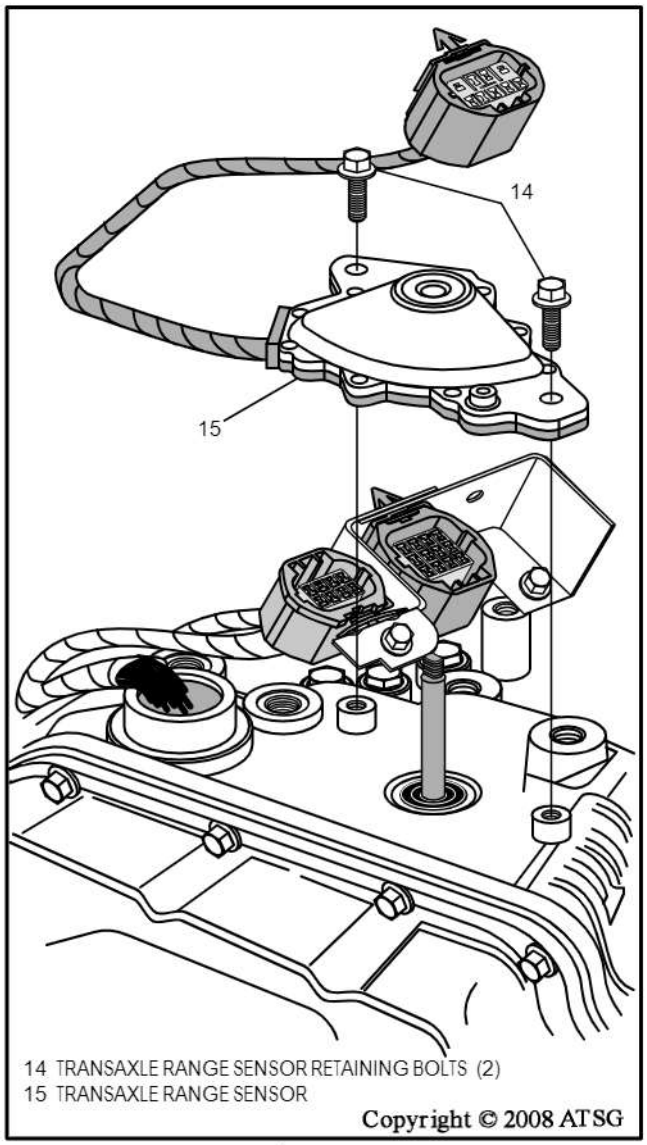

Figure 238

FINAL TRANSAXLE ASSEMBLY (CONT'D)

External Parts

2. Rotate the manual shaft fully to the right, then return 2 notches, to set the neutral position.
3. Install the Mazda transaxle range switch special tool number 49-L019-013, as it is shown in Figure 239.
4. Rotate the transaxle range sensor until the rod of the tool enters the neutral hole, as shown in Figure 239.
5. With the tool in place, torque the two bolts to 7 N·m (60 in.lb.).
6. Install the transaxle external manual shift lever, as shown in Figure 240, install washer and nut and torque nut to 38 N·m (28 ft.lb.).
7. Install both cooler line banjo fittings, with new washers, as shown in Figure 240, and torque cooler line banjo bolts to 34 N·m (25 ft.lb.).

Continued on Page 125

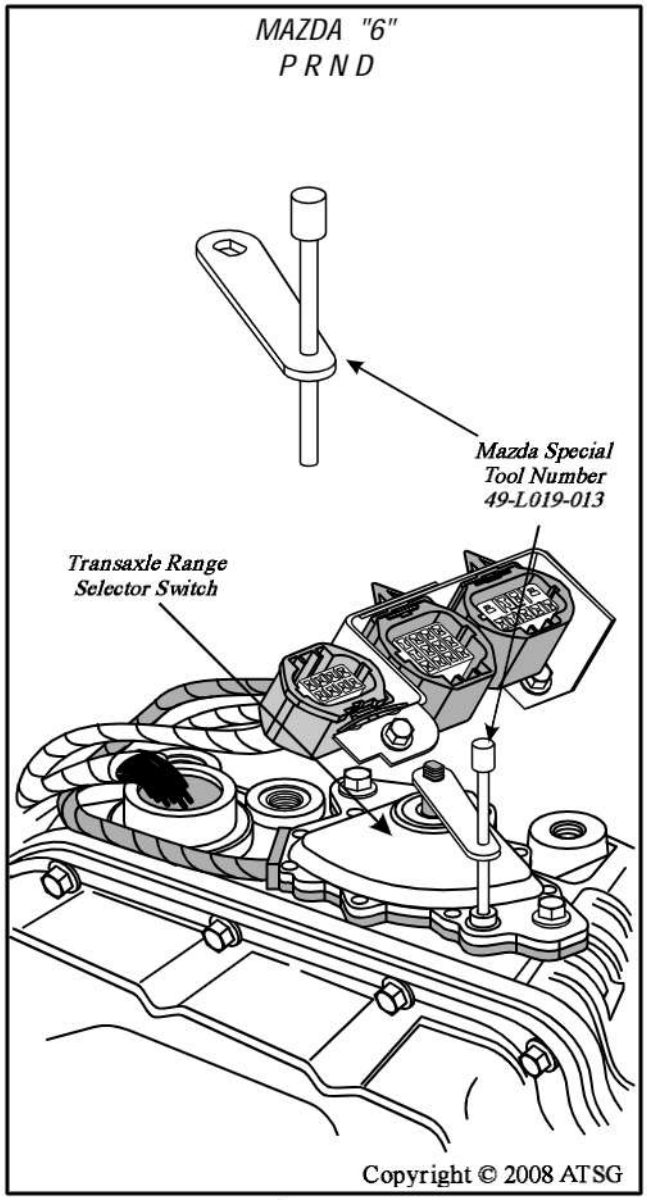

Figure 239

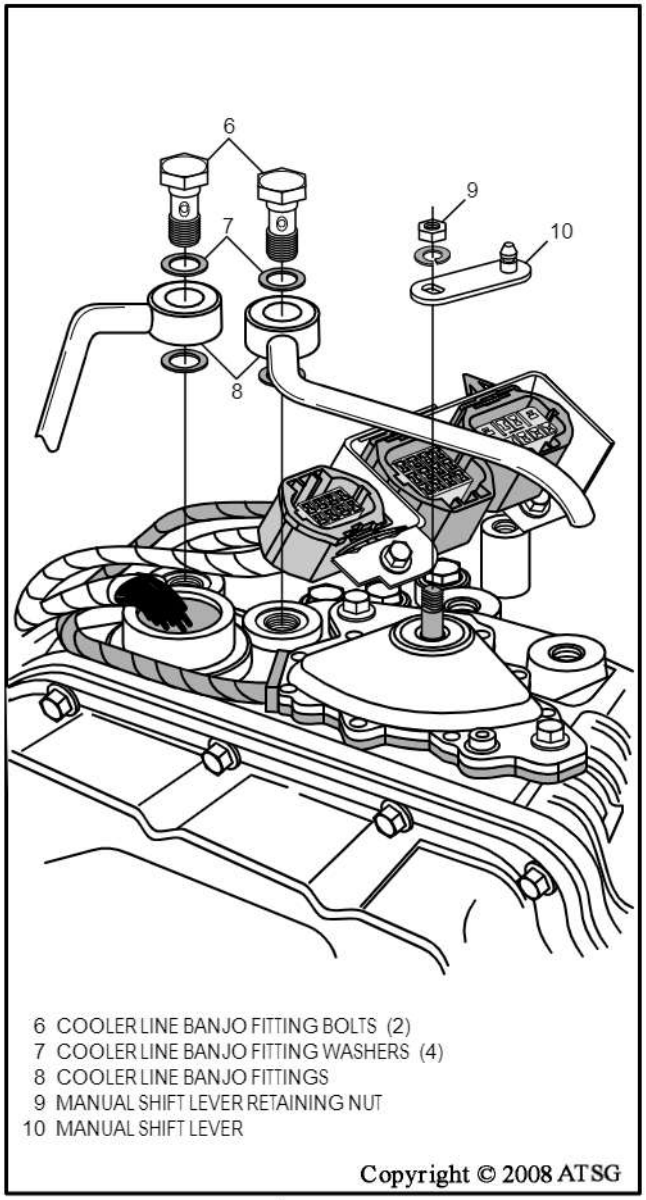

Figure 240

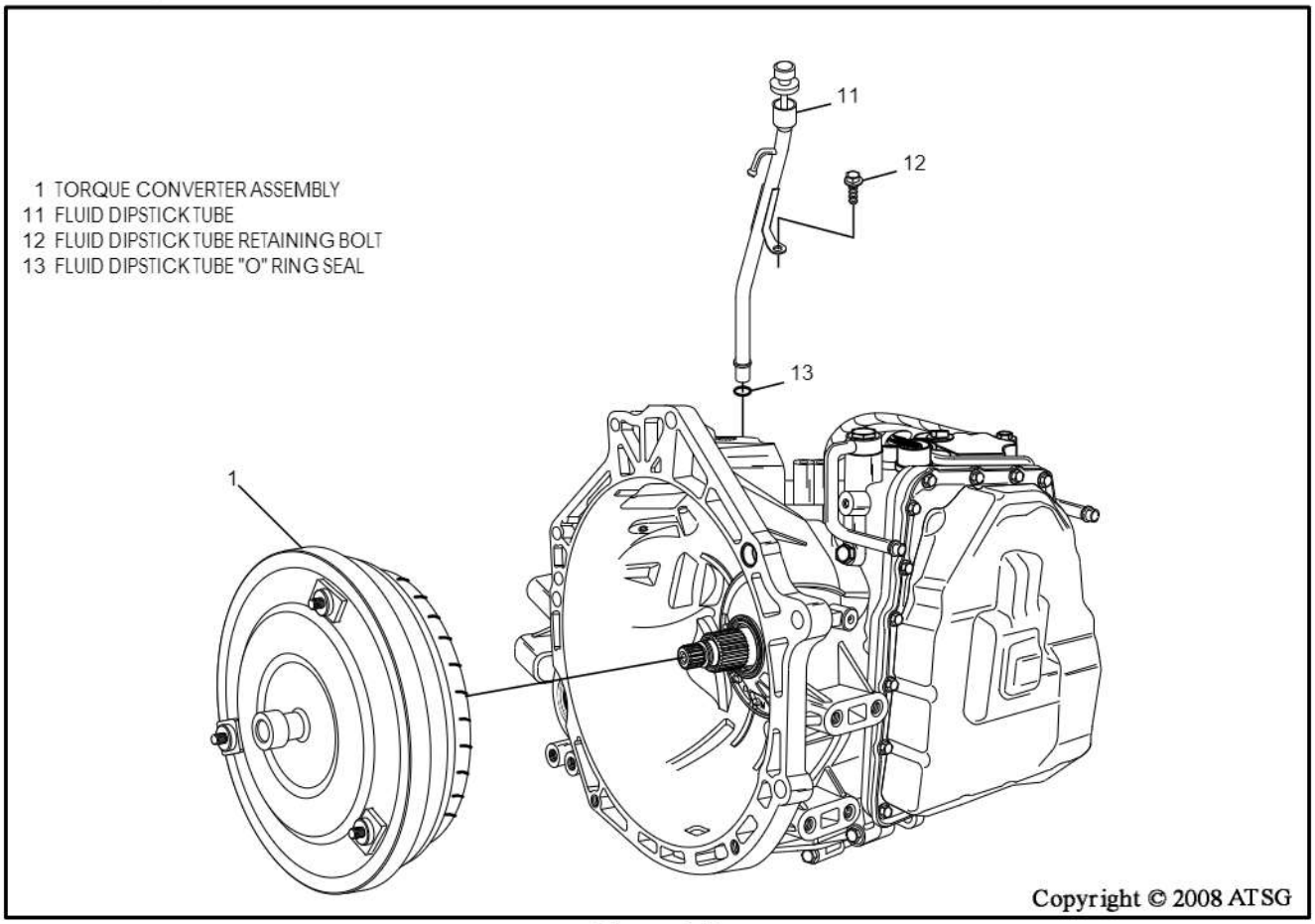

Figure 241

FINAL TRANSAXLE ASSEMBLY (CONT'D)

External Parts

8. Install new "O" ring on dipstick tube, as shown in Figure 241, and lube with a small amount of Trans-Jel®.
9. Install the dipstick and tube assembly, as shown in Figure 241, and torque the retaining bolt to 10 N·m (90 in.lb.).
10. Prime the torque converter with 2-3 quarts of the appropriate ATF, to soak converter clutch a minimum of 15 minutes prior to installation.
11. Install the torque converter assembly, using a rotating motion so as to engage oil pump gear, as shown in Figure 241.

    Caution: Ensure that you have a minimum of 18.0 mm (.709") between the bell housing surface and the 1st shoulder on the converter, as shown in Figure 242.

"CONGRATULATIONS YOU ARE FINISHED"

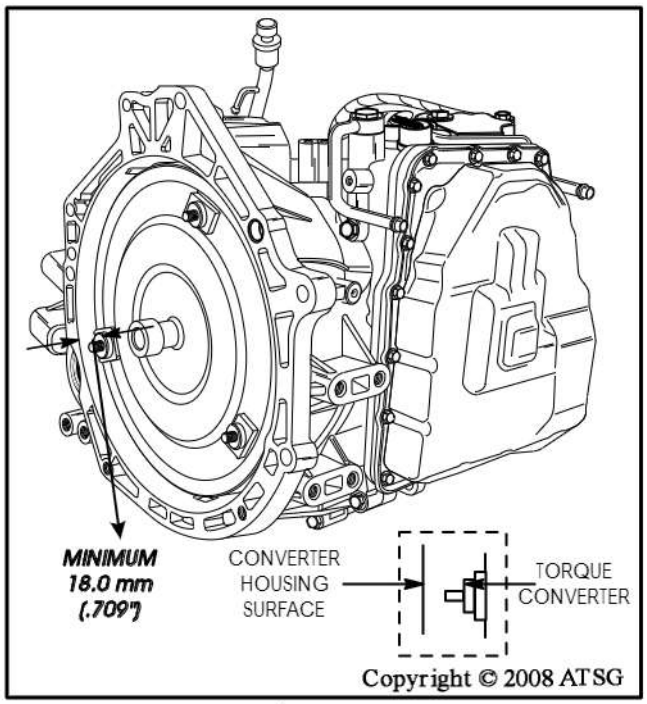

Figure 242

THRUST BEARING AND THRUST BEARING RACE IDENTIFICATION

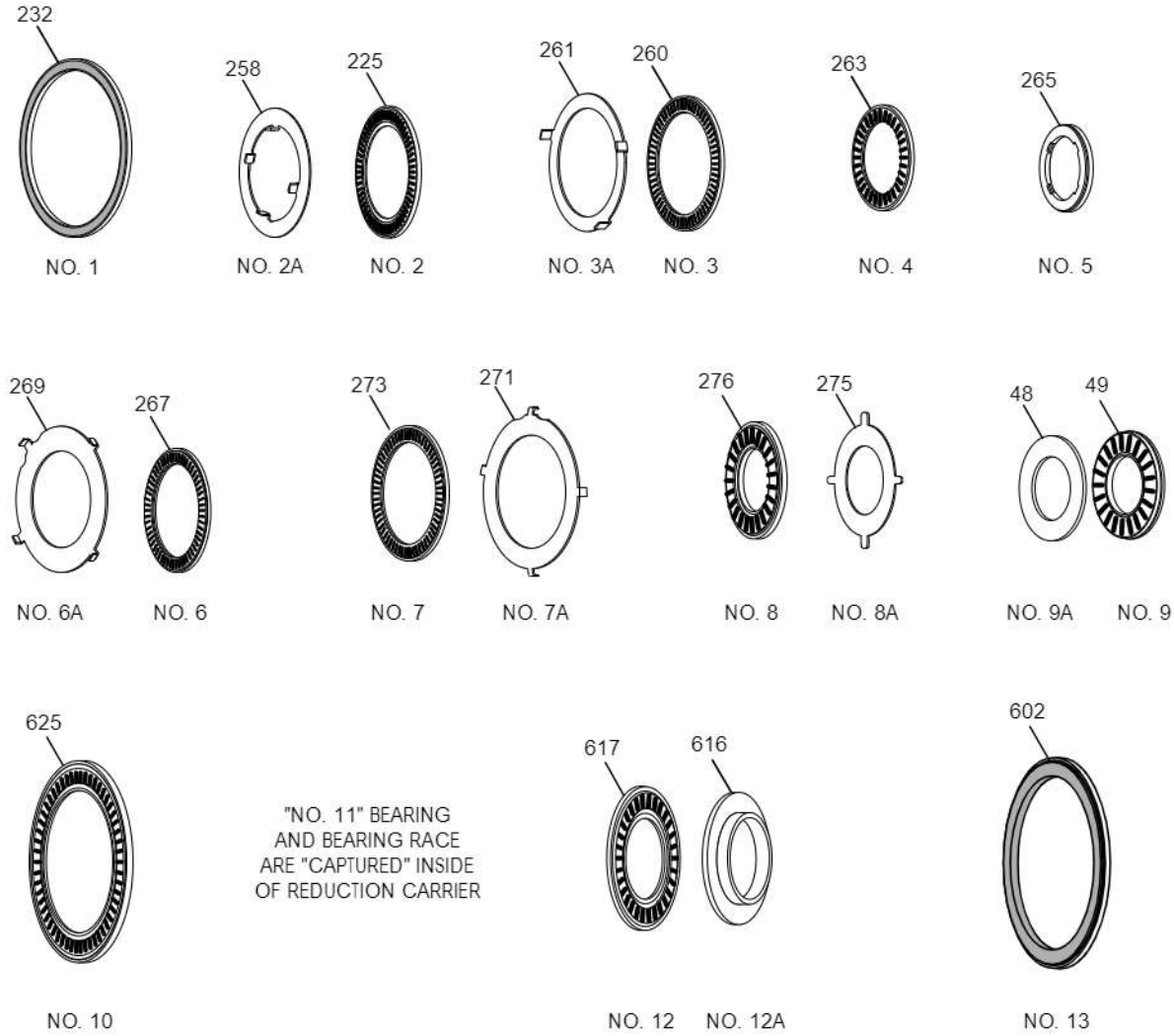

NO. 1 LOW CLUTCH HOUSING TO CASE THRUST BEARING (ILLUSTRATION NO. 232)
NO. 2 LOW CLUTCH SUPPORT TO LOW CLUTCH HUB/RING GEAR THRUST BEARING (ILLUSTRATION NO. 225)
NO. 2A LOW CLUTCH HUB/RING GEAR TO SUPPORT THRUST BEARING RACE (ILLUSTRATION NO. 258)
NO. 3 LOW CLUTCH HUB/RING GEAR TO OUTPUT CARRIER THRUST BEARING (ILLUSTRATION NO. 260)
NO. 3A OUTPUT CARRIER TO LOW CLUTCH HUB/RING GEAR THRUST BEARING RACE (ILLUSTRATION NO. 261)
NO. 4 OUTPUT CARRIER TO OUTPUT SUN GEAR THRUST BEARING (ILLUSTRATION NO. 263)
NO. 5 OUTPUT SUN GEAR TO INPUT CARRIER THRUST BEARING (ILLUSTRATION NO. 265)
NO. 6 INPUT CARRIER TO INPUT SUN GEAR THRUST BEARING (ILLUSTRATION NO. 267)
NO. 6A INPUT SUN GEAR TO INPUT CARRIER THRUST BEARING RACE (ILLUSTRATION NO. 269)
NO. 7 INPUT SUN GEAR TO HIGH CLUTCH HUB THRUST BEARING RACE (ILLUSTRATION NO. 273)
NO. 7A INPUT SUN GEAR TO HIGH CLUTCH HUB THRUST BEARING (ILLUSTRATION NO. 271)
NO. 8 HIGH CLUTCH HUB TO HIGH AND REVERSE CLUTCH HOUSING THRUST BEARING (ILLUSTRATION NO. 276)
NO. 8A HIGH CLUTCH HUB TO HIGH AND REVERSE CLUTCH HOUSING THRUST BEARING RACE (ILLUSTRATION NO. 275)
NO. 9 HIGH AND REVERSE CLUTCH HOUSING TO END COVER THRUST BEARING (ILLUSTRATION NO. 49)
NO. 9A HIGH AND REVERSE CLUTCH HOUSING TO END COVER *"SELECTIVE"* THRUST BEARING RACE (ILLUSTRATION NO. 48)
NO. 10 DIFFERENTIAL PINION GEAR TO CONVERTER HOUSING THRUST BEARING (ILLUSTRATION NO. 625)
NO. 11 THE NUMBER 11 THRUST BEARING AND THRUST BEARING RACE ARE "CAPTURED" INSIDE OF THE REDUCTION CARRIER ASSEMBLY
NO. 12 REDUCTION SUN GEAR TO DIRECT CLUTCH HOUSING SUPPORT THRUST BEARING (ILLUSTRATION NO. 617)
NO. 12A REDUCTION SUN GEAR TO DIRECT CLUTCH HOUSING SUPPORT THRUST BEARING RACE (ILLUSTRATION NO. 616)
NO. 13 DIRECT CLUTCH HOUSING TO DIRECT CLUTCH HOUSING SUPPORT THRUST BEARING (ILLUSTRATION NO. 602)

Copyright © 2008 ATSG

Figure 243

TORQUE SPECIFICATIONS			
DESCRIPTION	N·M	FT.LB.	IN.LB.
OIL FILTER	22	16	
OIL PUMP TO CASE	22	16	
CONVERTER HOUSING TO CASE	30	22	
END COVER TO CASE	22	16	
CASE TO DIRECT CLUTCH SUPPORT	38	28	
CASE TO LOW CLUTCH SUPPORT	9		80
VALVE BODY BOLTS (ALL)	9		80
SIDE COVER TO CASE	10		90
BAND ANCHOR	82	60	
BAND ADJUSTING NUT	50	36	
OIL PIPE AND BAFFLE BOLTS	9		80
ATF DRAIN PLUG	54	40	
OIL PRESSURE TEST PLUGS	9		80
TORQUE CONVERTER NUTS	62	45	
FLYWHEEL TO CRANKSHAFT BOLTS	87	64	
SPEED SENSORS (ALL)	9		80
TRANSAXLE RANGE SWITCH	7		60
SPANNER NUT ON TRANSFER GEAR "A"	40	35	
REDUCTION PLANETARY ASSEMBLY NUT	62	45	
MANUAL SHAFT NUT	38	28	
COOLER LINE BANJO BOLTS	34	25	

Copyright © 2008 ATSG

Figure 244

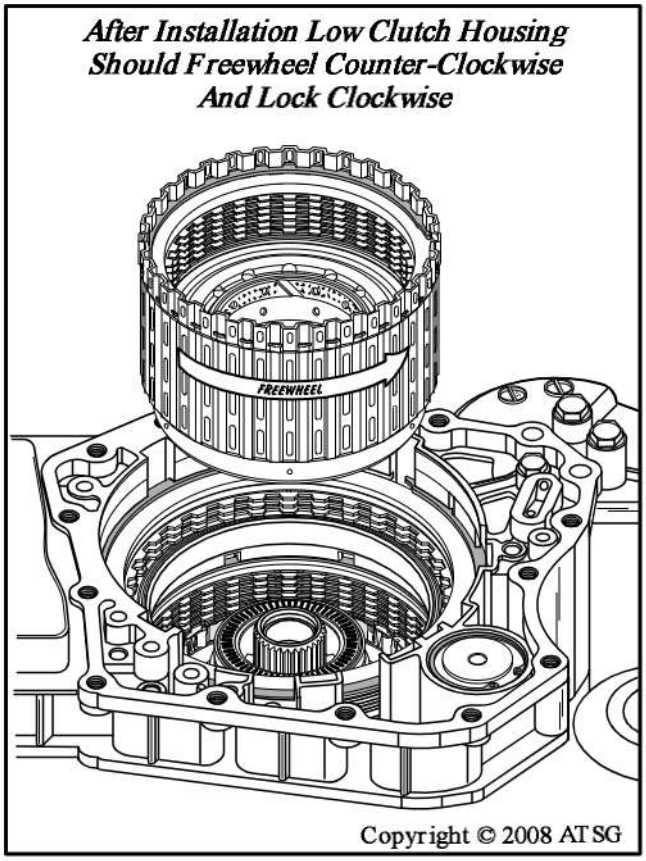

Figure 245

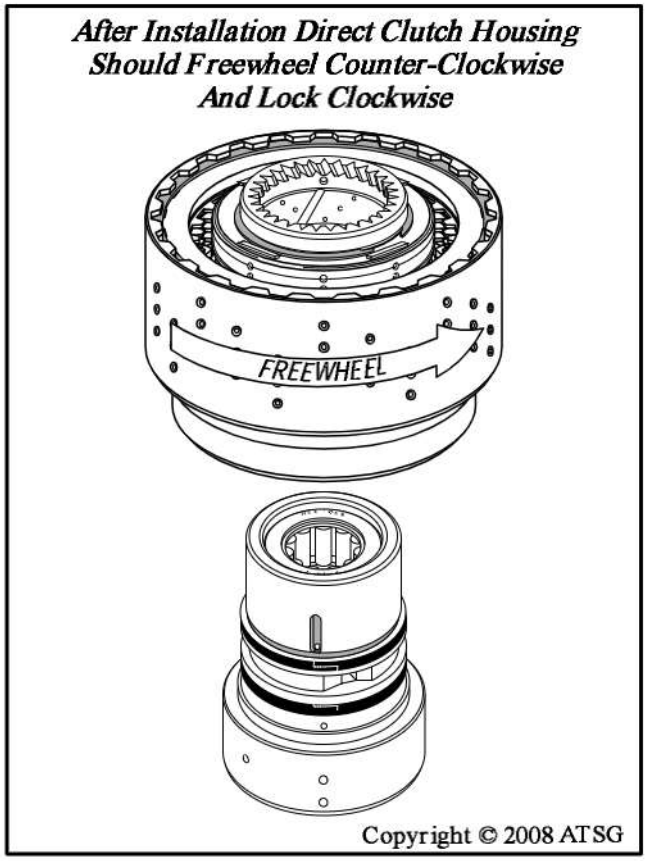

Figure 246

A VERY HEARTY "THANK YOU" TO FRANK KUPERMAN OF

PHOENIX REMANUFACTURED TRANSMISSIONS

7310 W. Roosevelt Phoenix, AZ 85043

FOR SUPPLYING US WITH THE TRANSMISSIONS THAT MADE
THE ILLUSTRATIONS IN THIS BOOKLET POSSIBLE.

PHXRETRANS
Phoenix Remanufactured Transmissions

PLEASE FEEL FREE TO CALL TODAY

1 (623) 936-1500

WE HAVE WHAT YOU NEED FOR
"ALL" YOUR TRANSMISSION NEEDS!